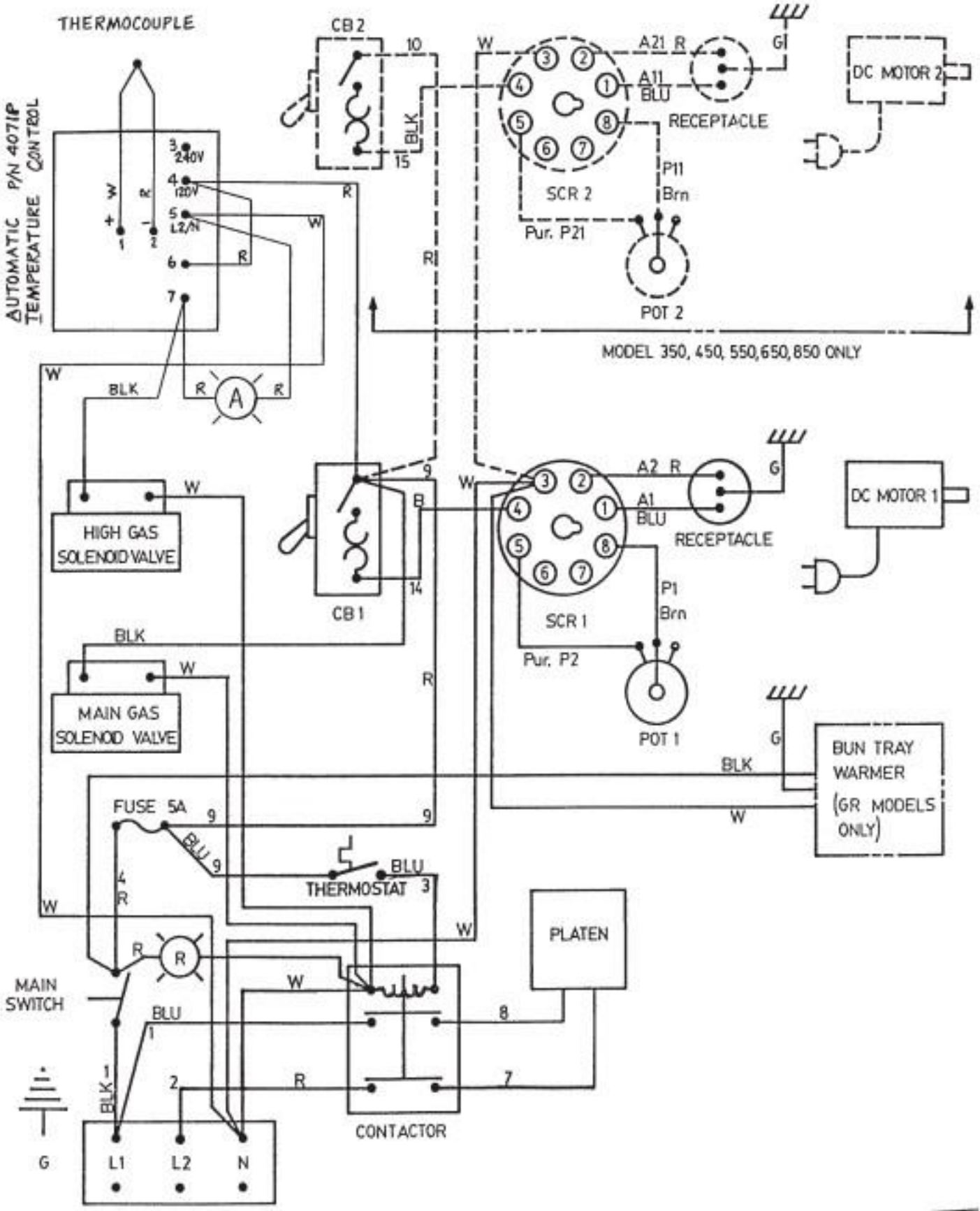
THERMOCOUPLE
AUTOMATIC TEMPERATURE CONTROL P/N 4071P
CB 2
10
15
BLK
W
A21 R
A11 BLU
G
RECEPTACLE
DC MOTOR 2
SCR 2
P11 Brn
Pur. P21
POT 2
MODEL 350, 450, 550, 650, 850 ONLY
240V
120V
L2/N
R
W
BLK
A
HIGH GAS SOLENOID VALVE
CB 1
9
14
B
A2 R
A1 BLU
DC MOTOR 1
SCR 1
P1 Brn
Pur. P2
POT 1
MAIN GAS SOLENOID VALVE
BUN TRAY WARMER (GR MODELS ONLY)
FUSE 5A
BLU
THERMOSTAT
3
4
PLATEN
MAIN SWITCH
1
2
8
7
CONTACTOR
G
L1
L2
N

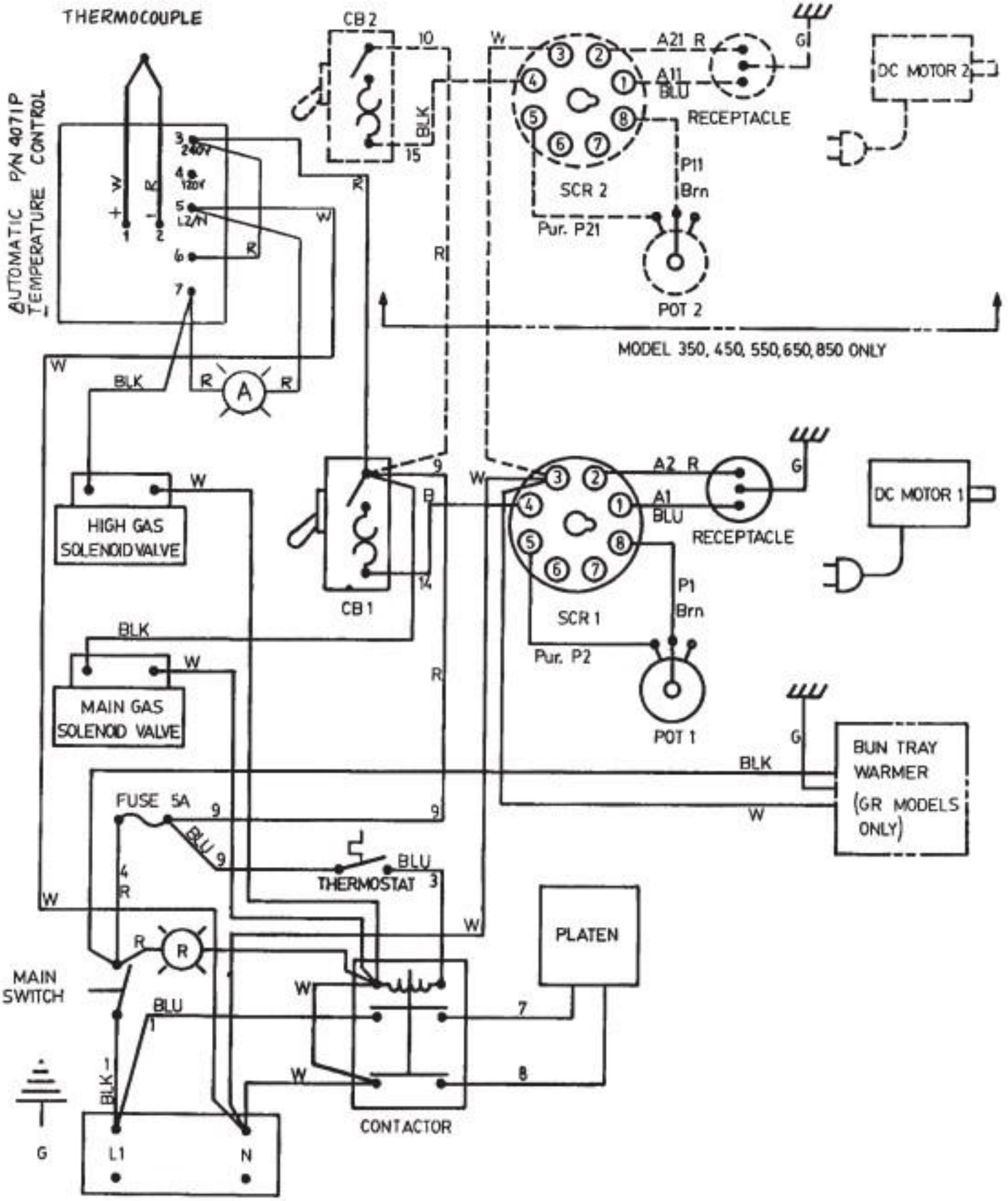
THERMOCOUPLE
AUTOMATIC TEMPERATURE CONTROL P/N 4071P
CB 2
10
15
BLK
W
A21 R
A11 BLU
G
RECEPTACLE
DC MOTOR 2
SCR 2
P11 Brn
Pur. P21
POT 2
MODEL 350, 450, 550, 650, 850 ONLY
240V
120V
L2/N
R
A
HIGH GAS SOLENOID VALVE
CB 1
9
14
A2 R
A1 BLU
RECEPTACLE
DC MOTOR 1
SCR 1
P1 Brn
Pur. P2
POT 1
MAIN GAS SOLENOID VALVE
BUN TRAY WARMER (GR MODELS ONLY)
FUSE 5A
THERMOSTAT
PLATEN
MAIN SWITCH
CONTACTOR
L1
N