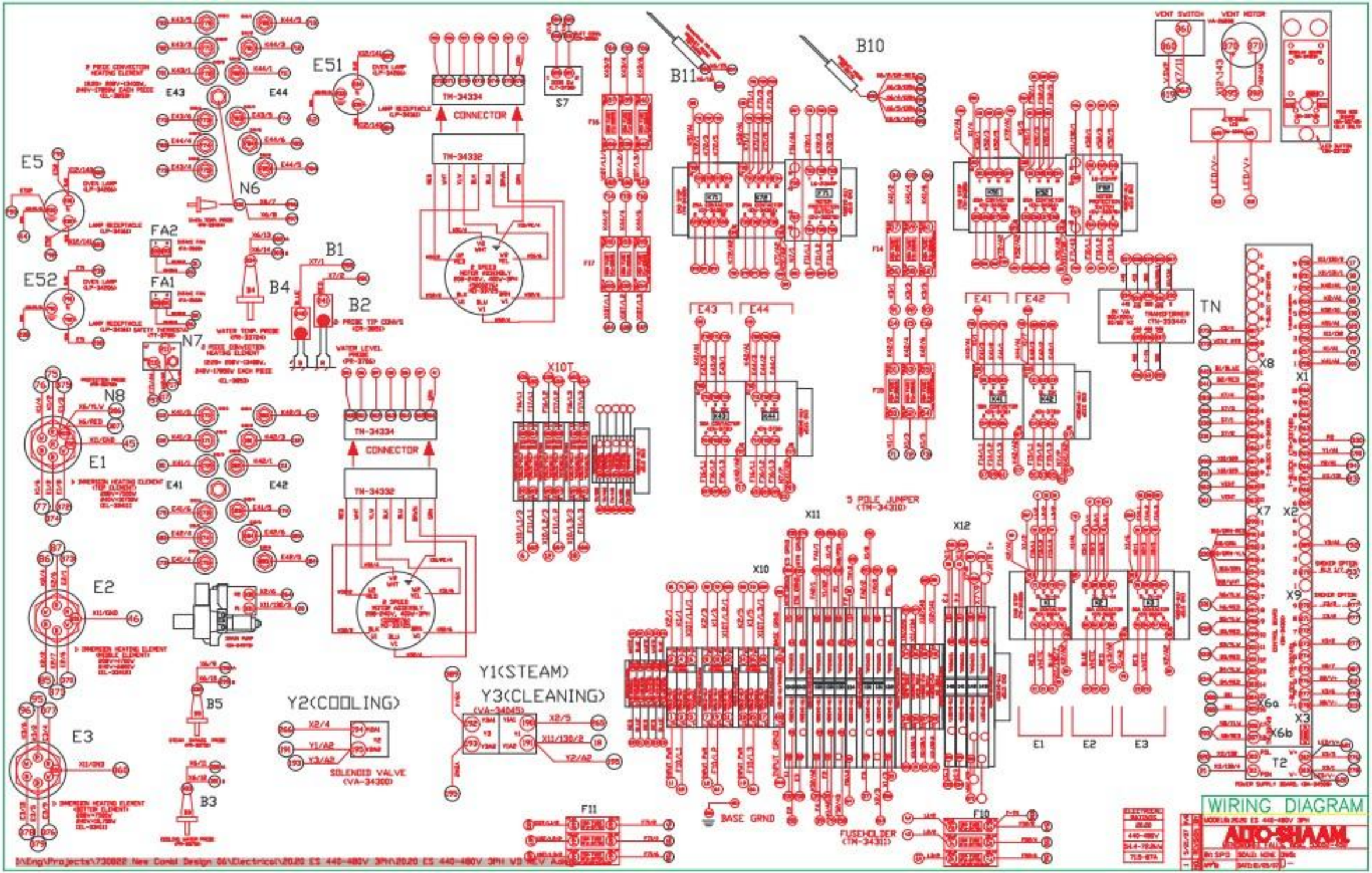
WIRING DIAGRAM
ALTO-SHAAM
E51
E5
E52
E43
E44
E41
E42
E1
E2
E3
N6
N7
N8
FA2
FA1
B1
B2
B3
B4
B5
B10
B11
S7
TN-34334
CONNECTOR
TN-34332
X10T
X10
X11
X12
5 POLE JUMPER
(TN-34310)
Y1(STEAM)
Y3(CLEANING)
(VA-34045)
Y2(COOLING)
SOLENOID VALVE
(VA-34300)
BASE GRND
FUSEHOLDER
(TN-34311)
F11
F10
TN
X8
X1
X7
X2
X9
X6a
X6b
X3
T2
VENT SWITCH
VENT MOTOR
LED/V-
LED/V+

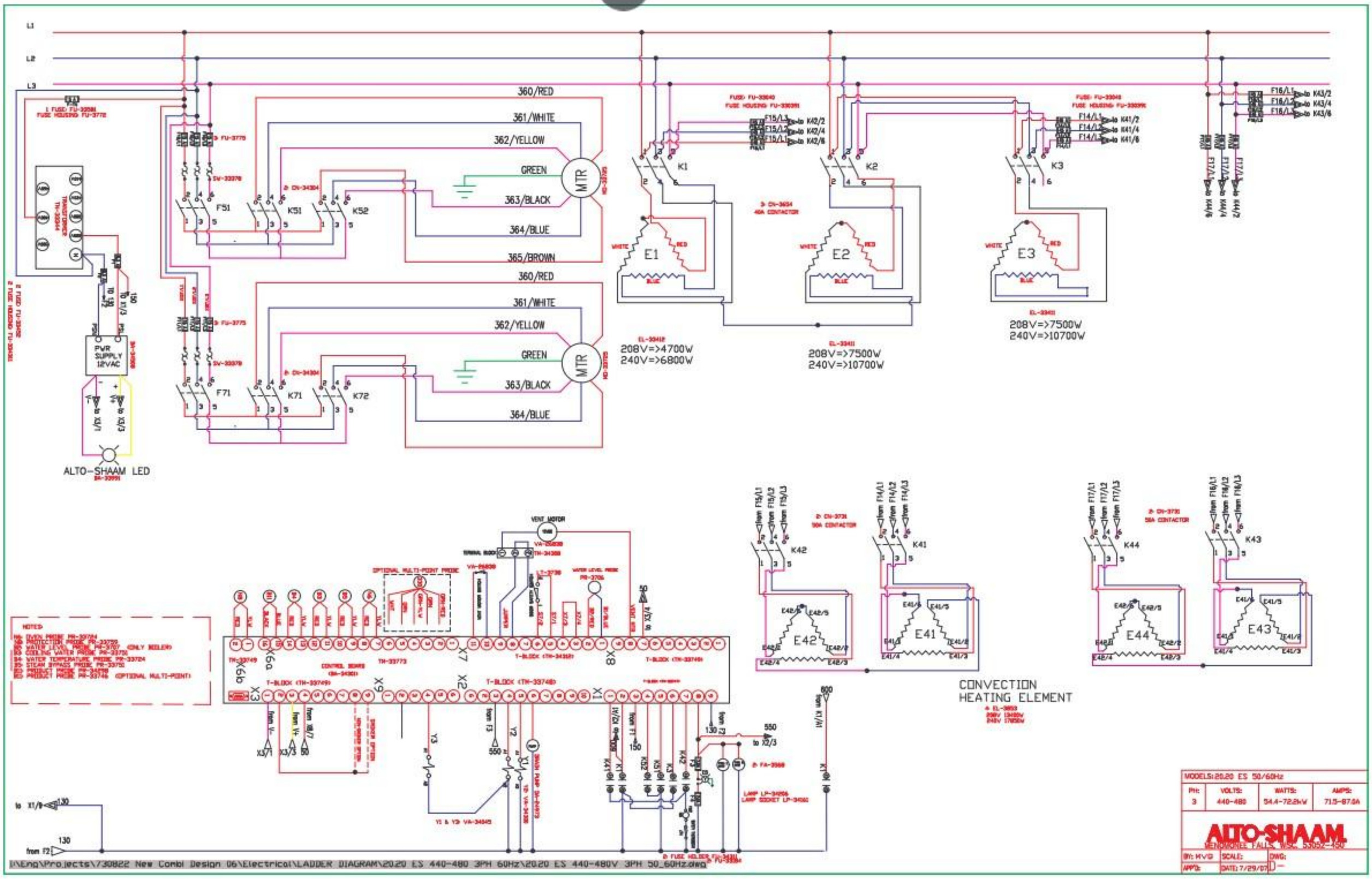
L1
L2
L3
360/RED
361/WHITE
362/YELLOW
GREEN
363/BLACK
364/BLUE
365/BROWN
MTR
F51
K51
K52
F71
K71
K72
K1
K2
K3
E1
E2
E3
208V=>4700W
240V=>6800W
208V=>7500W
240V=>10700W
208V=>7500W
240V=>10700W
PWR SUPPLY 12VAC
ALTO-SHAAM LED
K42
K41
K44
K43
E42
E41
E44
E43
CONVECTION HEATING ELEMENT
VENT MOTOR
X3
X6a
X7
X8
X9
X2
X1
T-BLOCK (TN-33749)
T-BLOCK (TN-33748)
T-BLOCK (TN-33773)
CONTROL BOARD
NOTES
MODELS: 20.20 ES 50/60Hz
PH: 3
VOLTS: 440-480
WATTS: 54.4-72.8kW
AMPS: 71.5-87.6A
ALTO-SHAAM
MENOMONEE FALLS, WISC. 53052-450
BY: HVG
SCALE:
DWG:
APP'D:
DATE: 7/29/07
I:\Eng\Projects\730822 New Combi Design 06\Electrical\LADDER DIAGRAM\20.20 ES 440-480 3PH 60Hz\20.20 ES 440-480V 3PH 50_60Hz.dwg