ALTO-SHAAM®

GAS FRYER

FryTech Series

ecosmart®

ASF-60G shown with optional automatic basket lifts

ASF-60G and ASF-75G Gas Fryers with Deluxe Control

ASF-75G shown with optional automatic basket lifts

- INSTALLATION
- OPERATION
- MAINTENANCE

FryTech™

24•7 Your Service Hotline 1-800-558-8744

W164 N9221 Water Street • P.O. Box 450 • Menomonee Falls, Wisconsin 53052-0450 USA
PHONE: 262.251.3800 • 800.558.8744 USA/CANADA FAX: 262.251.7067 • 800.329.8744 U.S.A. ONLY
www.alto-shaam.com

PRINTED IN U.S.A.

MN-28856 • 09/10

Delivery 1
Unpacking 1
Safety Procedures and Precautions 2

Installation
Installation Requirements 3-11
Dimension Drawings, weights & capacities 3-4
Clearance Requirements 5
Site Installation & Leveling 6
Ventilation 7
Gas Specifications 8
Gas Connection 9
Restraint Requirements - Mobile Equipment 10
Electrical Specifications 11

Operating Instructions
Oil/Shortening Requirements 12
Controls Behind Access Panel 13
Boil-Out Instructions 14-15
Start-Up & General Operation 16
Oil Filtration (For units with installed option) 17-20
Suggested Frying Times 21-22
Cleaning & Maintenance 23
Basic Control Operation 24-41

Service
Service Troubleshooting 42-44
Extended Limited Frypot Warranty 45
ASF-75G Service Views 46-51
ASF-60G Service Views 52-55

Wire Diagrams
ASF-75G, 120V 56
ASF-75G, 230V 57
ASF-60G, 120V 58
ASF-60G, 230V 59

Warranty
Transportation Damage and Claims Back Cover
Limited Warranty Back Cover

DELIVERY

This Alto-Shaam appliance has been thoroughly tested and inspected to ensure only the highest quality unit is provided. Upon receipt, check for any possible shipping damage and report it at once to the delivering carrier. ***See Transportation Damage and Claims section located in this manual.***

This appliance, complete with unattached items and accessories, may have been delivered in one or more packages. Check to ensure that all standard items and options have been received with each model as ordered.

Save all the information and instructions packed with the appliance. Complete and return the warranty card to the factory as soon as possible to ensure prompt service in the event of a warranty parts and labor claim.

This manual must be read and understood by all people using or installing the equipment model. Contact the Alto-Shaam Tech Team Service Department if you have any questions concerning installation, operation, or maintenance.

NOTE: All claims for warranty must include the full model number and serial number of the unit.

UNPACKING

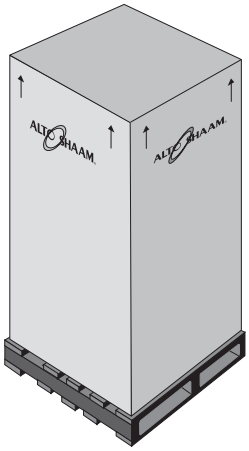

1. Carefully remove the appliance from the carton or crate.

   NOTE: Do not discard the carton and other packaging material until you have inspected the unit for hidden damage and tested it for proper operation.

2. Read all instructions in this manual carefully before initiating the installation of this appliance.

   DO NOT DISCARD THIS MANUAL.
   This manual is considered to be part of the appliance and is to be provided to the owner or manager of the business or to the person responsible for training operators. ***Additional manuals are available from the Alto-Shaam Tech Team Service Department.***

3. Remove all protective plastic film, packaging materials, and accessories from the appliance before connecting electrical power. Store any accessories in a convenient place for future use.

DANGER

BEFORE STARTING THE APPLIANCE, MAKE CERTAIN YOU DO NOT DETECT THE ODOR OF GAS.

IF THE ODOR OF GAS IS DETECTED:

- **DO NOT attempt to light any appliance.**
- **DO NOT touch any electrical switches.**
- **Extinguish any open flame.**
- **Use a telephone OUTSIDE THE PROPERTY & IMMEDIATELY contact your gas supplier.**
- **If unable to contact your gas supplier, contact the fire department.**

WARNING

In the event of loss of power to the appliance, turn the "burner control knobs" to the OFF position. Remove food product from the unit. If burner control fails to extinguish the flame, shut off main gas valve located in rear of unit.

KEEP THIS MANUAL IN A CONVENIENT LOCATION FOR REFERENCE.

INSTALLATION

SAFETY PROCEDURES AND PRECAUTIONS

Knowledge of proper procedures is essential to the safe operation of electrically and/or gas energized equipment. In accordance with generally accepted product safety labeling guidelines for potential hazards, the following signal words and symbols may be used throughout this manual.

DANGER

Used to indicate the presence of a hazard that WILL cause severe personal injury, death, or substantial property damage if the warning included with this symbol is ignored.

WARNING

Used to indicate the presence of a hazard that CAN cause personal injury, possible death, or major property damage if the warning included with this symbol is ignored.

CAUTION

Used to indicate the presence of a hazard that can or will cause minor or moderate personal injury or property damage if the warning included with this symbol is ignored.

CAUTION

Used to indicate the presence of a hazard that can or will cause minor personal injury, property damage, or a potential unsafe practice if the warning included with this symbol is ignored.

NOTE: Used to notify personnel of installation, operation, or maintenance information that is important but not hazard related.

1. This appliance is intended to cook, hold or process foods for the purpose of human consumption. No other use for this appliance is authorized or recommended.
2. This appliance is intended for use in commercial establishments where all operators are familiar with the purpose, limitations, and associated hazards of this appliance. Operating instructions and warnings must be read and understood by all operators and users.
3. Any troubleshooting guides, component views, and parts lists included in this manual are for general reference only and are intended for use by qualified technical personnel.
4. This manual should be considered a permanent part of this appliance. This manual and all supplied instructions, diagrams, schematics, parts lists, notices, and labels must remain with the appliance if the item is sold or moved to another location.

NOTE

For equipment delivered for use in any location regulated by the following directive:

DO NOT DISPOSE OF ELECTRICAL OR ELECTRONIC EQUIPMENT WITH OTHER MUNICIPAL WASTE.

ASF-75G SPECIFICATIONS

DIMENSIONS EXTERIOR (H x W x D)
ASF-75G WITHOUT FILTRATION OR LIFTS
44-13/16" x 24-13/16" x 37-7/16" (1138mm x 629mm x 951mm)
ASF-75G WITH FILTRATION AND LIFTS
44-13/16" x 24-13/16" x 38-11/16 (1138mm x 629mm x 983mm)
BASKET DIMENSIONS (H x W x D)
6" x 9-3/16" x 14-3/16" (152mm x 232mm x 337mm)

CAPACITY
SHORTENING/OIL:
73 lb (33 kg) MAXIMUM
LOAD CAPACITY:
13 lb (6 kg) MAXIMUM

WEIGHT EST.		
NET WEIGHT:	360 lb	(163 kg)
SHIP WEIGHT:	520 lb	(236 kg)
CARTON DIMENSIONS: H x W x D		
57" x 34" x 47"		
(1448mm x 864mm x 1194mm)		

STANDARD ACCESSORIES	
☐ Basket, Half-Size (2 INCLUDED AS STANDARD)	BS-27140
Brush Set (ONE 3-BRUSH SET INCLUDED AS STANDARD)	
☐ SCRUB BRUSH	BH-28693
☐ STRAIGHT BRUSH	BH-28691
Filter, Paper (7 PAPER FILTERS INCLUDED AS STANDARD)	
☐ 7 COUNT REFILL PACKAGE	FI-27791
☐ 100 COUNT REFILL PACKAGE	FI-27794

OPTIONS	
☐ Basket, Full-Size (48 CHICKEN PIECE CAPACITY)	BS-26998
FILTERS	
☐ Charcoal/Carbon (30 COUNT PKG.)	FI-27648
☐ Reusable Mesh (SINGLE FILTER)	FI-27014
☐ Fry Pot Cover	5005136
☐ Mobile Drawer Cover	5006073
☐ Strainer/Skimmer	CE-27400
☐ Oil Discard Hose	HO-27686
☐ Banking Strip (1 STRIP REQ'D FOR EVERY 2 BANKED FRYERS)	5008809
☐ Mobile Oil Caddy	TO-28359
☐ Pre-filter Sieve Kit (FOR OIL FILTRATION SYSTEM)	5010451

ASF-75G WITH LIFTS AND FILTRATION

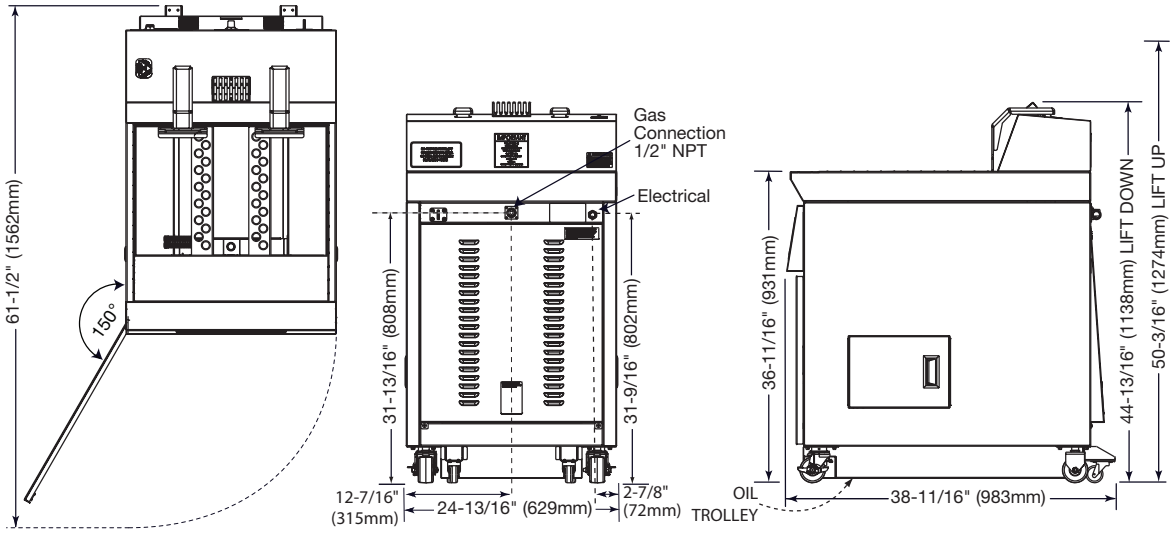

INSTALLATION

ASF-60G SPECIFICATIONS

DIMENSIONS EXTERIOR (H X W X D)
44-3/4″ x 15-3/4″ x 33-5/8″ (1136mm x 400mm x 853mm)
BASKET DIMENSIONS (H X W X D)
5-3/16″ x 5-7/8″ x 13-13/16″ (131mm x 149mm x 328mm)

CAPACITY
SHORTENING/OIL: 62 lb (28 kg) MAXIMUM
LOAD CAPACITY: 8 lb (4 kg) MAXIMUM

WEIGHT	
NET WEIGHT:	248 lb (113 kg)
SHIP WEIGHT:	330 lb (150 kg) EST
CARTON DIMENSIONS:	39″ x 22″ x 55″ EST
H X W X D	(991mm x 559mm x 1397mm) EST

STANDARD ACCESSORIES	
☐ Basket, Half-Size (2 INCLUDED AS STANDARD)	BS-27963
Brush Set (ONE 3-BRUSH SET INCLUDED AS STANDARD)	
☐ SCRUB BRUSH	BH-28693
☐ STRAIGHT BRUSH	BH-28691

OPTIONS	
☐ Fry Pot Cover	5007596
☐ Strainer/Skimmer	CE-27400
☐ Banking Strip (1 STRIP REQ'D FOR EVERY 2 BANKED FRYERS)	1009367
☐ Mobile Oil Caddy	TO-28359

ASF-60G WITH LIFTS

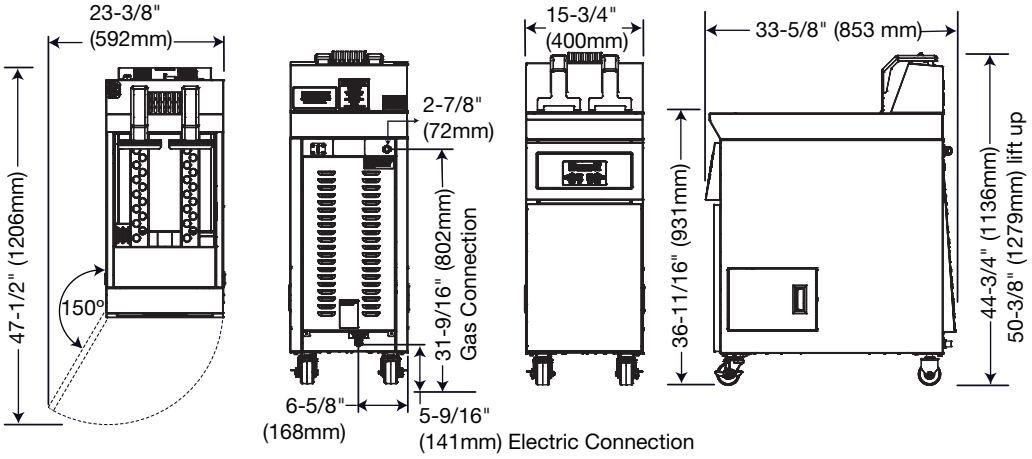

DANGER

IMPROPER INSTALLATION, ALTERATION, ADJUSTMENT, SERVICE, OR MAINTENANCE COULD RESULT IN SEVERE INJURY, DEATH, OR CAUSE PROPERTY DAMAGE.

READ THE INSTALLATION, OPERATING AND MAINTENANCE INSTRUCTIONS THOROUGHLY BEFORE INSTALLING OR SERVICING THIS EQUIPMENT.

DANGER

AVERTISSEMENT : UNE INSTALLATION, UN AJUSTEMENT, UNE ALTÉRATION, UN SERVICE OU UN ENTRETIEN NON CONFORME AUX NORMES PEUT CAUSER DES DOMMAGES À LA PROPRIÉTÉ, DES BLESSURES OU LA MORT.

LIRE ATTENTIVEMENT LES DIRECTIVES D'OPÉRATION ET D'ENTRETIEN AVANT DE FAIRE L'INSTALLATION, OU L'ENTRETIEN DE CET ÉQUIPEMENT.

CAUTION

CAUTION!
HOT SURFACE

METAL PARTS OF THIS EQUIPMENT BECOME EXTREMELY HOT WHEN IN OPERATION. TO AVOID BURNS, ALWAYS USE HAND PROTECTION WHEN OPERATING THIS APPLIANCE.

SITE INSTALLATION

NOTE: To avoid equipment damage, remove the Mobile Oil Trolley before moving this appliance with a forklift or pallet lift.

MINIMUM CLEARANCE REQUIREMENTS

	COMBUSTIBLE SURFACES	NON-COMBUSTIBLE SURFACES
RIGHT SIDE	0″ (0mm)	0″ (0mm)
LEFT SIDE	0″ (0mm)	0″ (0mm)
BACK	6″ (152mm)	6″ (152mm)
635mm)		

PLUS: 6″ (152mm) minimum between the element swing in the extended position and the lower edge of the exhaust hood and filter media.

ENTRY CLEARANCE: 30″ (762mm) UNCRATED

Ne pas installer à une distance inférirure à celle indiquée ce-dessous d'une parol en matiére combustible: Côtés 6 pouches, Arriére 6 pouches.

CAUTION

DO NOT USE FORKLIFT FROM FRONT OR REAR OF UNIT. USE FORKLIFT FROM SIDE ONLY.

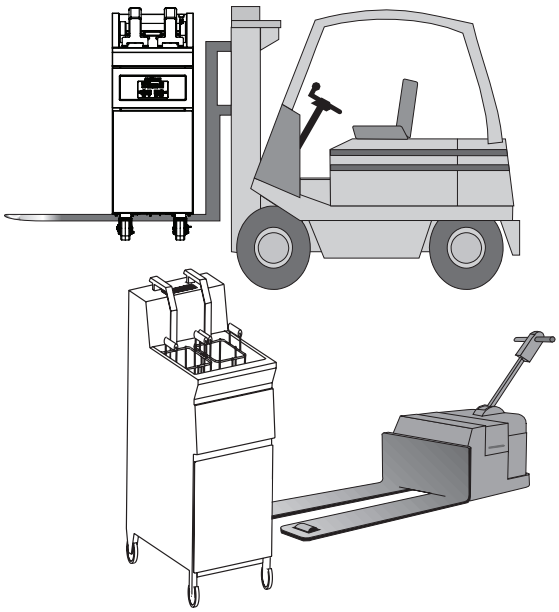

WARNING

MINIMUM CLEARANCES MUST REMAIN UNOBSTRUCTED.
DO NOT place insulation or any other type of materials in clearance areas.

INSTALLATION

SITE INSTALLATION

1. It is the responsibility of the installer to verify that this fryer installation is in compliance with the specifications listed in this manual and with local code requirements.
2. Hood installation is required.
3. Both cooking and cleaning functions require unobstructed access. The frypot, control panel, and front access door must be maintained free from obstruction. The access door must be accessible for service and maintenance.
4. Locate the fryer on a firm, level surface ONLY. The area surrounding the fryer must be kept clear of all combustible materials.
5. **FOR YOUR SAFETY DO NOT** store or use any flammable liquids or allow flammable vapors in the vicinity of this fryer or any other appliance.
6. **FOR YOUR SAFETY DO NOT place insulation or any other type of materials in clearance areas.**
7. When properly installed, the electric fryer is designed for operation adjacent to non-combustible floors and walls with a 6" clearance at the back. Clearances from all combustible construction is a minimum of 6" (152mm) at the back and both sides. Concrete, tile, terrazzo, or metal surfaces are recommended. Metal over a combustible material may not meet code for non-combustible surfaces. Verify site selection with local codes for specific requirements.
   Doit être utilisé seulement sur des planchers non inflammables.
8. Adequate means must be provided to limit the movement of this appliance. A restraining device is required for field installation.

DANGER

To avoid electrical shock, this appliance MUST be adequately grounded in accordance with local electrical codes or, in the absence of local codes, with the current edition of the National Electrical Code ANSI/ NFPA No. 70. In Canada, all electrical connections are to be made in accordance with CSA C22.1, Canadian Electrical Code Part 1 or local codes.

9. DO NOT install this fryer in any area where it may be affected by any adverse conditions such as steam or dripping water, etc. DO NOT install the fryer over a drain.
10. **LEVELING:** Make certain the fryer is positioned firmly on all four supporting casters. Level fryer front-to-back and side-to-side by holding lower collar (#2) while twisting upper collar (#1). Restraining ties can be used for stabilization if necessary. Use an allen wrench (#3) to lock caster in position.

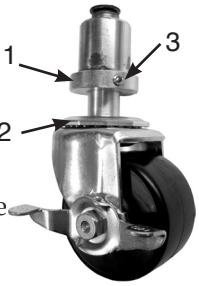

WARNING

BURN WARNING: Make certain the fryer is stabilized before operation to prevent any movement or tipping and the possibility of severe burns caused by hot, splashing shortening or oil.

CAUTION

TO PREVENT PERSONAL INJURY, USE CAUTION WHEN MOVING OR LEVELING THIS APPLIANCE.

WARNING

IMPROPER INSTALLATION MAY RESULT IN FIRE.

Carefully read and follow all installation instructions located in this manual.

VENTILATION

DANGER

Installation, air adjustment and/or service work must be in accordance with all local codes and must be performed by a certified service technician qualified to work on gas appliances.

WARNING

This appliance shall be installed in conformity with the current regulations and used only in a well ventilated location. Consult the instructions before installing and using this appliance.

An adequate ventilation system is required for commercial cooking equipment. Information may be obtained by writing to the National Fire Protection Association, Batterymarch Park, Quincy, MA 02269. When writing refer to NFPA No. 96.

1. A single ASF-75G or ASF-60G auto-lift gas fryer requires a minimum of 120 CFM make-up air for natural gas and 48 CFM for propane gas. Kitchen ventilation must be of sufficient capacity to prevent a negative-pressure condition. **DO NOT** obstruct or restrict ventilation nor the air flow required to support combustion.
2. **DO NOT** obstruct the flow of the exhaust flue at the top rear of the fryer. It is especially critical that gas supply piping and electrical support cord and/or receptacle be routed away from the path of the hot combustion fumes.
3. This fryer cannot be direct vented.
4. Install the fryer under a ventilation hood meeting all applicable code requirements. Combustion fumes must be vented in accordance with local, state, or national codes.

CAUTION

To prevent malfunction or cause negative back draft, DO NOT obstruct exhaust flues or attach any flue extension that will impede proper burner operation.

DANGER

FAILURE TO VENT THIS FRYER PROPERLY MAY BE HAZARDOUS TO THE HEALTH OF THE OPERATOR.

Equipment damage and operational problems may also be the consequence of improper venting. Any damages sustained by a failure to properly vent this fryer are not covered under warranty.

Ventilating hoods and exhaust systems shall be permitted to be used to vent appliances installed in commercial applications.

Where automatically operated appliances are vented through a ventilating hood or exhaust system equipped with a damper or with a power means of exhaust, provisions shall be made to allow the flow of gas to the main burners only when the damper is open to a position to properly vent the appliance and when the power means of exhaust is in operation. IN ACCORDANCE WITH NFPA 54 COMMONWEALTH OF MASSACHUSETTS ONLY.

INSTALLATION

GAS SPECIFICATIONS

The Alto-Shaam open gas fryer has been set to operate with either natural gas or propane as indicated on the fryer identification name plate.

⚠ DANGER

CONNECTING TO THE WRONG GAS SUPPLY COULD RESULT IN FIRE OR AN EXPLOSION CAUSING SEVERE INJURY AND PROPERTY DAMAGE.

WARNING

TO AVOID SERIOUS PERSONAL INJURY, installation of this appliance must conform to local, state, and national codes; the current edition of the American National Standard Z223.1, National Fuel Gas Code, and all local municipal building codes. In Canada, installation must be in accordance with Standard CAN/CSA B 149.1 and Installation Codes - Gas Burning Appliances, and local codes.

INSTALLATION REQUIREMENTS
GAS CONNECTION: 1/2″ NPT
CHECK PLUMBING CODES FOR PROPER SUPPLY LINE SIZING TO ATTAIN MINIMUM BURNER MANIFOLD PRESSURE SHOWN: NATURAL GAS: 5.0″ W.C. PROPANE GAS: 10.0″ W.C.
MAXIMUM INLET PRESSURE: 14″ W.C.
NOTE: If a flexible gas line is used, it must be AGA approved, commercial type and at least 3/4″ I.D.
HOOD INSTALLATION IS REQUIRED

Category	I_{2H} at 20 mbar for use in AT, DK, FI, IE, IT, PT, SE, CH.
Category	$I_{2E(20)}$ at 20/25 mbar for use in DE, LU.
Category	$I_{2E+(20/25)}$ at 20/25 mbar for use in BE, FR.
Category	$I_{2L(25)}$ at 25 mbar for use in NL.
Category	$I_{3+(28\text{-}30/37)}$ at 28-30/37 mbar for use in BE, FR, IE, IT, LU, PT, CH.
Category	$I_{3B/P(30)}$ at 30 mbar for use in DK, FI, NL, SE.
Category	$I_{3B/P(50)}$ at 50 mbar for use in AT, DE, CH.
Category	$I_{3P(37)}$ at 37 mbar for use in FI, DE, IE, CH.

The appliance and its individual shutoff valve must be disconnected from the gas supply piping system during any pressure testing of that system at test pressures in excess of 1/2 psi. The appliance must be isolated from the gas supply piping system by closing its individual manual shutoff valve during any pressure testing of the gas supply piping system at test pressures equal to or less than 1/2 psi.

NOTE: Customer/installer must provide manual gas shut-off valve in accordance with local code requirements.

GAS PRESSURE CHART

The fryer has been factory adjusted according to the gas type specified on the fryer identification name plate.

GAS FRYER TECHNICAL SPECIFICATIONS		
Natural Gas		
Min. Connected Pressure	5.0″ W.C.	1.2 kPa
Max. Connected Pressure	14.0″ W.C.	3.5 kPa
Gas Consumption Gross Thermal Output	120 CFM 120,000 Btu/hr	
Propane Gas		
Min. Connected Pressure	10.0″ W.C.	2.5 kPa
Max. Connected Pressure	14.0″ W.C.	3.5 kPa
Gas Consumption Gross Thermal Output	48 CFM 120,000 Btu/hr	

GAS SPECIFICATIONS	
☐ NATURAL GAS	☐ PROPANE GAS
120,000 BTU/hr. INPUT	120,000 BTU/hr. INPUT

Declared input (kW)	35.15
Gas Group	$I_{2H(20)}$, $I_{2E(20)}$, $I_{2E+(20/25)}$, $I_{2L(25)}$, $I_{3+(28\text{-}30/37)}$, $I_{3B/P(30)}$, $I_{3B/P(37)}$, $I_{3B/P(50)}$, $I_{3P(37)}$, $I_{3P(50)}$
Inlet pressure (mbar)	17.5 (NAT) and 27.5 (LP)
Declared setting pressure at the outlet from the gas valve (mbar)	12.5 (NAT) and 25 (LP)
Main burner type	Infrared type with blower and venturi valve
Number of injectors	1
Main injector type	N/A
Main injector size and markings	N/A
Main burner aeration opening size	Variable pre-set at factory
Ignition	Direct spark electronic ignition
Inlet connection	20.995 mm male thread

DANGER

Installation, air adjustment and/or service work must be in accordance with all local codes and must be performed by a certified service technician qualified to work on gas appliances.

Use an approved gas pipe sealant at all external threaded connections, gas piping used on gas connections must avoid sharp bends that may restrict the flow of gas to the appliance. If the connected pressure exceeds 14.0″ W.C. (3.5 kPa), a step-down regulator is required to be supplied by the owner/operator.

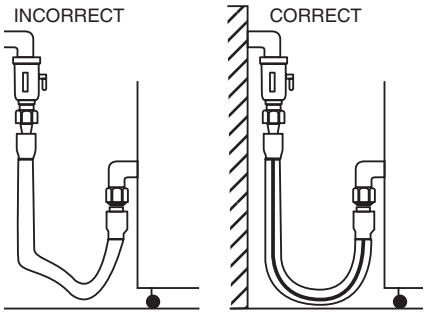

Close the individual manual shut-off valve to ***isolate the fryer*** from the gas supply piping system during any pressure testing at test pressures equal to or less than $^1/_2$ psig. (3.4 kPa). The fryer and individual shut-off valve ***must be disconnected*** from the gas supply piping system during any pressure testing at pressures in excess of 1/2 psig. (3,4 kPa).

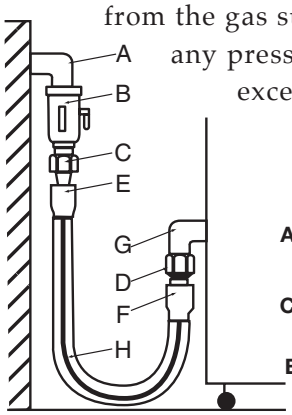

GAS INTAKE

A-G	**Installation elbow**
B	**Wall Valve**
C-D	**Three-piece union fitting (minimum 1 per installation)**
E-F	**End connector for the flexible tube**
H	**Marking line**

In the U.S.A., installation must conform to local codes or, in the absence of local codes, with the current edition of the ***National Fuel Gas Code***, NFPA-54 and ANSI Z83.11a CSA 1.8a 2004 (or latest edition). In Canada, installation must be in accordance with local codes, CAN/CGA-B149.1, ***Installation for Natural Gas Burning Appliances and Equipment*** (latest edition) or CAN/CGA-B149.2 ***Installation for Propane Burning Appliances and Equipment*** (latest edition).

The inlet supply line must be properly sized to accommodate all individual appliances simultaneously used on the same line but must never be smaller than 3/4″ I.D.

LEAK TESTING

Installation requires gas leak testing on all gas piping and fittings. Use an approved electronic leak device or a soap and water solution at all gas connections. If bubbling appears when using a soap and water solution, the connection must be refitted. Never use an open flame to leak test.

DANGER

NEVER USE AN OPEN FLAME TO LEAK TEST.

INSTALLATION

RESTRAINT REQUIREMENTS - MOBILE EQUIPMENT

The fryer must be supplied with a connector that complies with all state and local installation codes.

Any appliance that is not furnished with a power supply cord but that includes a set of casters must be tethered. Adequate means must be provided to limit the movement of this appliance without depending on or transmitting stress to the electrical conduit. The following requirements apply:

1. Casters must be a maximum height of 4-inches (102mm).
2. Such mobile appliances must be installed with the use of a flexible connector secured to the building structure.

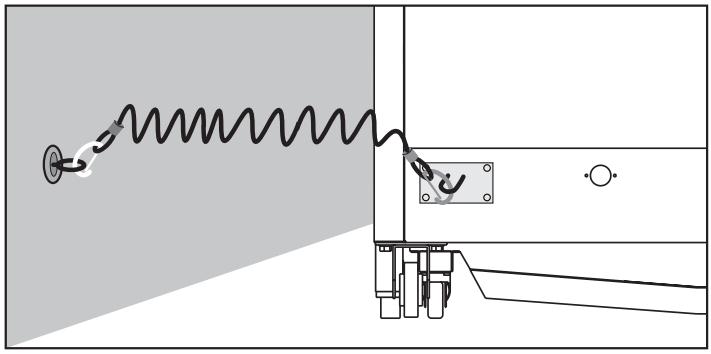

located on the lower back flange of the appliance chassis, approximately 7-inches (178mm) from the floor. A flexible connector is not supplied by nor is it available from the factory.

WARNING

RISK OF ELECTRIC SHOCK.

Appliance must be secured to building structure.

ELECTRICAL REQUIREMENTS

DANGER

To avoid electrical shock, this appliance MUST be adequately grounded in accordance with local electrical codes or, in the absence of local codes, with the current edition of the National Electrical Code ANSI/ NFPA No. 70. In Canada, all electrical connections are to be made in accordance with CSA C22.1, Canadian Electrical Code Part 1 or local codes.

An electrical wiring diagram is located in the front access door of the fryer. The fryer must be installed by a qualified electrician. This appliance must be branch circuit protected with proper ampacities, in accordance with the wiring diagram located in the fryer. The fryer must be properly grounded in accordance with the National Electrical Code and applicable local codes. A means to disconnect the unit must be incorporated into the fixed wiring in accordance with wiring codes.

Wire size for the main incoming power to the unit must match the minimum size listed in the specifications applicable to the specific fryer. For supply connections, locate the wire size posted on the label located on the electrical control box cover, behind the service panel or elsewhere listed in this manual.

Before operating the fryer, check all cable connections in the electrical connection area for tightness since connections can loosen during transport.

DANGER

ENSURE POWER SOURCE MATCHES VOLTAGE STAMPED ON APPLIANCE NAMEPLATE.

230V:

To prevent an electrical shock hazard between the appliance and other appliances or metal parts in close vicinity, an equalization-bonding stud is provided. An equalization bonding lead must be connected to this stud and the other appliances / metal parts to provide sufficient protection against potential difference. The terminal is marked with the following symbol.

Hard wired models:

Hard wired models must be equipped with a country certified external allpole disconnection switch with sufficient contact separation.

If a power cord is used for the connection of the product an oil resistant cord like H05RN or H07RN or equivalent must be used.

ELECTRICAL • ASF-60G WITH DELUXE CONTROL

VOLTAGE	PHASE	CYCLE/HZ	AMPS	kW	
120 (AGCY)	1	60	1.2	0.15	NEMA 5-15P 15A-125V PLUG
230	1	50/60	1.0	0.23	CEE 7/7 220-230V PLUG

ELECTRICAL • ASF-75G WITH DELUXE CONTROL

VOLTAGE	PHASE	CYCLE/HZ	AMPS	kW	
120 (AGCY)	1	60	7.2	0.86	NEMA 5-15P 15A-125V Plug
230 (AGCY)	1	50/60	4.0	0.92	CEE 7/7 220-230V PLUG

OPERATION

OIL/SHORTENING REQUIREMENTS

OIL/SHORTENING REQUIREMENTS

The ASF-75G requires 73-pounds (33 kg) of oil or shortening in the frypot and the ASF-60G requires 62-pounds (28 kg) of oil or shortening. Use only quality, high-grade oil/shortening in the fryer. The high moisture content of many lower grade shortening will result in excessive foaming and boil over. The cold oil/shortening level requirement for the fryer is indicated below.

CAUTION

Cold oil or shortening expands as the temperature increases. To avoid injury and equipment damage, allow for expansion by filling to the cold oil fill line.

NOTE: Always maintain the proper level of shortening by adding fresh oil/shortening to the frypot whenever needed.

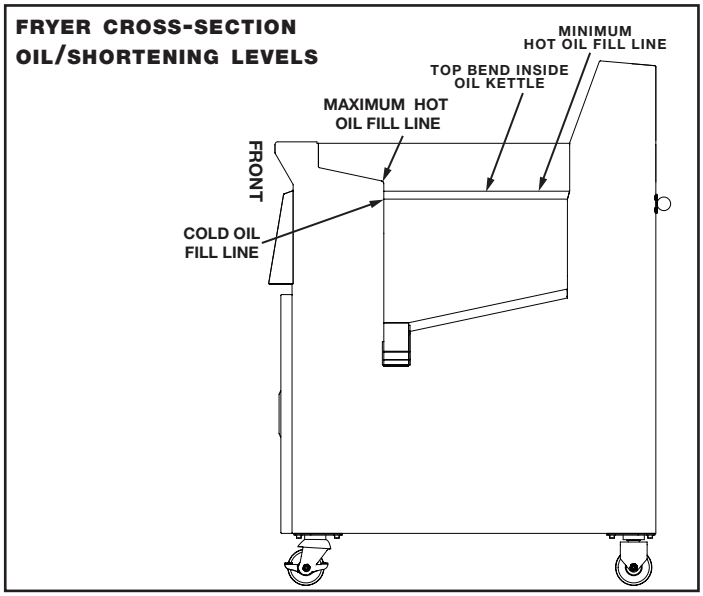

WARNING

FAILURE TO PLACE SOLID SHORTENING DIRECTLY ON THE BOTTOM OF THE FRYPOT CAN CAUSE SERIOUS EQUIPMENT DAMAGE.

Check the quality of the oil/shortening in the frypot on a daily basis for signs of deterioration. Use an approved test kit. Signs of shortening deterioration include excessive boiling, smoking, foaming, bad taste, and rancid odor.

⚠ DANGER

The flash point of shortening occurs at a lower temperature the longer the shortening is used. Discard any shortening showing signs of deterioration to avoid serious burns, fire, and property damage.

Discard any shortening before it degrades to the point of affecting product quality. Always filter the oil on a regular basis and keep the frypot clean.

CAUTION

ENSURE THERE IS NO WATER IN THE FRYPOT BEFORE FILLING WITH OIL/SHORTENING. WHEN COOKING COMPOUNDS ARE HEATED TO COOKING TEMPERATURE, WATER IN THE FRYPOT WILL CAUSE OIL TO SPLATTER AND MAY BE A BURN HAZARD.

Remove ice crystals and ensure that food is dry before frying. Excessive water and ice can cause oil to splatter or overflow. Do not over fill the basket. Food needs to be surrounded by oil for best frying results.

Maximum shortening life is achieved by lowering the temperature of the fryer to 250°F (121°C) whenever the fryer is not being used. This is an automatic program function through the control program designation of **"IdleMode."** The factory default is set at a period of 30 minutes of non use before triggering a temperature decrease, however; this time period can be adjusted between "**0**" and "**60**" minutes. (SEE PROGRAMMING THE CONTROL)

CAUTION

FIRE OR EQUIPMENT DAMAGE CAN RESULT FROM IMPROPER SHORTENING LEVELS. THE LEVEL OF SHORTENING MUST ALWAYS BE ABOVE THE HEAT EXCHANGERS WHEN THE FRYER IS OPERATING. THE REQUIRED SHORTENING LEVEL MUST ALWAYS BE ABOVE THE MINIMUM HOT OIL FILL LINE.

CAUTION

METAL PARTS OF THIS EQUIPMENT BECOME EXTREMELY HOT WHEN IN OPERATION. TO AVOID BURNS, ALWAYS USE HAND PROTECTION WHEN OPERATING THIS APPLIANCE.

CONTROLS BEHIND LOWER ACCESS PANEL

ASF-60G, 120V

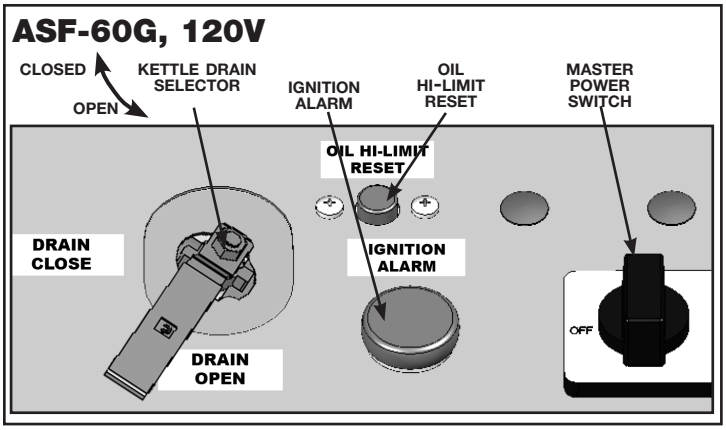

ASF-60G, 230V

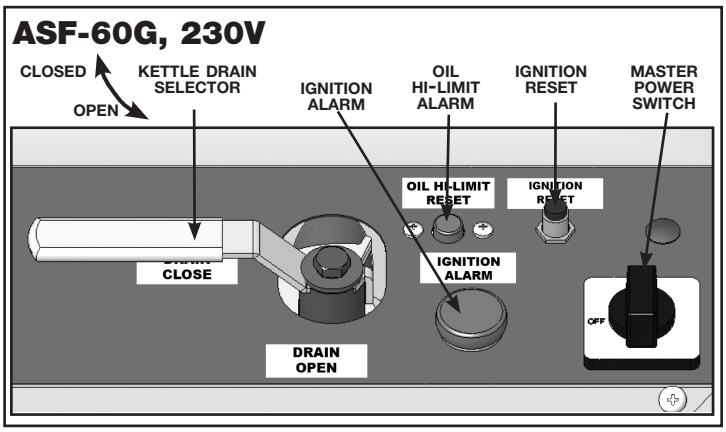

ASF-75G, 120V WITH FILTRATION

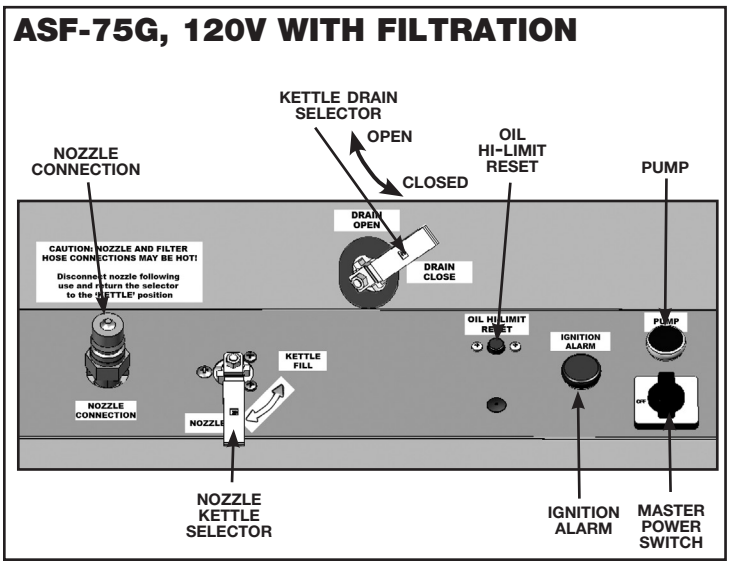

OPERATION

BOIL-OUT PROCEDURE

NOTE: Perform an initial Boil-Out to clean and sanitize the fryer before operating.

Carbonized deposits along with an accumulation of oil will eventually build-up on the interior of the frypot as well as fryer accessories. It is important to periodically remove these deposits, not only to maintain fryer efficiency but also to provide the highest product quality.

NOTE: Always wear eye protection or a face shield and protective rubber gloves when cleaning the frypot as boil-out chemical is an alkaline solution and can cause severe burns.

NOTE: Because each fryer is controlled separately, the following procedure must be followed for every unit in multiple-fryer units.

CAUTION

BOIL-OUT SOLUTION AND SURROUNDING METAL SURFACES BECOME EXTREMELY HOT. TO AVOID BURNS, ALWAYS USE HAND PROTECTION WHEN PERFORMING THE BOIL-OUT FUNCTION AND FOLLOW THE MANUFACTURER'S SAFETY INSTRUCTIONS FOR THE BOIL-OUT PRODUCT BEING USED.

CAUTION

BEFORE ENTERING THIS PROGRAM, MAKE CERTAIN THE FRYPOT IS EMPTY OF ALL OIL OR SHORTENING.

CAUTION

TO AVOID DAMAGING THE PUMP AND CONTAMINATING CLEAN OIL WITH BOIL-OUT CHEMICAL ON UNITS EQUIPPED WITH A FILTRATION SYSTEM, NEVER ALLOW BOIL-OUT SOLUTION OR RINSE WATER TO CIRCULATE THROUGH THE FRYER PUMP SYSTEM.

CAUTION

DO NOT LEAVE THE FRYER UNATTENDED DURING THE BOIL-OUT PROCESS. THE FRYER MUST BE CONTINUOUSLY MONITORED FOR BOIL-OVER CONDITIONS, PARTICULARLY IN HIGH-ALTITUDE LOCATIONS. IF BOIL-OVER IS IMMINENT, IMMEDIATELY TURN THE MASTER POWER SWITCH OFF AND ALLOW THE SOLUTION TO COOL. WHEN THE SOLUTION HAS COOLED, RE-ENTER THE BOIL-OUT MODE.

NOTE: Manual Boil-Out can only be performed when the actual temperature of the frypot is less than 230°F (110°C).

1. Place the mobile oil drawer or heat safe container under the drain. Rotate drain valve to **"OPEN"** to drain oil. If equipped with the optional oil hand wand, use the wand to pump oil into the frypot to further rinse food particles out of the frypot. Carefully disconnect the wand from fryer and drain any residual oil from the wand into the frypot and then drain the remaining oil from frypot.
2. While wearing heat resistant gloves, wipe excess oil out of inside of frypot with paper towel or clean rag.
3. If oil has been drained into a mobile oil drawer, empty the oil from the drawer. Wash the oil drawer, rinse with clean water, and dry drawer thoroughly.
4. If the fryer is equipped with a filtration system, clean or replace the filter in the filter cartridge and remove cartridge from unit. (See filtration instructions on page 16-17.)
5. Open the front access door. If equipped with a filtration system, rotate the Kettle/Nozzle selector to the **"KETTLE"** position, then rotate the drain valve clockwise until rotation stops and the drain valve is **"CLOSED."**

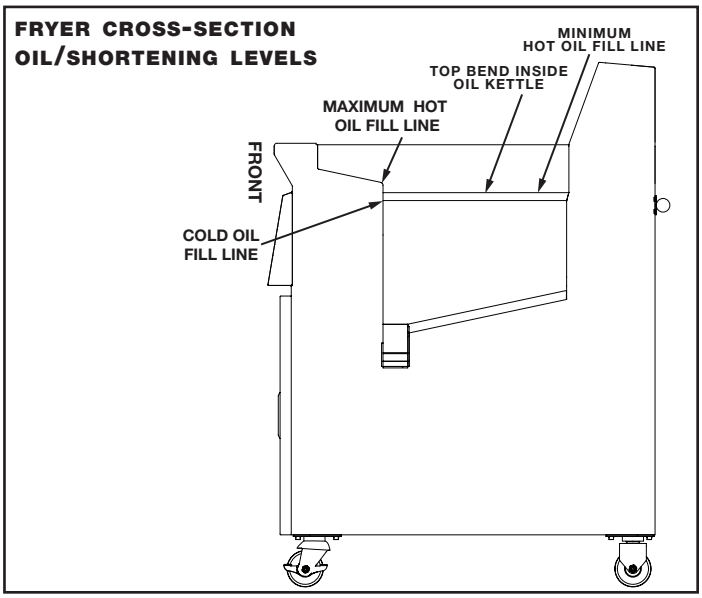

6. Fill the fryer to the maximum oil fill line with water.
7. Add boil out solution. Carefully follow the manufacturer's directions for mixing the boil-out solution.

CAUTION

KEEP A CONTAINER OF COLD WATER ON HAND DURING BOIL-OUT IN CASE OF BOIL-OVER. IF BOIL-OVER IS IMMINENT, IMMEDIATELY TURN OFF MASTER POWER SWITCH AND POUR COLD WATER INTO FRYPOT TO QUICKLY REDUCE SOLUTION TEMPERATURE.

8. Turn the Master Power Switch (located behind the front access door) to the **"ON"** position if not already on.

9. Within a few seconds, both LED's on the operational control panel will display **"OFF"** when the Master Power Switch is initially engaged.

NOTE: Initial access to the programming mode must start with the control in the "OFF" position.

10. Press and hold the Program Key for 10 seconds.

"Boil" will appear as the first item on the display whenever the **"PROGRAM"** key is initially pressed.

11. Press the Right ▶ arrow key to enter the **"Boil"** program.

12. The display will indicate **"READY ?"**. Press the Right ▶ arrow key to start the boil-out function. The boil-out solution will begin to heat to a temperature of 195°F (91°C). When the temperature has been reached, the appliance will begin a 10 minute countdown.

NOTE: The countdown period will not show in the display.

13. At the end of the boil-out period, an alarm will sound and the control will revert to the **"OFF"** state.

14. Wearing protective gloves to avoid burns, scrub the inside of the fypot with a long-handled scrub brush.

15. Place another mobile oil drawer or heat safe container under the drain. Rotate the drain to the **"OPEN"** position. **The handle should be rotated counterclockwise until it stops.** Allow the boil-out solution to completely drain into mobile oil drawer or a heat safe container. Discard boil-out solution. Return the drawer to the fully-inserted position beneath the fryer.

16. Making sure the drain is **"OPEN"**, rinse all boil-out solution from fry pot, drain, burner holes, etc. Follow the boil-out solution manufacturer's additional boil-out instructions to rinse the frypot in order to neutralize boil-out cleaner residue. Discard rinse solution.

17. There may be residual boil-out solution in the oil fill-hole and tube. This must be flushed out and discarded separately before filling the tank with new oil to avoid contamination of new oil.

For filtration-equipped fryers: Place a small amount of clean, liquid oil in the clean fat drawer. Pump a small amount of oil through the the system. While wearing heat resistant gloves, catch the oil that is pumped through the fill hole inside frypot with paper towel. Drain the oil. Rinse fry pot with a small amount of water.

For units without a pump or filtration system: Pour a small amount of oil into the the fryer and drain it into a separate container. Rinse frypot and frypot drain with water.

CAUTION

ENSURE THERE IS NO WATER IN THE FRYPOT BEFORE FILLING WITH OIL/SHORTENING. WHEN COOKING COMPOUNDS ARE HEATED TO COOKING TEMPERATURE, WATER IN THE FRYPOT WILL CAUSE OIL TO SPLATTER AND MAY BE A BURN HAZARD.

18. Following the boil-out and rinse procedure, wipe dry all accessible interior metal surfaces and interior accessories with a clean, dry cloth to remove any remaining moisture. Clean and dry the fry baskets separately.

NOTE: Make sure the inside of the frypot, the drain opening and all parts that come into contact with new oil/shortening are as dry as possible.

19. Wipe the exterior of the fryer cabinet with a degreaser/sanitizer suitable for use on food contact surfaces. Always follow the manufacturer's instructions and/or mixing directions for proper solution strengths.

Wipe exterior stainless steel surfaces with the grain of the metal and **avoid the use of abrasive pads, steel wool, or metal implements.**

20. Rotate drain to **"CLOSED"** position.

21. Replace the oil filter if equipped with filtration system. (See instructions on pages 15-17.)

22. Fill tank with new oil or shortening.

OPERATION

START UP & GENERAL OPERATION

DANGER

BEFORE STARTING THE APPLIANCE, MAKE CERTAIN YOU DO NOT DETECT THE ODOR OF GAS.

IF THE ODOR OF GAS IS DETECTED:

- **DO NOT attempt to light any appliance.**
- **DO NOT touch any electrical switches.**
- **Extinguish any open flame.**
- **Use a telephone OUTSIDE THE PROPERTY & IMMEDIATELY contact your gas supplier.**
- **If unable to contact your gas supplier, contact the fire department.**

NOTE: Perform an initial Boil-Out to clean and sanitize the fryer before operating. (See page 13.)

1. Service is to be performed by an authorized Alto-Shaam service agent.
2. Ensure all local electrical codes, fire codes, and all other requirements such as hood installation have been met in the process of installation.

NOTE: Because each fryer station is controlled separately, the following procedures must be followed for every component fryer in multiple-station units.

3. Open front access door and ensure drain valve is in the **"CLOSED"** position. **The handle should be rotated clockwise until it stops.**
4. Fill frypot with frying compound as indicated. (SEE ILLUSTRATION ON THE OIL/SHORTENING REQUIREMENTS PAGE)
5. The Master Power Switch is located behind the front access door. Turn Master Power Switch **"ON."** The LED display on the deluxe control panel will indicate **"N7"** and the software version.
6. Both **"LED"** displays on the control panel will indicate **"OFF"** when the Master Power Switch is initially turned to the **"ON"** position.
7. Press and hold the Power **"ON"** Key on the main control panel for 3 seconds. Both **"LED"** displays on the control panel will indicate actual oil temperature or ambient room temperature. The bottom of alpha/numeric display will indicate **"MELT-CYCLE."** It is recommended to allow the fryer to complete the "Melt Cycle" when using solid shortening; however, if liquid shortening is used the "Melt Cycle" may be bypassed by pressing Temperature Key for 3 seconds.

WARNING

BYPASSING THE "MELT-CYCLE" WHEN USING SOLID SHORTENING CAN RESULT IN MAJOR EQUIPMENT DAMAGE AND WILL VOID ALL WARRANTIES.

8. After fryer has reached the factory-set oil temperature of 350°F (177°C) or the temperature set by the operator, product can be fried.
9. More detailed operating guidelines along with information on presets and other options are located within this manual.
10. For fryer **"Shutdown"** press the Power Key on the main control panel to the **"OFF"** position. Then turn the Master Power Switch located behind the front access door to the **"OFF"** position.

NOTE: FOR YOUR PROTECTION the fryer is furnished with a hi-limit safety shutoff that will disengage the control if the oil temperature in the frypot would ever exceed 432°F (222°C). In this event, the oil temperature must be allowed to decrease to 375°F (191°C) before restarting the appliance. After allowing the oil temperature to decrease, open the front access door and press the RESET BUTTON for a period of 3-seconds to restart the control.

ASF-75G OIL/SHORTENING FILTRATION

Careful observation of the finished food product will help determine optimal filtering frequency. Filtering the cooking oil at regular intervals will help ensure food quality.

FOR BEST RESULTS: Do not allow the temperature of the oil to decrease below the **"Idle Mode"** temperature of 250°F (121°C) when filtering. If filtering at the end of the day, pump oil back into the kettle while still hot. Do not allow oil to cool before returning to kettle.

CAUTION

OPERATORS MUST BE MADE AWARE OF THE HAZARDS INVOLVED IN THE OPERATION OF A HOT OIL FILTERING SYSTEM. ON-SITE SUPERVISION DURING THE FILTRATION PROCESS AND THE CLEANING PROCESS IS STRONGLY RECOMMENDED.

CAUTION

METAL PARTS OF THIS EQUIPMENT BECOME EXTREMELY HOT WHEN IN OPERATION. TO AVOID BURNS, ALWAYS USE HAND PROTECTION WHEN OPERATING THIS APPLIANCE.

WARNING

TO AVOID PERSONAL INJURY, USE CAUTION WHEN SURFACES BECOME SLIPPERY DUE TO SPILLED OR DRIPPING OIL.

1. Open the front access door. With the Nozzle selector in the **"NOZZLE OFF"** position, rotate the drain valve counterclock-wise until rotation stops and the drain valve is in the **"OPEN"** position. Power to the main control panel will automatically switch **"OFF."**
2. Allow contents of the fryer to completely drain.
3. Press the **PUMP "ON"** to allow the oil to circulate through the drain system to flush crumbs. Using the brushes provided, brush the sides, bottom and under the heat exchangers of the fryer while the oil is circulating through the system.
4. Press the **PUMP "OFF"** and allow contents of the fryer to completely drain.
5. Rotate the drain valve clockwise to the **"CLOSED"** position.
6. Press the **PUMP "ON"** and allow the fryer to refill to the recommended level adding additional oil/shortening as required to maintain proper fill level.
7. Press the **PUMP "OFF"** button.
8. After the frypot has completely refilled, pull out the mobile oil trolley and discard the filter into a proper receptacle. Clean the filter assembly and oil trolley, if needed.
9. Replace the oil filter and return the trolley to the proper position beneath the fryer.
10. Press and hold the **"ON/OFF"** key on the main control panel for 1-1/2 to 2 seconds to energize the fryer. Continue normal fryer operation after the preheat function has been completed.

OPERATION

ASF-75G OIL/SHORTENING FILTRATION

FILTER REPLACEMENT

1. With the **DRAIN** in the **"CLOSED"** position, pull the trolley from the fryer and disconnect the hose from the fryer. Use optional trolley handle if available, or take care when pulling trolley from fryer as it has sharp edges. (Contact factory for optional trolley handle information.)

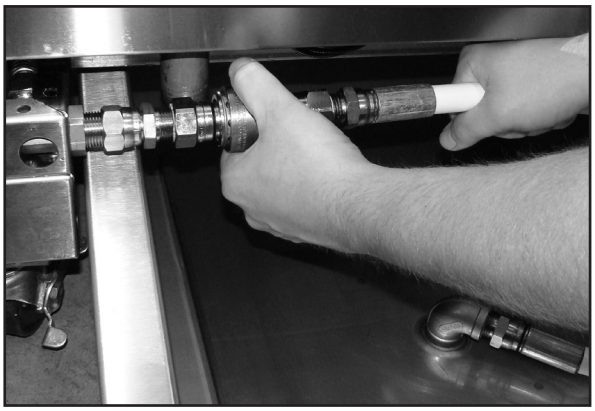

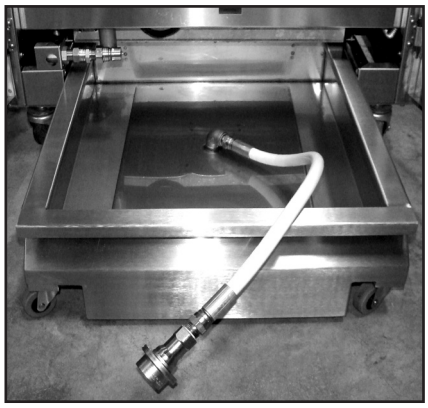

2. Pushing down on filter frame ❹ clip, pull side of filter cartridge ❶ closest to clip upwards. Slide opposite edge of filter cartridge out from beneath the filter frame lip.
3. Remove used filter ❷ and filter ring ❸. Discard filter ❷. Retain filter ring ❸.
4. Place new filter ❷ and filter ring ❸ next to screen on underside of filter cartridge ❶. Reverse step 2 above.
5. Reconnect hose to fryer and return trolley to the full position under the fryer.

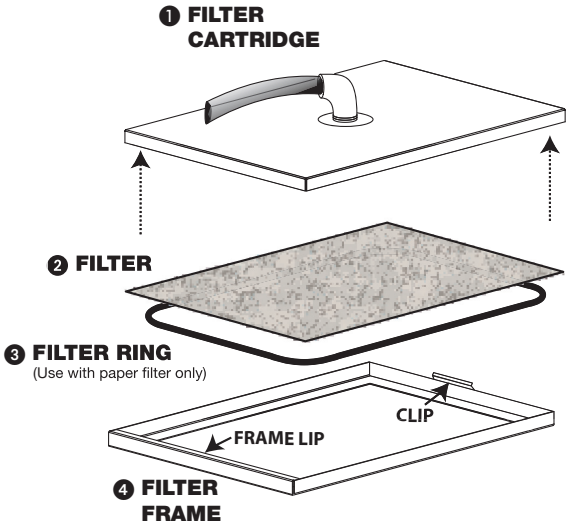

STANDARD AND OPTIONAL FILTERS

PART NO.	DESCRIPTION
FI-27791	PAPER (STANDARD WITH FRYER) 7-count package
FI-27794	PAPER (STANDARD WITH FRYER) 100-count package
FI-27648	CHARCOAL/CARBON FILTER 30-count pkg.
FI-27014	REUSABLE MESH FILTER, single

FILTER CLEANING & MAINTENANCE

NOTE: Make certain to use hand protection when working with hot surfaces.

REUSABLE MESH FILTER OPTION:

Clean the reusable mesh filter **(FI-27014)** by spraying thoroughly with hot water. **DO NOT** clean in the dishwasher. **DO NOT** use detergents to clean. Detergents and detergent residues will significantly reduce the life of oil and shortening products.

CAUTION

A WORN FILTER WILL AFFECT PRODUCT FRYING RESULTS.

Make certain the filter is performing efficiently by inspecting the filter each time it is cleaned. Examine for cuts and holes. For the best results, replace the filter whenever necessary.

CAUTION

TO PREVENT FILTER DAMAGE, DO NOT USE SHARP IMPLEMENTS TO REMOVE SCRAPS FROM THE FILTER.

Make certain the filter is securely fastened to the support basket before returning the assembly to the trolley.

To discard deteriorated oil/shortening, the trolley can be pulled from the fryer and can be rolled to a convenient location for use with a pumping device.

ALWAYS MAKE CERTAIN THE TROLLEY IS PROPERLY POSITIONED BENEATH THE FRYER BEFORE OPERATION.

WARNING

TO AVOID PERSONAL INJURY, USE CAUTION WHEN SURFACES BECOME SLIPPERY DUE TO SPILLED OR DRIPPING OIL.

CAUTION

METAL PARTS OF THIS EQUIPMENT BECOME EXTREMELY HOT WHEN IN OPERATION. TO AVOID BURNS, ALWAYS USE HAND PROTECTION WHEN OPERATING THIS APPLIANCE.

OPERATION

ASF-75G OIL/SHORTENING FILTRATION

CLEANING & MAINTENANCE

OIL DISCARD HOSE OPTION:

The oil discard hose option (HO-27686) is available as an option to assist both the boil-out and filtration operation.

With the discard hose attached to the nozzle connection, place the Kettle/Nozzle selector in the **"NOZZLE"** position.

ASF-75G, 120V WITH FILTRATION

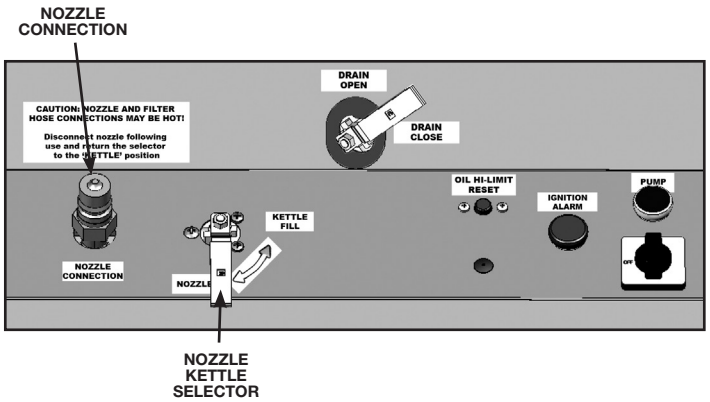

The drain can be placed in the **"OPEN"** or **"CLOSED"** position as required.

Disconnect hose following use and return the selector to the **"KETTLE FILL"** position.

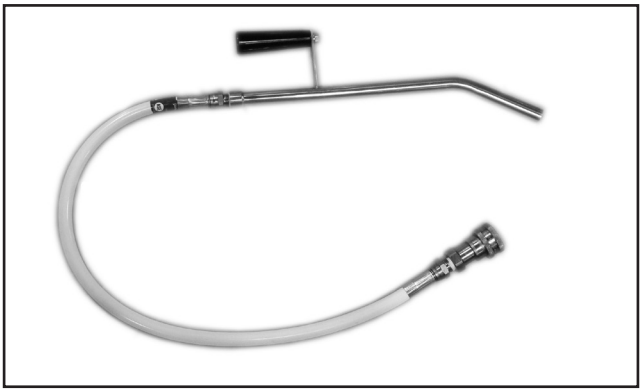

Nozzle will contain a small amount of oil after use. Dispose of properly.

DANGER

TO AVOID SERIOUS PERSONAL INJURY DO NOT STAND ON THE FRYER OR FRYER COVER. THE FRYER COVER IS DESIGNED TO HOLD A MAXIMUM OF 10-POUNDS (4,5 KG) OF WEIGHT.

ALL SUGGESTED FRYING TIMES ARE BASED ON A FULL LOAD OF PRODUCT

Remove ice crystals and ensure that food is dry before frying. Excessive water and ice can cause oil to splatter or overflow. Do not over fill the basket. Food needs to be surrounded by oil for best frying results.

SUGGESTED FRYING TIMES

	ITEM	MINUTES	TEMPERATURE	DISPLAY
PROGRAM KEYS	1. **Fries (FROZEN)**	**3:30**	**350°F (177°C)**	Fries
	2. **Chicken Nuggets (FROZEN)**	**3:30**	**350°F (177°C)**	Nuggets
	3. **Fish, Breaded (FROZEN)**	**4:30**	**350°F (177°C)**	Fish
	4. **Chicken Pieces, Breaded (FRESH)**	**17:00**	**340°F (171°C)**	Chicken
	5. PRODUCT A			ProductC
	6. PRODUCT B			ProductD

ITEM	MINUTES	TEMPERATURE
Appetizer	3:30	350°F (177°C)
Breaded Cauliflower	3:30	340°F (171°C)
Breaded Fish	Per pkg. instructions	340°F (171°C)
Breaded Mac & Cheese	3:30	340°F (171°C)
Breaded Mushrooms	3:30	340°F (171°C)
Broccoli Cheese Nuggets	2:30	350°F (177°C)
Cheese Cake, Fried	8:30	350°F (177°C)
Cheese Nuggets	1:30	350°F (177°C)
Chicken Breasts (FRESH)	12:00-17:00	315°F (171°C)
Chicken Breasts (FROZEN)	20:00	330°F (166°C)
Chicken Fried Steak	4:00	350°F (177°C)
Chicken Gizzards (FRESH)	3:30	350°F (177°C)
Chicken, Legs & Wings (FRESH)	12:00-17:00	315°F (171°C)
Chicken Legs (FROZEN)	18:00	330°F (166°C)
Chicken, Patty	6:00	350°F (177°C)
Chicken Pieces - MRB (FROZEN)	17:00	340°F (171°C)
Chicken Strips	6:00	340°F (171°C)
Chicken Tenderloins (FRESH)	3:00	350°F (177°C)
Chicken Tenders, Breaded (FROZEN)	3:30	350°F (177°C)
Chicken Wings (FRESH)	3:30	350°F (177°C)
Chicken Wings (FROZEN)	15:00	330°F (177°C)
Clam Strips	2:00	340°F (171°C)
Corn Dogs	10:00	350°F (177°C)
Cream Cheese Jalapeño Poppers	3:30	340°F (171°C)

THE TIMES AND TEMPERATURES ARE SUGGESTED GUIDELINES ONLY. ALL COOKING SHOULD BE BASED ON INTERNAL PRODUCT TEMPERATURES. DUE TO VARIATIONS IN PRODUCT QUALITY, WEIGHT, AND DESIRED DEGREE OF DONENESS, THE COOKING TIMES AND TEMPERATURES MAY NEED TO BE ADJUSTED ACCORDINGLY. ALWAYS FOLLOW LOCAL HEALTH (HYGIENE) REGULATIONS FOR ALL INTERNAL TEMPERATURE REQUIREMENTS.

OPERATION

ALL SUGGESTED FRYING TIMES ARE BASED ON A FULL LOAD OF PRODUCT

Remove ice crystals and ensure that food is dry before frying. Excessive water and ice can cause oil to splatter or overflow. Do not over fill the basket. Food needs to be surrounded by oil for best frying results.

SUGGESTED FRYING TIMES

ITEM	MINUTES	TEMPERATURE
Eggplant	4:00	340°F (171°C)
Egg Rolls (FROZEN)	5:00	340°F (171°C)
Fries, Crinkle-Cut	5:00	340°F (171°C)
Fries, Seasoned	4:00	340°F (171°C)
Fries, Sour Cream & Chive	4:00	340°F (171°C)
Fries (FRESH)	5:00	340°F (171°C)
Fries, Thin Cut	3:30	340°F (171°C)
Hash Brown Circles	4:00	340°F (171°C)
Jalapeno Peppers, Stuffed	4:00	350°F (177°C)
Mozzarella Sticks, Battered or Breaded	Per pkg. instructions	340°F (171°C)
Mushrooms, Breaded	3:30	350°F (177°C)
Onion Rings	3:00	340°F (171°C)
Pork Chops (FRESH)	10:00	340°F (171°C)
Pork (FRESH)	12:00	340°F (171°C)
Potato Chips (fresh)	2:45	325°F (163°C)
Potato Wedges	3:00	350°F (177°C)
Quesadilla Rolls	3:30	350°F (177°C)
Shrimp	3:30	340°F (171°C)
Vegetables	3:00	350°F (177°C)
Zucchini, Breaded (FRESH)	3:30	350°F (177°C)

THE TIMES AND TEMPERATURES ARE SUGGESTED GUIDELINES ONLY. ALL COOKING SHOULD BE BASED ON INTERNAL PRODUCT TEMPERATURES. DUE TO VARIATIONS IN PRODUCT QUALITY, WEIGHT, AND DESIRED DEGREE OF DONENESS, THE COOKING TIMES AND TEMPERATURES MAY NEED TO BE ADJUSTED ACCORDINGLY. ALWAYS FOLLOW LOCAL HEALTH (HYGIENE) REGULATIONS FOR ALL INTERNAL TEMPERATURE REQUIREMENTS.

⚠ DANGER

DISCONNECT UNIT FROM POWER SOURCE BEFORE CLEANING OR SERVICING.

THOROUGHLY CLEAN DAILY

The cleanliness and appearance of this unit will contribute considerably to operating efficiency and savory, appetizing food. Good equipment kept clean works better and lasts longer.

1. Disconnect unit from power source, and let cool.
2. Remove all detachable items. Clean these items separately with a good grease solvent or commercial detergent. Rinse well and dry.
3. Clean control panel, door vents, door handles, and door gaskets thoroughly since these areas harbor food debris. Rinse by wiping with sponge and clean warm water. Wipe dry with a clean cloth.
4. To help maintain the protective film coating on polished stainless steel, clean the exterior of the unit with a cleaner recommended for stainless steel surfaces. Spray the cleaning agent on a clean cloth and wipe with the grain of the stainless steel.

NOTE: Avoid the use of abrasive cleaning, compounds, chloride based cleaners, or cleaners containing quaternary salts. Never use hydrochloric acid (muriatic acid) on stainless steel.

Always follow appropriate state or local health (hygiene) regulations regarding all applicable cleaning and sanitation requirements for foodservice equipment.

DANGER

AT NO TIME SHOULD THE INTERIOR OR EXTERIOR BE STEAM CLEANED, HOSED DOWN, OR FLOODED WITH WATER OR LIQUID SOLUTION OF ANY KIND. DO NOT USE WATER JET TO CLEAN.

SEVERE DAMAGE OR ELECTRICAL HAZARD COULD RESULT.

WARRANTY BECOMES VOID IF APPLIANCE IS FLOODED

⚠ CAUTION

NO SCRAPERS

NO WIRE BRUSHES

NO STEEL PADS

TO PROTECT STAINLESS STEEL SURFACES, COMPLETELY AVOID THE USE OF ABRASIVE CLEANING COMPOUNDS, CHLORIDE BASED CLEANERS, OR CLEANERS CONTAINING QUATERNARY SALTS. NEVER USE HYDROCHLORIC ACID (MURIATIC ACID) ON STAINLESS STEEL. NEVER USE WIRE BRUSHES, METAL SCOURING PADS OR SCRAPERS.

PANEL IDENTIFICATION

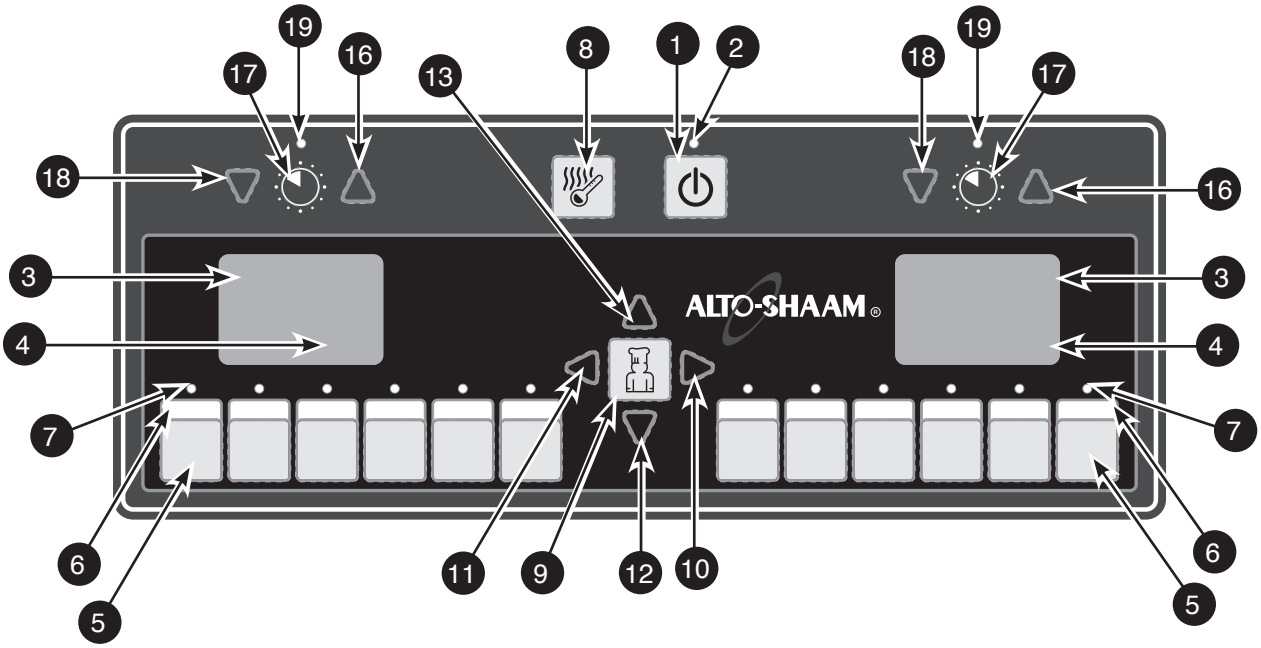

DUAL CONTROL PANEL IDENTIFICATION	
1. POWER ***ON*** KEY	11. LEFT ARROW KEY
2. POWER ***ON*** INDICATOR LIGHT	12. DOWN ARROW KEY
3. L.E.D. 4-DIGIT DISPLAY	13. UP ARROW KEY
4. ALPHA/NUMERIC DISPLAY	14. L.E.D. 4-DIGIT DISPLAY
5. PROGRAMMED PRODUCT KEYS (12)	15. ALPHA/NUMERIC DISPLAY
6. PROGRAMMED PRODUCT WINDOWS (2)	16. MANUAL OPERATION UP ARROW KEY
7. PROGRAMMED PRODUCT INDICATOR LIGHTS	17. MANUAL OPERATION TIME KEY
8. TEMPERATURE KEY	18. MANUAL OPERATION DOWN KEY
9. PROGRAMMING KEY	19. INDICATOR LIGHT
10. RIGHT ARROW KEY	

CAUTION

METAL PARTS OF THIS EQUIPMENT BECOME EXTREMELY HOT WHEN IN OPERATION. TO AVOID BURNS, ALWAYS USE HAND PROTECTION WHEN OPERATING THIS APPLIANCE.

PROGRAMMED PRODUCT KEY OPERATION

1. TURN THE POWER SWITCH LOCATED BEHIND THE LOWER FRONT ACCESS DOOR TO THE "ON" POSITION.

Press the **HI-LIMIT RESET** button.

The **HI-LIMIT ALARM** light will go out.

Both LED displays on the control panel will indicate **OFF**.

2.

Press and hold the **ON/OFF** key for 1-1/2 to 2 seconds to energize the fryer.
The indicator light within the display will illuminate to signify that the control is cycling the heaters to reach the set-point.

The following will appear in the alpha/numeric display:

"MELTCYC"

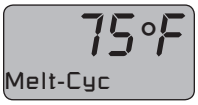

The fryer will start the melt-cycle mode. This is the required mode necessary for melting solid shortening within the frypot. The fryer will generate **ON/OFF** heating cycles and will remain in this mode until 180°F (82°C) is reached or the mode is manually bypassed.

FOR USE WITH LIQUID SHORTENING, PRESS THE TEMPERATURE KEY FOR 4 SECONDS TO BYPASS THE MELT CYCLE.

"PREHEAT"

Preheat will appear in the display and the fryer will generate a continuous heating cycle until it reaches the operator pre-programmed set-point or a default temperature of 350°F (177°C).

"READY"

When the frypot temperature is reached, **"READY,"** will appear in the Alpha/Numeric Display.

3. LOAD PRODUCT

Load product in basket(s) and set basket(s) in the fryer lift brackets. The basket(s) will automatically lower into the oil after the product key is pressed.

4.

Press and hold the desired **PROGRAMMED PRODUCT KEY** for 1 second.
The indicator light for the selected product key will illuminate.

The basket lift (ON LIFT EQUIPPED FRYERS ONLY) will lower the product into the cooking oil/shortening. The display will indicate the product name and the programmed cook time. The control will begin a countdown of the time.

CONTINUED

PROGRAMMED PRODUCT KEY OPERATION

5. If shake-time has been programmed into the selected product:

"SHAKE"

An alarm will sound during the cooking cycle at the specified shake-time programmed. **"SHAKE"** will appear in the display. The basket will automatically lift 50-percent and the display will count down from the shake time programmed.

After shaking the product, both the alarm and display can be cleared by pressing the selected product key. The basket will automatically lower into the cooking position and the cooking time will resume.

NOTE: This function will not occur if shake time has not been programmed into the selected product.

6. At the end of the cooking cycle…

"Done"

The basket(s) will lift (ON LIFT EQUIPPED FRYERS ONLY).
An alarm will sound.
The indicator light within the display will begin to flash.

If the control is set to "Continuous Alarm Mode," press the illuminated product key to silence alarm. If not set to "Continuous Alarm Mode," the alarm will stop in 5 seconds without user intervention and the display will revert to the 350°F (177°C) **"READY"** state if a hold value has not been programmed.

7. **"Hold Done"**

If a hold value has been entered into the cooking program, the control alarm will sound and the basket will automatically lift. The hold time will be displayed and countdown will begin. When the hold timer reaches 0, an alarm will sound and the product indicator light within the display will flash. Cancel the alarm by pressing the product key.

NOTE: If no hold value has been programmed, the control will skip to item 8.

8. **"READY"**

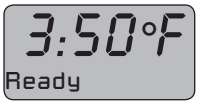

The control will revert to the ready state.
"READY," will appear in the Alpha/Numeric Display.
The 4-digit display will indicate the operator set temperature or the default set-point of 350°F (177°C).

MANUAL OPERATION

1. Press and hold the **ON/OFF** key for 1 second to energize the fryer.
The following will appear in the Alpha/Numeric Display:

"MELTCYC"

The fryer will start the melt-cycle mode. This is the required mode for melting solid shortening within the frypot. The fryer will generate **ON/OFF** heating cycles and will remain in this mode until 180°F (82°C) is reached or the mode is manually bypassed.

FOR USE WITH LIQUID SHORTENING, PRESS THE TEMPERATURE KEY FOR 4 SECONDS TO BYPASS THE MELT CYCLE.

"PREHEAT"

The fryer will generate a continuous heating cycle until it reaches the operator pre-programmed set-point or a default temperature of 350°F (177°C).

"READY"

When the frypot temperature is reached, **"READY"**, will appear in the Alpha/Numeric Display.

2. LOAD PRODUCT

Load product in basket(s) and set basket(s) in the fryer lift brackets. The basket(s) will automatically lower into the oil after the correct amount of time has been entered and the manual time key is pressed.

3. Press the **"MANUAL TIME KEY"** when "**READY**" appears in the Alpha/Numeric Display.

The previously set time (IN MINUTES) or **"0:00"** will begin to flash in the display.

4. PRESS THE UP ▲ AND DOWN ▼ ARROW KEYS TO ADJUST THE AMOUNT OF TIME.

CONTINUED

MANUAL OPERATION

5. Press the **MANUAL TIME** key after the correct amount of time has been entered.

The fryer basket will automatically lower into the cooking shortening/oil. The displayed time will begin to count down the remaining time.

NOTE: To stop the manual cooking function before time has expired:

Press and hold the **MANUAL TIME** key for 1-second.

The display will revert to **"0:00."**

The control will produce an audible signal.

The basket will automatically rise.

Manual has it's own set point. Use right/left arrow keys to adjust.

May be adjusted during cook cycle.

SHUTDOWN

1. Press and hold the **ON/OFF** key on the main control panel for 2 seconds.

The alpha/numeric will display **"OFF."**
The baskets will automatically lift.
The display will become blank.

2. Turn the Master Power Switch (located behind the front access door) to the **"OFF"** position.

CONTROL PROGRAMMING OVERVIEW

Initial access to the programming mode must start with the control in the **OFF** position.

Entering the **"PROGRAM"** mode provides the operator with the ability to modify all control functions and provides access to the boil-out **"BOIL"** feature.

The fryer programming capability offers the following functions and features. Some of these operating parameters have been preset at the factory and are described in the control programming section:

"Boil"	**"Basket Lift"**	**"Language"**	**"IdleMode"**	**"Max Time"**	**"Hi Band"**
"Set-Point"	**"LiftSync"**	**"TempDisp"**	**"Filter"**	**"Hi Temp"**	**"Melt Ct"**
"Product"	**"Temp F-C"**	**"AlarmSet"**	**"Filter Cnt"**	**"Lo Band"**	**"Preheat Band"**

Press and hold the **"PROGRAM"** key for a period of 5 to 10 seconds.

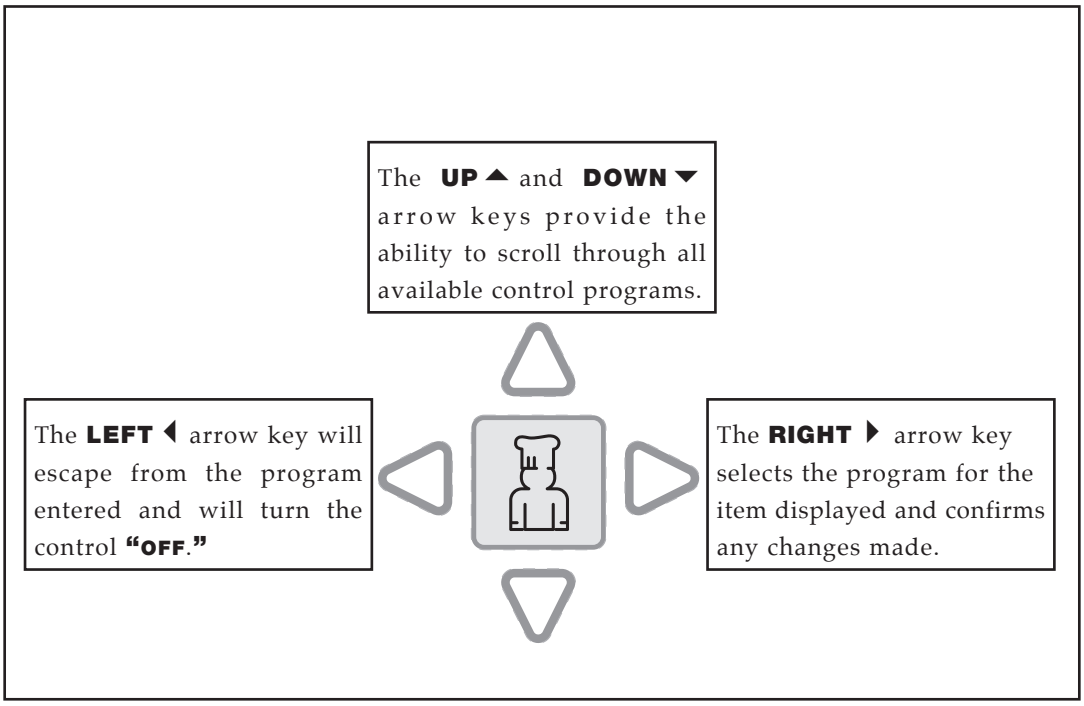

To exit the control programming mode at any time, press and hold the LEFT ◀ arrow key.

DELUXE CONTROL OPERATION

PROGRAMMING THE CONTROL

Starting with the control in the **OFF** position, press and hold the **"PROGRAM"** key for a period of 5 to 10 seconds.

"Boil" will always appear as the first item in the display whenever the **"PROGRAM"** key is initially pressed. Detailed boil-out instructions are located in the **OPERATION** section of this manual.

Press the DOWN ▼ arrow key to bypass the "Boil" program.

"Boil"

Boil

Press the right ▶ arrow key enter the **"Boil"** program **(SEE OPERATION SECTION)**.

NOTE: Before entering this program, make certain the frypot is empty of all oil or shortening. Close the frypot drain. Carefully follow the manufacturer's mixing directions and fill the frypot with a mixture of cold water and fryer boil-out solution.

Ready ?

The display will indicate **"READY ?"**. Press the right ▶ arrow key to start the boil-out function. The boil-out solution will begin to heat to a temperature of 195°F (91°C). When the temperature has been reached, the display will begin a 10 minute countdown.

CAUTION

DO NOT LEAVE THE FRYER UNATTENDED DURING THE BOIL-OUT PROCESS. THE FRYER MUST BE CONTINUOUSLY MONITORED FOR BOIL-OVER CONDITIONS, PARTICULARLY IN HIGH-ALTITUDE LOCATIONS. IF BOIL-OVER IS IMMINENT, IMMEDIATELY TURN THE MASTER POWER SWITCH OFF AND ALLOW THE SOLUTION TO COOL. WHEN THE SOLUTION HAS COOLED, RE-ENTER THE BOIL-OUT MODE.

At the end of the boil-out period, an alarm will sound and the control will revert to the **OFF** state.

To exit the control programming mode at any time, press and hold the LEFT ◀ arrow key.

PROGRAMMING THE CONTROL

"SetPoint

This program allows the operator to change the temperature of the frypot oil/shortening. The set-point temperature of the oil/shortening can be adjusted from a range of 250°F to 450°F (121°C to 232°C). The factory default is set at 350°F (177°C).

Press the Up ▲ or Down ▼ arrow keys to scroll until **"SetPoint"** appears in the display. Press the right ▶ arrow key to enter the program. Display stops flashing. The previously set temperature will appear in the display. Press the Up ▲ or Down ▼ arrow keys to change the setting. When the correct set-point appears, press the right ▶ arrow key to confirm the setting. Display flashes. Press the down ▼ arrow key to advance the control to the next program feature.

To exit the control programming mode at any time, press and hold the LEFT ◀ arrow key.

PROGRAMMING THE CONTROL

"Product"

Product

The fryer control has been preset at the factory with four product menu items and two programmable spaces in the dual control.

1. Fries **2. Nuggets** **3. Fish** **4. Chicken** **5. PRODUCT A** **6. PRODUCT B**

The number of available product keys is directly linked to the **"LiftSync"** program that provides the ability to raise both baskets simultaneously or independently. If **"LiftSync"** is set in the **"ON"** position to raise both baskets at the same time, the **"Product"** function provides six available product keys for programming. If **"LiftSync"** is set to the **"OFF"** position to raise each basket independently, the **"Product"** control feature provides twelve available product keys for programming, six on each side of the control. When received from the factory **"LiftSync"** is set in the **"OFF"** position for independent basket operation.

NOTE: If **"LiftSync"** is to remain in the **"OFF"** position to provide independent basket operation for the purpose of frying two individual products simultaneously, the cooking temperature for each product must be the same. The fryer will use the higher temperature menu item.

The **"Product"** feature provides the operator with the ability to modify all presets and/or program additional product menu items as required.

Press the Up ▲ or Down ▼ arrow keys to scroll until **"Product"** appears in the display.

"Item"

ItEr

Product A

The sub-menu provides the operator with the ability to rename an existing programmed product or add a program to one of the blank program keys, i.e., **PRODUCT A** or **PRODUCT B**.

CONTINUED

PROGRAMMING THE CONTROL

"Product"

Product

"Item"

Press and hold any one of the twelve product keys to be programmed or modified.

The product, as currently named, will begin to flash in the display.

Press the Right ▶ arrow key. The first letter of the product name will begin to flash. Press the Up ▲ or Down ▼ arrow keys to scroll until the first letter changes as required (UPPER CASE, LOWER CASE, NUMBERS, OR BLANK SPACE IS AVAILABLE THROUGH THE SCROLLING PROCESS). Press the Right ▶ arrow key. The second letter of the product name will begin to flash. Press the Up ▲ or Down ▼ arrow keys to scroll until the second letter is changed as required. Continue this process until the desired name appears. **NOTE: There are 8 spaces available for the product name. ALL 8 spaces must be filled with a letter, number or blank space to complete the setting.**

When the correct name is displayed, press the Left ▶ arrow key to confirm the selection. The named product will start flashing. Display flashes. Press the Up ▲ or Down ▼ arrow key to advance the control to the next setting option for this product as directed on the following pages:

Time Mod *Cook Time* *SetPoint* *ShakeTime* *Hold Time*

Entry into the Product programming mode allows the operator to program all available product keys. To continue programming additional items, press and hold the next product key to be programmed and follow the above instructions.

Off

After the final **"Product"** key has been programmed, the **LEFT** ◀ arrow key must be pressed to completely exit the control programming mode. The control will revert to the **"OFF"** position. To program control features other than **PRODUCT,** press and hold the **"PROGRAM"** key for a period of 5 to 10 seconds from the **"OFF"** position.

Press the Up ▲ or Down ▼ arrow keys and scroll to the program function to be set.

PROGRAMMING THE CONTROL

"Product"

Product

"TimeMod"

OFF
TimeMod

This sub-menu allows the operator to compensate for any drop in oil/shortening temperature as it relates to cooking start time. In the **"ON"** position, the product countdown timer will not start until the oil temperature reaches the set-point temperature. In the **"OFF"** position, the product countdown timer will start as soon as the product key is pressed. This item is set to **"OFF"** at the factory.

Press the right ▶ arrow key to select **"TimeMod."** Display stops flashing. Press the Up ▲ or Down ▼ arrow keys to scroll to the value of **"ON"** or **"OFF."** When the correct value is displayed, press the right ▶ arrow key to confirm the setting. Display flashes. Press the down ▼ arrow key to advance the control to the next setting option.

"CookTime"

5:00
CookTime

This sub-menu allows the operator to adjust a previously programmed cooking time as determined by the operator or as shown on the product chart. The control provides frying time adjustment up to a period of 60 minutes.

Press the right ▶ arrow key to select **"CookTime."** The previously set programmed cook time or **"0000"** will appear in the display. Display stops flashing. Press the Up ▲ or Down ▼ arrow keys to change the setting. When the correct time appears, press the right ▶ arrow key to confirm the setting. Display flashes.

Press the down ▼ arrow key to advance the control to the next setting option.

"SetPoint"

Setpoint

This sub-menu allows the operator to adjust the temperature of the fry-pot oil/shortening as required from the temperatures shown on the product chart.
The set-point temperature of the oil/shortening can be adjusted from a range of 250°F to 450°F (121°C to 232°C).

Press the right ▶ arrow key to enter the program. Display stops flashing. The previously set temperature will appear in the display. Press the Up ▲ or Down ▼ arrow keys to change the setting. When the correct set-point appears, press the right ▶ arrow key to confirm the setting. Display flashes. Press the down ▼ arrow key to advance the control to the next setting.

PROGRAMMING THE CONTROL

"Product"

Product

"ShakTime"

OFF
ShakTime

The **"ShakTime"** sub-menu provides the operator with a programmed time period during which the baskets will automatically lift to half the normal raised position so that the operator can shake each basket. When programmed into a product procedure, an alarm will sound to alert the operator at the start of the **"ShakTime"** cycle and will continue until the activated product key is pressed. The amount of **"ShakTime"** can only be programmed up to the maximum amount of frying time allotted to the programmed product.

There is no **"ShakTime"** programmed into any of the products shown on the product chart. The control provides shake time adjustment from **"OFF"** up to a period of 60 minutes. When received from the factory, shake-time will indicate **"OFF"** in the display for all programmed preset items.

Press the right ▶ arrow key to enter the **"ShakTime"** sub-menu. Display stops flashing. Press the Up ▲ or Down ▼ arrow keys to change the setting. When the desired amount of **"ShakTime"** appears, press the right ▶ arrow key to confirm the setting. If no shake time is required, press the Down ▼ arrow key and scroll until **"OFF"** appears in the display. When the correct setting appears, press the right ▶ arrow key to confirm. Display flashes. Press the down ▼ arrow key to advance the control to the next sub-menu setting.

To exit the control programming mode at any time, press and hold the LEFT ◀ arrow key.

PROGRAMMING THE CONTROL

"Product"

Product

"HoldTime"

1:00
HoldTime

This sub-menu allows the operator to program a time interval to lift the basket(s) and allow the product to drain before signaling the end of the frying cycle. There is no **"HoldTime"** programmed into any of the products shown on the product chart. The control provides hold time adjustment from **"OFF"** up to a period of 60 minutes.

Press the right ▶ arrow key to enter the **"HoldTime"** sub-menu. Display stops flashing. The previously set hold time or **"OFF"** will appear in the display. Press the Up ▲ or Down ▼ arrow keys to change the setting. When the correct **"HoldTime"** appears, press the Right ▶ arrow key to confirm the setting. If no hold time is required, press the Down ▼ arrow key and scroll until **"OFF"** appears in the display. When the correct setting appears, press the Right ▶ arrow key to confirm. Display flashes.

Entry into the Product programming mode allows the operator to program all available product keys. After the final **"Product"** key has been programmed, the **LEFT** ◀ arrow key must be pressed to completely exit the control programming mode. The control will revert to the **"OFF"** position.

Off

To program control features other than *Product,* press and hold the **"PROGRAM"** key for a period of 5 to 10 seconds from the **"OFF"** position. Press the Up ▲ or Down ▼ arrow keys and scroll to the program function to be set.

To exit the control programming mode at any time, press and hold the LEFT ◀ arrow key.

PROGRAMMING THE CONTROL

"BsktLift"

The Basket Lift program provides the operator with the ability to enable or disable the automatic basket lift function. In the **"ON"** position, the baskets will lift automatically as programmed in the selected product procedure. In the **"OFF"** position, both baskets will remain in the raised position until manually dropped by the operator. This function is set in the **"ON"** position as received from the factory. **IT IS STRONGLY RECOMMENDED THAT THE "BSKTLIFT" REMAIN AT THIS SETTING.** If it is ever necessary to transition from the disabled **"OFF"** position to the enabled **"ON"** position, the control display will indicate **"POWERDOWN"** requiring the operator to perform a control shutdown in order to synchronize the baskets with the revised state of the control.

Turn the Master Power Switch (located behind the front access door) to the **"OFF"** position.

Press the Up ▲ or Down ▼ arrow keys to scroll until **"BsktLift"** appears in the display. Press the Right ▶ arrow key to enter the program. Display stops flashing. The previous setting will appear in the display. Press the Up ▲ or Down ▼ arrow keys to change the setting. When the correct setting appears, press the Right ▶ arrow key to confirm. Display flashes. Press the Down ▼ arrow key to advance the control to the next setting option.

"LiftSync"

AVAILABLE ON DUAL-CONTROL FRYERS ONLY. The **"LiftSync"** program provides the ability to raise both basket lifts simultaneously by selecting the **"ON"** position. The factory preset is in the **"OFF"** position for independent operation.

Press the Up ▲ or Down ▼ arrow keys to scroll until **"LiftSync"** appears in the display. Press the Right ▶ arrow key to enter the program. Display stops flashing. Press the Up ▲ and Down ▼ arrow keys to toggle between **"ON"** and **"OFF."** When the selection has been made, press the Right ▶ arrow key to to confirm the selection. Display flashes. Press the Down ▼ arrow key to advance the control to the next programming function.

"Temp F/C"

The temperature display can be shown in degrees Fahrenheit or Celsius.

Press the Up ▲ or Down ▼ arrow keys to scroll until **"Temp F/C"** appears in the display. Press the Right ▶ arrow key to enter the program. Display stops flashing. The current setting will appear in the display. Press the Up ▲ or Down ▼ arrow keys to toggle between **"F"** and **"C."** Press the Right ▶ arrow key to accept the desired selection. Display flashes. Press the Down ▼ arrow key to advance the control to the next programming function.

To exit the control programming mode at any time, press and hold the LEFT ◀ arrow key.

DELUXE CONTROL OPERATION

PROGRAMMING THE CONTROL

"Language"

The language option is only available in English **"ENG"** at this time.

ENG
Language

"TempDisp"

ON
TempDisp

The operator can choose to have the fryer oil temperature continuously shown in the display during a product cooking sequence by selecting **"ON"** or to a normal display sequence by selecting **"OFF."** The function is set to **"ON"** at the factory.

Press the Up ▲ or Down ▼ arrow keys to scroll until **"TempDisp"** appears in the display. Press the Right ▶ arrow key to enter the program. Display stops flashing. The current setting of **"ON"** or **"OFF"** will appear in the display. Press the Up ▲ or Down ▼ arrow keys to change the setting. When the correct setting appears, press the Right ▶ arrow key to confirm the setting. Display flashes. Press the Down ▼ arrow key to advance the control to the next programming function.

"AlarmSet"

HI
Alarm Set

The operator is able to set the volume of the fryer alarm to off, low, medium or high **"OFF"**, **"LO"**, **"MED"** or **"HI."** The alarm is set to **"HI"** when received from the factory.

Press the Up ▲ or Down ▼ arrow keys to scroll until **"AlarmSet"** appears in the display. Press the Right ▶ arrow key to enter the program. Display stops flashing. The current setting will appear in the display. Press the Up ▲ or Down ▼ arrow keys to toggle among the available choices. When the correct setting appears, press the Right ▶ arrow key to confirm the setting. Display flashes. Press the Down ▼ arrow key to advance the control to the next programming function.

"IdleMode"

30:00
IdleMode

The idle mode allows the operator to set a period of time during which the fryer is not being used but still maintains full fryer oil temperature. When idle time expires, the fryer oil temperature will drop to 250°F (121°C) at which point the oil/shortening must be reheated before frying additional product. This time period can be adjusted between **"OFF"** and **60:00** minutes. **The factory default is set at 30 minutes idle time.**

Press the Up ▲ or Down ▼ arrow keys to scroll until **"IdleMode"** appears in the display. Press the Right ▶ arrow key to enter the program. Display stops flashing. If no idle time is required, press the Down ▼ arrow key until **"OFF"** appears in the display. Press the Up ▲ or Down ▼ arrow keys to change the setting. When the correct setting appears, press the Right ▶ arrow key to confirm. Display flashes. Press the Down ▼ arrow key to advance the control to the next programming function.

"IdleMode" can be interrupted at any time by pressing any of the 12 product preset keys. The fryer will immediately begin to preheat to the set-point temperature. The baskets can be dropped only after the set-point temperature has been reached.

To exit the control programming mode at any time, press and hold the LEFT ◀ arrow key.

PROGRAMMING THE CONTROL

"FILTER"

OFF
Filter

The filter program is a monitor to notify the operator to service the oil/shortening after a specified number of product loads established and set in the filter count **"FILTER CNT"** programming function. This feature is set to **"OFF"** at the factory. **THE NUMBER OF PRODUCT LOADS CAN BE ADJUSTED BY THE OPERATOR THROUGH THE FILTER COUNT PROGRAM. FILTER COUNT WILL AUTOMATICALLY ADJUST FILTER MONITOR ALERTS TO ONE OF THE THREE SELECTIONS SHOWN AS SET BY THE OPERATOR.**

"Off"

OFF
Filter

When set to the **"OFF"** position, the filter monitor is disabled and will **NOT** notify the operator to service the oil/shortening.

"ALRM"

ALRM
Filter

Filter Now

Set to alarm **"ALRM,"** this feature will provide an audible alarm and the display will indicate "FILTER NOW" as a reminder to the operator after every 15 product loads or the number of processed fry loads set by the operator in the **"FILTER CNT"** program function. When set to **"ALRM"** additional fry loads can be processed and the alarm can be silenced by pressing the **ON/OFF** power key on the main control panel to the **"OFF"** position

"LocH"

LocH
Filter

When the program mode is changed to the lock **"LOCH"** position, an audible alarm will sound and the fryer will become inoperable following the number of processed fry loads set by the operator in the **"FILTER CNT"** program function. The control will only become operable after the oil/shortening has been serviced.

Press the Up ▲ or Down ▼ arrow keys to scroll until **"FILTER"** appears in the display. Press the Right ▶ arrow key to enter the program. Display stops flashing. Press the Up ▲ or Down ▼ arrow keys to toggle among the available choices. When the desired setting appears, press the Right ▶ arrow key to accept the selection. Display flashes. Press the Down ▼ arrow key to advance the control to the next programming function.

To exit the control programming mode at any time, press and hold the LEFT ◀ arrow key.

PROGRAMMING THE CONTROL

"FILTER CNT"

15
Filter Cnt

The filter count program allows the operator to change the number of processed fry loads within a range of 5 to 15 before the monitor notifies the operator to service the oil/shortening. The factory default is set at 15 loads. **THE "FILTER" MONITOR PROGRAM MUST BE ACTIVATED IN ORDER TO MAKE THE "FILTER CNT" PROGRAM FUNCTIONAL.**

Press the Up ▲ or Down ▼ arrow keys to scroll until **"FILTER CNT"** appears in the display. Press the Right ▶ arrow key to enter the program. Display stops flashing. Press the Up ▲ or Down ▼ arrow keys to until the desired number of processed loads appears in the display. When the desired setting appears, press the Right ▶ arrow key to accept the selection. Display flashes. Press the Down ▼ arrow key to advance the control to the next programming function.

"MAX TIME"

3:00
Max Time

"MAX TIME" provides notification when the temperature of the oil is lower than the set-point temperature. The factory set default is 3 minutes and should not be adjusted by the operator. Press the down ▼ arrow key to advance the control to the next programming function.

LoTemp

"HI TEMP"

450°F
Hi Temp

"HI TEMP" allows the operator to trigger an automatic fryer shut-down at a specified oil temperature within a range of 250°F to 450°F (121°C to 232°C). This safety feature is provided in the event the actual oil temperature exceeds the oil set-point temperature due to equipment malfunction. The factory default is set at 450°F (232°C).

HOT

Press the Up ▲ or Down ▼ arrow keys to scroll until **"HI TEMP"** appears in the display. Press the right ▶ arrow key to enter the program. Display stops flashing. Press the Up ▲ or Down ▼ arrow keys to scroll until the desired shut-down temperature appears in the display. When the desired temperature appears, press the right ▶ arrow key to accept the selection. Press the down ▼ arrow key to advance the control to the next programming function.

PROGRAMMING THE CONTROL

"LO BAND"

21°F
Lo Band

"LO BAND" provides an alarm notification when the temperature of the oil is lower than the set-point temperature. The adjustment range is between 5°F and 100°F (3°C and 56°C) with a factory preset of 21°F (12°C).

Low Temp

Press the Up ▲ or Down ▼ arrow keys to scroll until **"LO BAND"** appears in the display. Press the Right ▶ arrow key to enter the program. Display stops flashing. Press the Up ▲ or Down ▼ arrow keys to scroll until the desired number appears in the display. When the desired setting appears, press the Right ▶ arrow key to accept the selection. Display flashes. Press the Down ▼ arrow key to advance the control to the next programming function.

"HI BAND"

25°F
Hi Band

"HI BAND" provides an alarm notification when the temperature of the oil becomes higher than the set-point temperature. The adjustment range is between zero and 100°F (56°C) with a factory preset of 25°F (14°C).

Hi Temp

Press the Up ▲ or Down ▼ arrow keys to scroll until **"HI BAND"** appears in the display. Press the Right ▶ arrow key to enter the program. Display stops flashing. Press the Up ▲ or Down ▼ arrow keys to scroll until the desired number appears in the display. When the desired setting appears, press the Right ▶ arrow key to accept the selection. Display flashes. Press the Down ▼ arrow key to advance the control to the next programming function.

"MELT CT"

0:10
Melt Ct

The fryer control includes a melt function with **ON/OFF** pulsed heating cycles for the purpose of melting solid shortening at a continuous but slower rate to assure full melt-down. The operator has the ability to control the **ON/OFF** pulse rate between 00:01 and 00:60 seconds. The factory default is set for 10 seconds (00:10).

Press the Up ▲ or Down ▼ arrow keys to scroll until **"MELT CT"** appears in the display. Press the Right ▶ arrow key to enter the program. Display stops flashing. Press the Up ▲ or Down ▼ arrow keys to scroll until the desired time appears in the display. When the desired setting appears, press the Right ▶ arrow key to accept the selection. Display flashes. Press the Down ▼ arrow key to advance the control to the next programming function.

"PREHEAT BAND"

10°F
Preheat Band

The **"PREHEAT BAND"** is used to prevent the oil temperature in the frypot from reaching the actual set-point temperature in order to compensate for temperature override as the fryer calls for heat. This program feature is set to 10°F (6°C) at the factory.
It is strongly urged that the "PREHEAT BAND" remain at this setting.

To exit the control programming mode, press and hold the LEFT ◀ arrow key.

DELUXE CONTROL TROUBLESHOOTING

1. **FRYER WILL NOT POWER-UP**
   - A. Make certain cord is plugged in and breaker is turned “ON.”
   - B. Ensure the drain switch is turned to the “CLOSED” position.
   - C. Ensure the master switch is turned to the “ON” position.

2. **FRYER WILL NOT HEAT**
   - A. Ensure the gas valve is turned “ON.”
   - B. Ensure the gas hose is connected.
   - C. Ensure the hi-limit is not tripped.
   - C. Ensure there is oil in the frypot.

3. **PUMP WILL NOT RETURN OIL**
   - A. Ensure there is oil in the mobile oil trolley.
   - B. Ensure the pump switch is turned “ON.”
   - C. Push the reset button located behind the front access door to activate the pump motor.

4. **BASKETS WILL NOT DROP**
   - A. Ensure the basket lift is programmed for basket drop.

TEMPERATURE VERIFICATION

The temperature of the cooking oil/shortening and the temperature set-point can be verified at any time.
Press the **"Temperature"** key **once** to verify the temperature of the oil/shortening.
Press the **"Temperature"** key **twice** to verify the set-point temperature.
The fryer control will automatically exit either of these readings after four (4) seconds.

If a defective probe is suspected, measure the temperature of the oil/shortening with a thermometer. Compare the thermometer reading with temperature shown in the control to make certain the readings are reasonably close. If there is a wide discrepancy, perform a complete fryer shutdown and contact Alto-Shaam service.

ERROR CODE DISPLAY MESSAGES	
PROBABLE CAUSE	SOLUTION
E-01 AMBIENT — Ambient temperature surrounding the controller is too high or too low.	Adjust the system or the environment so that the ambient air surrounding the control is above 32°F (0°C) or below 160°F (80°C).
E-02 DEFAULTS — Controller EEPROM initialization (FIRST TIME USE).	Wait for approximately 30 to 120 seconds. If the message does not terminate, return the controller to the factory.
E-10 FIXPROBE — Probe shorted.	Contact Alto-Shaam service.
E-20 FIXPROBE — Probe open.	Contact Alto-Shaam service.
E-30 LOWTEMP — Exceeded maximum amount of time to achieve temperature.	Turn power **OFF** and reset the control.
E-31 HITEMP — Exceeded set temperature by X degrees.	Turn power **OFF** and allow fryer to cool. Contact Alto-Shaam service.
E-86 SERVICE — Preset Data Error (EEPROM data error)	Contact Alto-Shaam service.
NOCOMMS SERVICE — Problem with connectors or cable.	Check ribbon cable from main board to slave board. Contact Alto-Shaam service.

DELUXE CONTROL TROUBLESHOOTING

1. Press and hold the **ON/OFF** key for 1 second.

One of the following will appear in the alpha/numeric display:

A. "**READY**" along with "**- - - -** " in the L.E.D. display.
The fryer is in the cooking range.
NOTE: For best results, do not cook product until the display is in this mode.

B. "**HI TEMP**"
The pot temperature is 40°F (22°C) or higher than the set-point.

C. "**LO TEMP**"
The pot temperature is 21°F (12°C) or lower than the set-point.

D. "**PROBLEM**"
Indicates a heating problem.

E. "**HOT**"
The pot temperature is more than 410°F (210°C) or 395°F (202°C) for CE (European Community fryers).

F. "**FIXPROBE**"
The control has detected a problem in the temperature measuring circuit, including the probe.
NOTE: A decimal point "▪ " between L.E.D. digits 1 and 2 in either display indicates the control is calling for heat.

CAUTION

THIS SECTION IS PROVIDED FOR THE ASSISTANCE OF QUALIFIED SERVICE TECHNICIANS ONLY AND IS NOT INTENDED FOR USE BY UNTRAINED OR UNAUTHORIZED SERVICE PERSONNEL.

⚠ DANGER

DISCONNECT UNIT FROM POWER SOURCE BEFORE CLEANING OR SERVICING.

CAUTION

IT IS RECOMMENDED THIS APPLIANCE BE INSPECTED BY A QUALIFIED SERVICE TECHNICIAN AT REGULAR INTERVALS AS PART OF A STANDARD KITCHEN MAINTENANCE PROGRAM.

EXTENDED LIMITED FRYPOT WARRANTY

Alto-Shaam, Inc. warrants to the original purchaser that any frypot that is found to be defective in material or workmanship will, at Alto-Shaam's option, subject to provisions hereinafter stated, be replaced with a new or rebuilt frypot.

The labor warranty remains in effect for three (3) years from the shipping date. Alto-Shaam will bear shipping and normal labor charges for installation performed during standard business hours, and excluding overtime, holiday rates or any additional fees.

The parts warranty remains in effect for seven (7) years from the shipping date. Following the initial three (3) year labor warranty, Alto-Shaam will replace the frypot only, with freight, labor and all additional charges at the full responsibility of the owner/operator.

Extended frypot warranty coverage is subject to all remaining provisions as set forth in Alto-Shaam's standard published warranty.

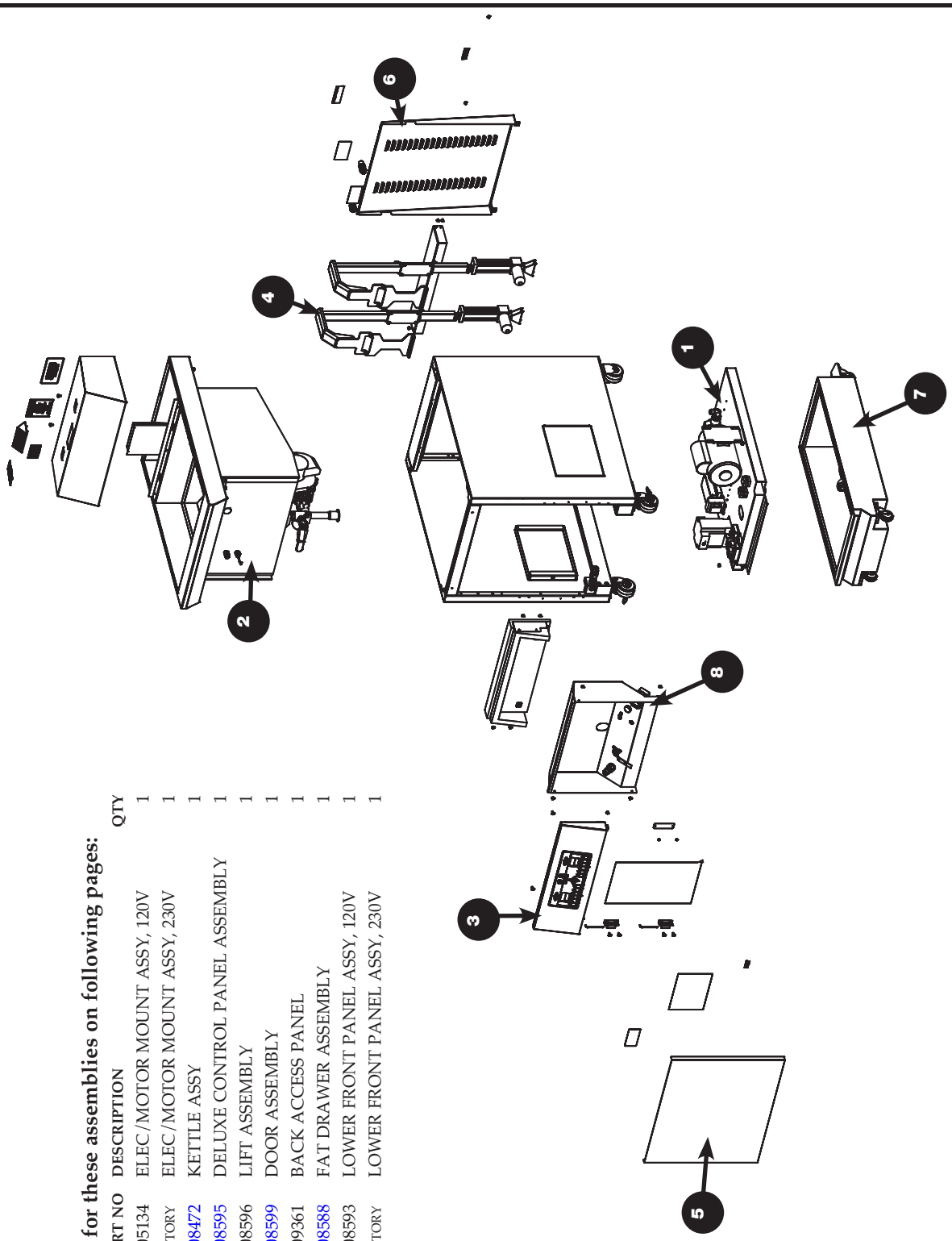

See details for these assemblies on following pages:

ITEM	PART NO	DESCRIPTION	QTY
1	5005134	ELEC/MOTOR MOUNT ASSY, 120V	1
CONTACT FACTORY		ELEC/MOTOR MOUNT ASSY, 230V	1
2	5008472	KETTLE ASSY	1
3	5008595	DELUXE CONTROL PANEL ASSEMBLY	1
4	5008596	LIFT ASSEMBLY	1
5	5008599	DOOR ASSEMBLY	1
6	1009361	BACK ACCESS PANEL	1
7	5008588	FAT DRAWER ASSEMBLY	1
8	5008593	LOWER FRONT PANEL ASSY, 120V	1
CONTACT FACTORY		LOWER FRONT PANEL ASSY, 230V	1

5008475 ELEC/MOTOR MOUNT ASSEMBLY, 120V

ITEM	PART NO	DESCRIPTION	QTY
1	1009269	MOTOR PLATE	1
2	MO-26835	5E W / S74 MOTOR	1
3	TN-34272	TRANSFORMER, 120V/240V-24V,150VA	1
4	TN-33282	TRANSFORMER, 230V/24V, 50A,	1
5	BN-34266	IGNITION MODULE, STARTER	1
6	BK-34372	T-BLOCK, MODULAR	1
7	BK-3019	T-BLOCK	1
8	BA-34563	RELAY BOARD-ASF-DELUXE	1
9	FI-33406	FERRITE FILTER-CLAMP	2
10	BP-3567	BEEPER	1
11	SP-33901	SPACER, 7/16 FOR .125 HOLE IN .062" BOARD	4
12	SP-33707	SPACER, SUPPORT, NYL, 1.4"	4
13	SC-2472	SCREW,6-32 X1/2,NC PHIL TRUSS M/S,18-8 SS	2
14	FT-28686	FITTING-# 10 37° X 1/2" NPTF	1
15	BU-26460	REDUCING BUSHING, 3/4X1/2 NPT	1
16	EB-28688	ELBOW-37° X 1/2" NPTF	1
17	5004611	WIRE SET-75G 120V DLX	1
18	SC-2069	SCREW, 8-32 X 1,NC PHILLIPS PAN	4
19	SC-26791	SCREW 10-32 X 1/4" PAN HEAD	8
20	SC-23455	6-32 X 3/8 RD HD	2
21	HG-22672	10-32 THREADED INSERT	1
22	NU-2215	NUT,10-32,NF HEX MS,# 18-8 S/S	2
23	SC-2071	10-32 X 3/4 PAN HD	1
24	SC-2365	6-32 X 1 1/4" ROUND HD	2
25	SC-25286	1/4-20 X 3/4" FLANGED HD	4

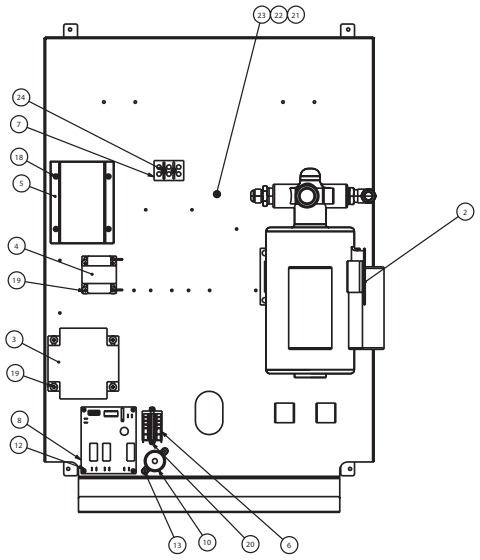

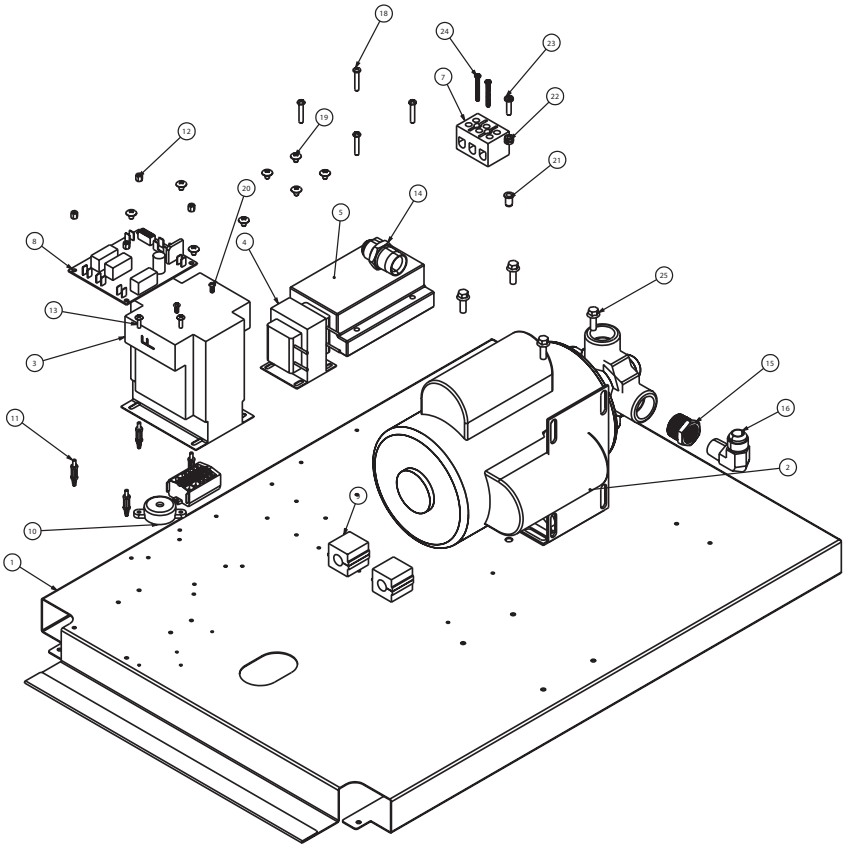

5008595 DELUXE PANEL CONTROL ASSEMBLY

ITEM	PART NO	DESCRIPTION	QTY
1	5008594	WELDMENT-CONTROL PANEL, DELUXE	1
2	5007396	ASSY-CIRCUIT BOARD	1
3	IN-22985	INSULATION, 1/2" CERAMIC WOOL	1
4	PE-28090	MAIN OVERLAY-WATLOW	1
5	WS-27045	WASHER, # 8, LOCK WASHER	4
6	NU-2296	NUT, HEX # 8-32	4
7	PE-28110	INSERT-MENU CARD	2

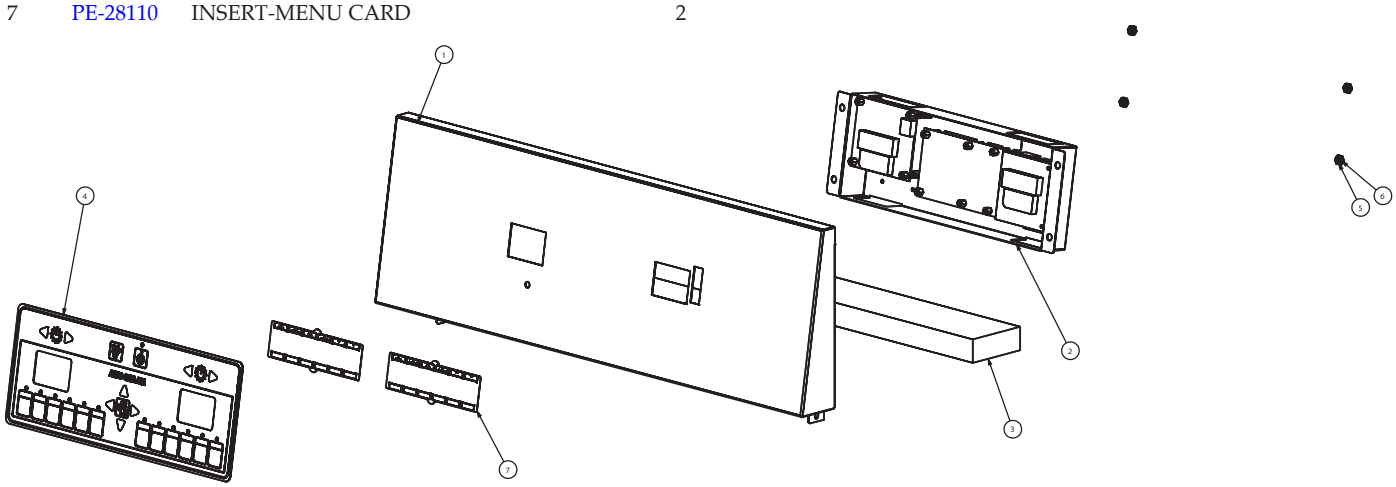

5008599 DOOR ASSEMBLY

ITEM	PART NO	DESCRIPTION	QTY
1	5009177	DOOR, ASF-75	1
2	1006303	BRACKET, MAGENT	1
3	RI-2097	#42 STAINLESS RIVET	6
4	MA-27568	MAGNET, SMCO, SILVER	1

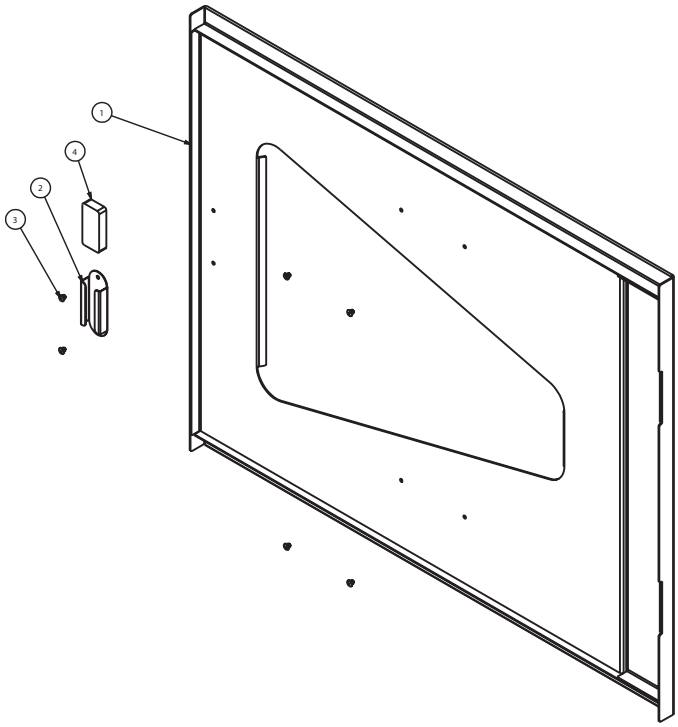

5008472 KETTLE AND GAS TRAIN

ITEM	PART NO	DESCRIPTION	QTY
1	KE-27084	FADO HRSN3, GAS	1
2	SA-27007	SEAL-SPARK PLUG	2
3	PI-27001	PIN-SPARK IGNITION	2
4	SA-27005	SEAL-SPARK PLUG	1
5	BN-34226	BURNER-HE GAS FRYER	1
6	SA-27006	SEAL-FAN BURNER	1
7	FA-34232	FAN, GAS FRYER	1
8	VA-27068	VALVE, VENTURI, GAS FRYER	1
9	SA-27930	SEAL-GASVALVE	1
10	VA-34260	VALVE, 24V, FRYER, GAS	1
11	VA-27081	ELBOW, FLANGE, VENTURI,	1
12	OR-27249	O-RING, 0.812O.D. X .94 DIA	1
13	FT-27476	FITTING, 1/2" M PIPE, 1/2" M FLARE	1
14	CP-28016	CAP-3/4 NPT	1
15	GL-27004	SEAL-GLASS SIGHT, ASFG	1
16	GL-27002	GLASS BURNER INDICATOR	1
17	HL-27003	HOLDER-GLASS SIGHT	1
18	SC-2459	8-32 X 1/4" PHIL SCREW	2
19	NU-27820	NUT-HEX 6MM WITH STAR WASHER	16
20	NU-27851	NUT-HEX 5MM WITH STAR WASHER	4
21	1008588	BRACKET-CHIMNEY HOLDING	2
22	SC-2661	SCREW, 10-32 X 1/2, NF PHIL TRUSS	2
23	5007645	FLUE-ASF-60G	1
24	SC-27384	SCREW-# 10-16 SELF DRILLING	4
25	VA-34531	VALVE-SAFETY 24VAC 1/2 NPT	1
26	NP-26220	NIPPLE-1/2"-14 NPT	1
27	FT-27250	FITTING-1/4"COMPRESSIONX3/8NPT	1
28	FT-27251	FERRULE, COMPRESSION, 6MM	1
29	5005200	WELDMENT, PROBE-REDUCER,	1
30	5008473	DRAIN ASSEMBLY-75G	1
31	IN-27322	INSULATION, SIDE PANEL,	2
32	HO-28689	HOSE-1/2ID X 36" GAS FLEXIBLE	1

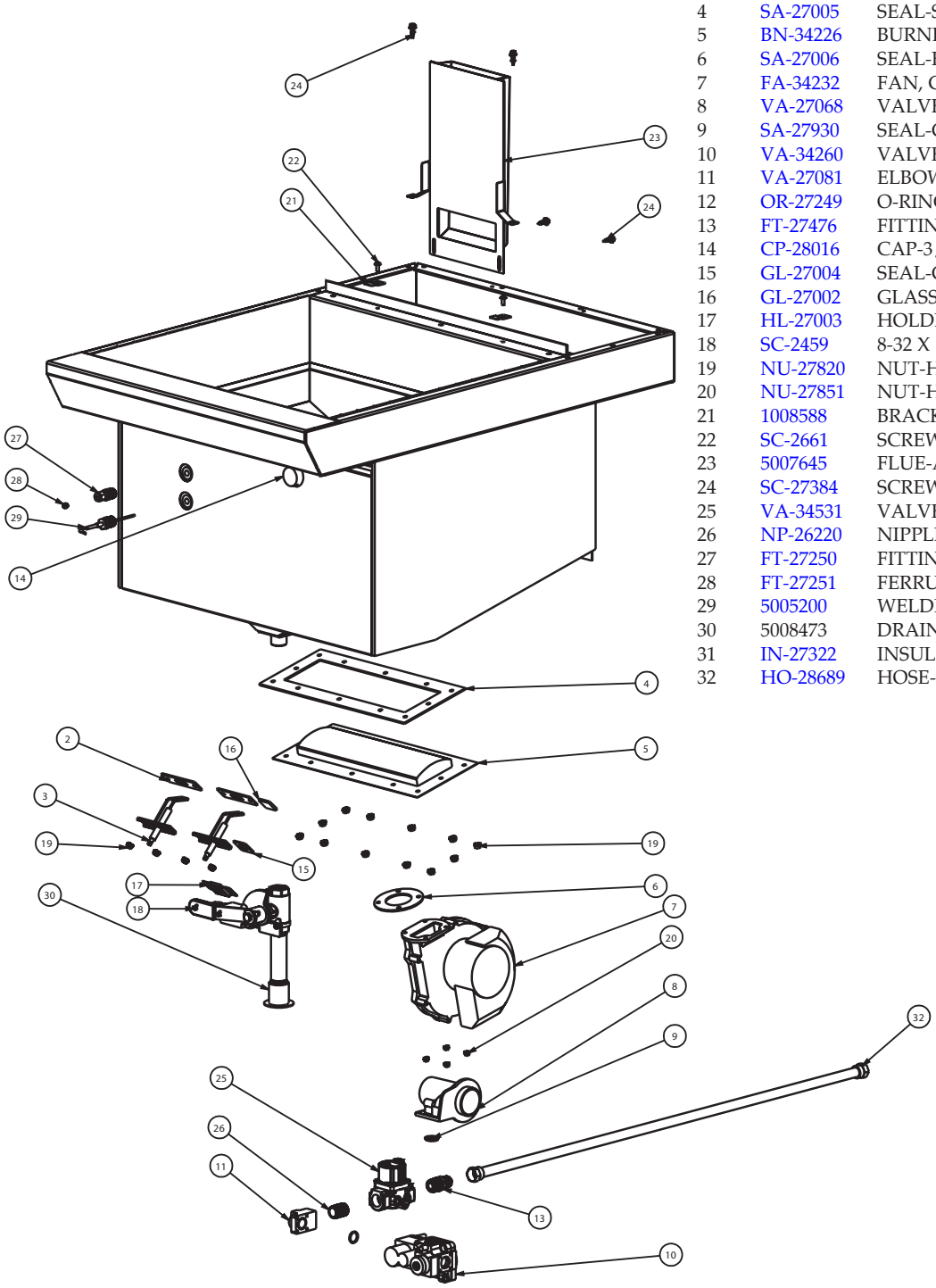

5008593 LOWER FRONT PANEL ASSY, 120V

ITEM	PART NO	DESCRIPTION	QTY
1	1009355	PANEL, FRONT LOWER ASF-75G	1
2	TT-34245	THERMOSTAT, HI-LIMIT	1
3	PA-27057	PLATE-LIGHT MOUNTING	2
4	LT-34281	LIGHT-ALARM	1
5	LT-34280	LIGHT-IGNITION ALARM	1
6	SW-34254	SWITCH, CAM, FOR SINGLE PHASE	1
7	LI-34252	LIGHT-PUMP PUSHBUTTON	1
8	SW-34240	PUSHBUTTON SWITCH-PUMP	1
9	VA-28274	VALVE-BALL 1/2" NPT PANEL MOUNT	1
10	FT-28008	FITTING-1/2 NPT X 1/2 QUICK DISCONNECT	1
11	FT-28275	FITTING-1/2-14 NPTF X 37° CONNECTOR	1
12	SC-22271	SCREWS,M4-0.7X6MM PHIL	2
13	PG-3344	1/2" HOLE PLUG	1
14	FT-28661	FITTING-ADAPTER 37° TO NPTF	1
15	TE-28662	TEE-37°X37°XNPTF	1
16	SC-28288	SCREW-10-24 X .375 PHMS	2
17	SC-26791	SCREW 10-32 X 1/4" PAN HEAD	1
18	EB-28687	ELBOW-# 10 37° X 37°	1

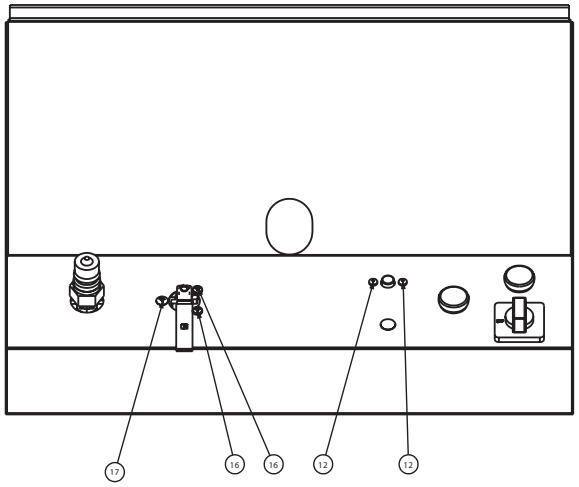

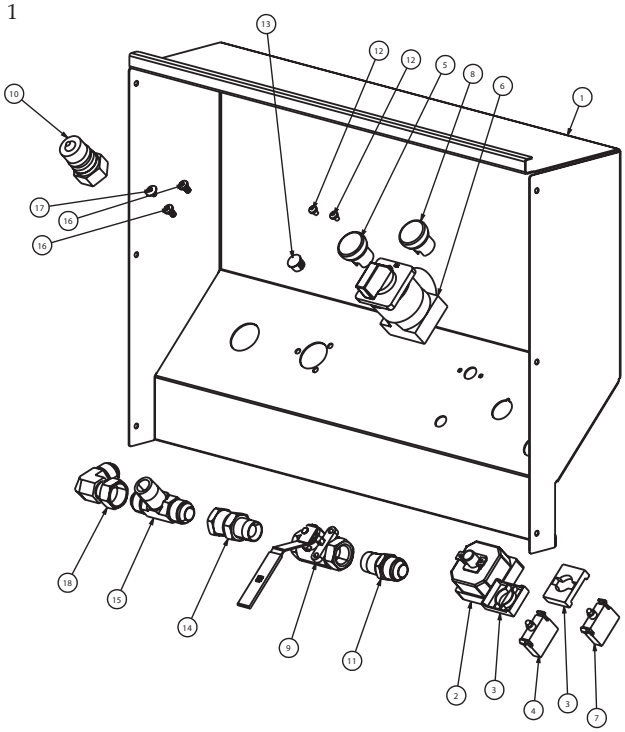

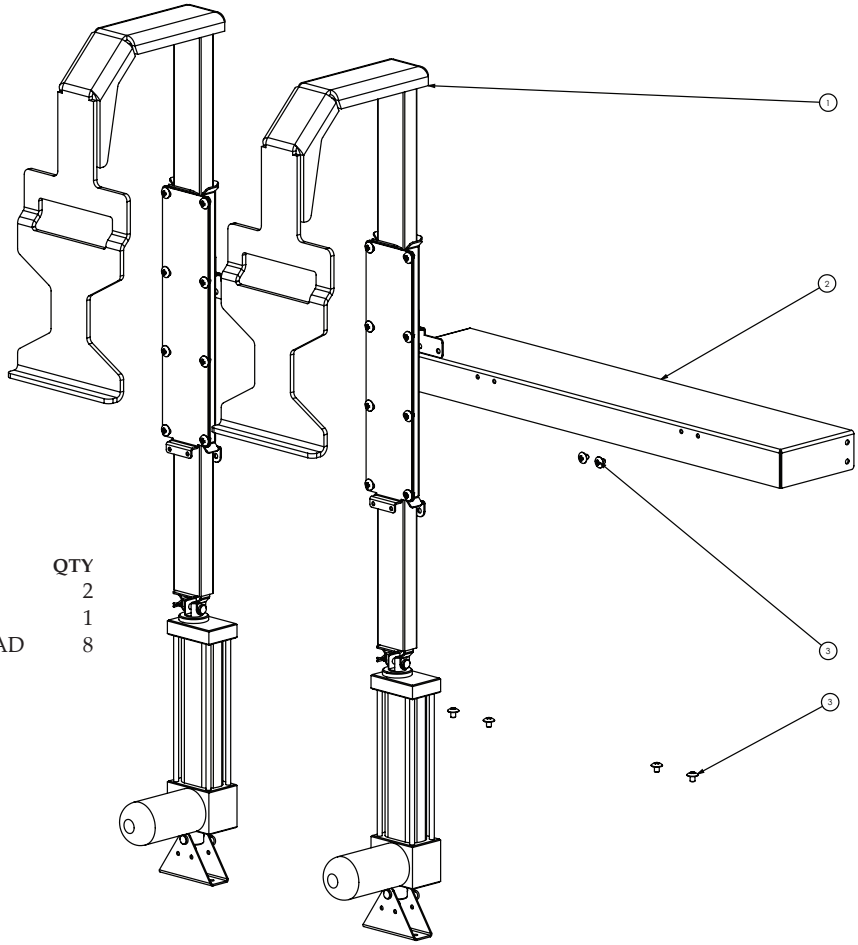

5008596 **LIFT ASSY**

ITEM	PART NO	DESCRIPTION	QTY
1	5008597	SINGLE LIFT ASSEMBLY	2
2	1009358	BRACKET, LIFT SUPPORT	1
3	SC-26791	SCREW 10-32 X 1/4" PAN HEAD	8

5008588 **FAT DRAWER ASSY**

ITEM	PART NO	DESCRIPTION	QTY
1	5008589	WLDMT-FAT DRAWER	1
2	CS-27054	CASTER, 2" WHEEL	2
3	CS-27253	CASTER, 2" WHEEL	2
4	5008591	FILTER CARTRIDGE	1
5	SC-26791	SCREW 10-32 X 1/4" PAN HEAD	16
6	HO-27649	HOSE, FRYER FILTER	1

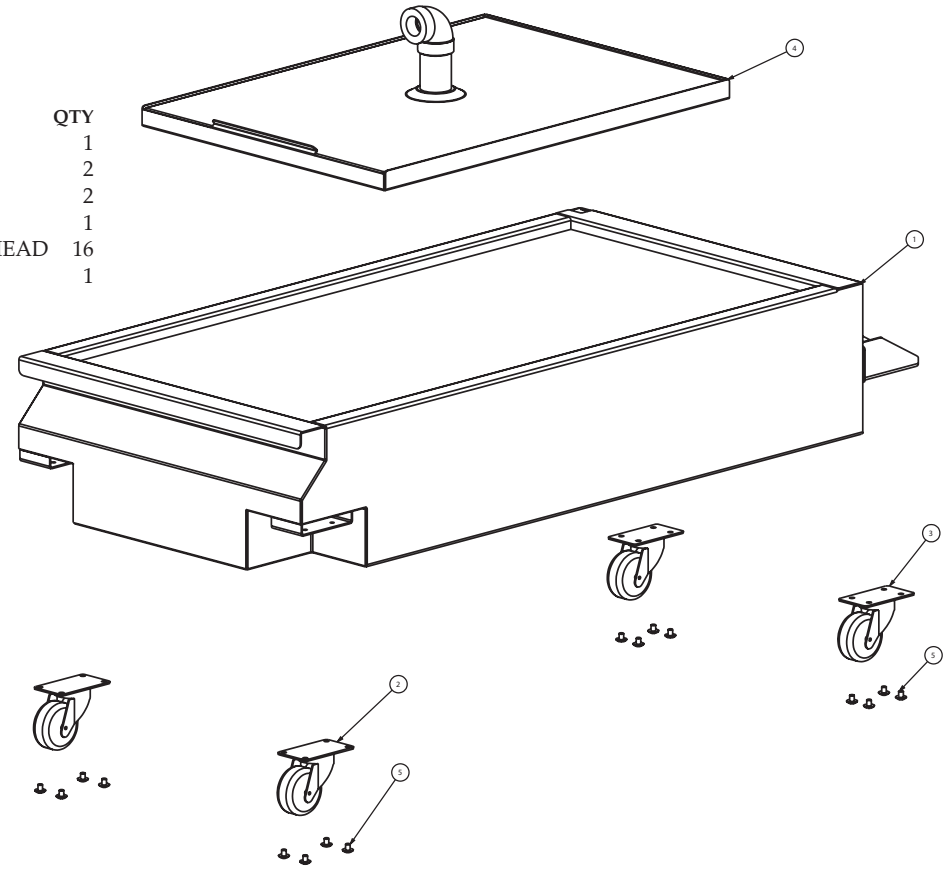

See details for these assemblies on following pages:

ITEM	PART NO	DESCRIPTION	QTY
1	5007556	ELECTRIC ASSY 120V, BASIC, LIFT	1
2a	5007581	KETTLE ASSY, BASIC CONTROL	1
2b	5008499	KETTLE ASSY, DELUXE CONTROL	1
3	5007811	DELUXE CONTROL PANEL ASSEMBLY	1
4	5007518	LIFT ASSEMBLY	1
5	5009150	DOOR	1
6	5007737	DRAIN PANEL AND SWITCHES	1
7	5008503	LOWER PANEL WITH DRAIN PIPE	1
8	5007792	VALVE-DRAIN ASSEMBLY	1
9	1008458	PANEL-BACK	1

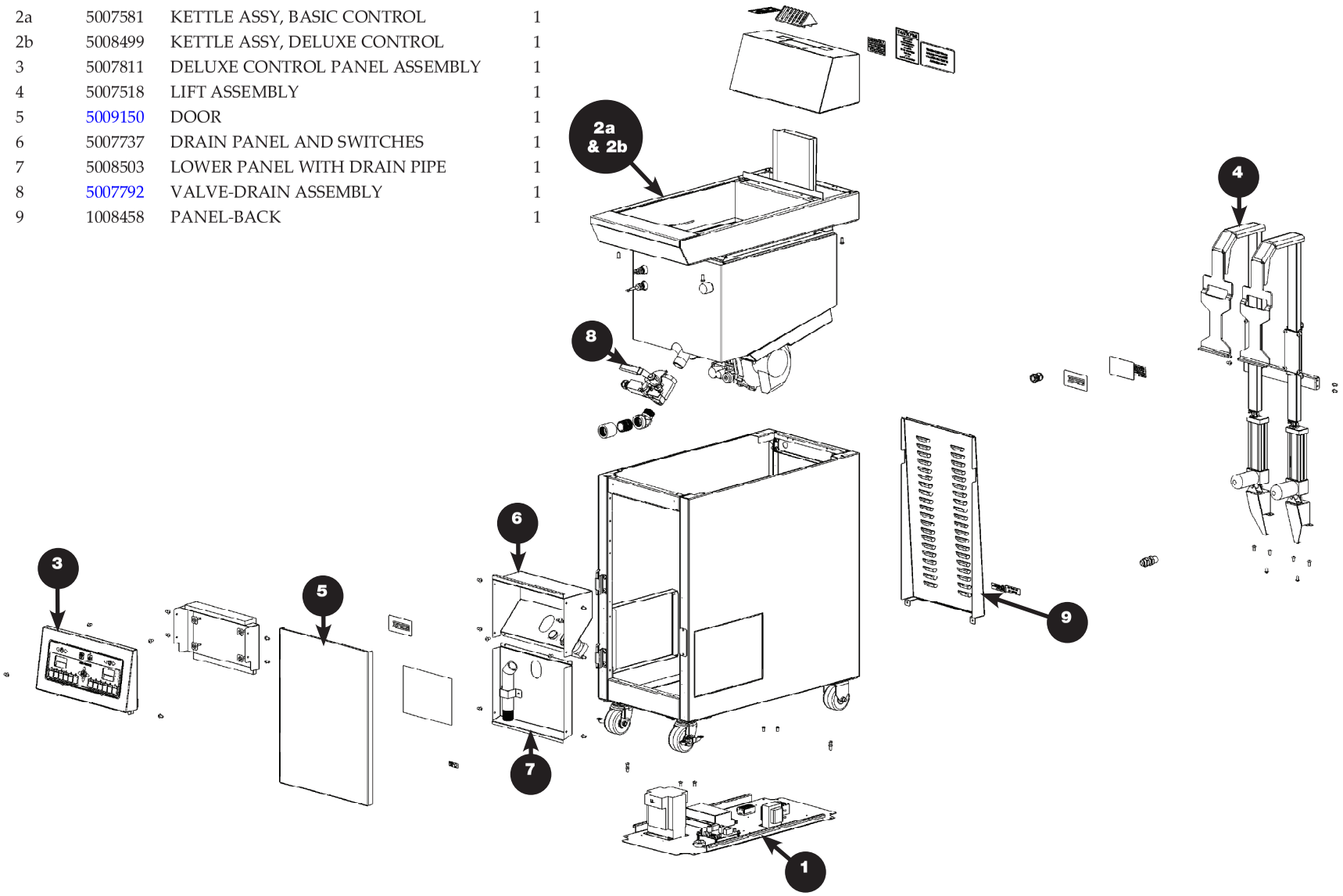

5007518 LIFT ASSEMBLY-ASF-60

ITEM	PART NO	DESCRIPTION	QTY
1	5010972	GUIDE COLUMN	2
2	1010888	GUIDE SUPPORT	2
3	RD-28118	ROD, LIFT, WELD	2
4	MO-27011	MOTOR, LIFT	2
5	1011221	GUIDE PEN	2
6	1008418	BRACKET, LIFT MOTOR MOUNT	2
7	PI-27539	PIN, 1/4" X 1 1/4", CLEVIS	4
8	PI-27540	PIN, COTTER	4
9	HL-28117	WLDMT-BASKET LIFT	2
10	SC-2661	SCREW, 10-32 X1/2,NF PHIL TRUSS M/S,18-8 SS	28
11	SC-23153	SCREW 5/16-18 X1/2 HEX TRIM HEAD	4

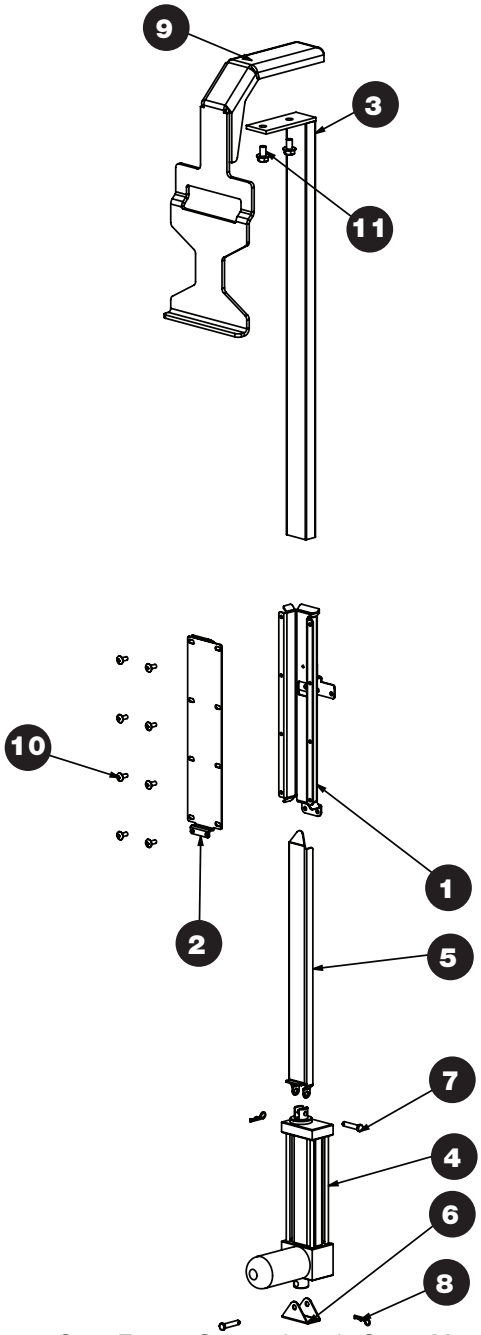

5008499 KETTLE ASSY, DELUXE CONTROL

ITEM	PART NO	DESCRIPTION	QTY
1	KE-27823	KETTLE	1
2	SA-27007	SEAL-SPARK PLUG	2
3	PI-27001	PIN-SPARK IGNITION	2
4	SA-27005	SEAL-SPARK PLUG	1
5	BN-34226	BURNER-HE GAS FRYER	1
6	SA-27006	SEAL-FAN BURNER	1
7	FA-34232	FAN	1
8	VA-27068	VALVE, VETURI	1
9	SA-27930	SEAL-GAS VALVE	1
10	VA-34260	VALVE, 24V	1
11	VA-27081	ELBOW, FLANGE, VENURI	1
12	OR-27249	O-RING, 0.812 O.D. X .94 DIA	1
13	FT-27476	FITTING, 1/2" M PIPE, 1/2" M FLARE	1
14	CP-28016	CAP-3/4 NPT	1
15	GL-27004	SEAL-GLASS SIG HT	1
16	GL-27002	GLASS BURNER INDICATOR	1
17	HL-27003	HOLDER- GLASS SIG HT	1
18	SC-2459	8-32 X 1/4" PHIL SCREW	2
19	NU-27820	NUT-HEX 6MM WITH STAR WASHER	16
20	NU-27851	NUT-HEX 5MM WITH STAR WASHER	4
21	1008588	BRACKET-CHIMNEY HOLDING	2
22	SC-2661	SCREW, 10-32 X 1/2, NF PHIL	2
23	5007645	FLUE	1
24	SC-27384	SCREW-# 10-16 SELF DRILLING	4
25	HO-28096	HOSE-1/2 ID X 24" GAS FLEXIBLE	1
26	VA-34531	VALVE-SAFETY 24VAC 1/2 NPT	1
27	NP-26220	NIPPLE-1/2"-14 NPT	1
28	FT-27250	FITTING - 1/4" COMPRESSION	1
29	FT-27251	FERRULE, COMPRESSION 6MM	1
30	5005200	WELDMENT, PROBE-REDUCER	1

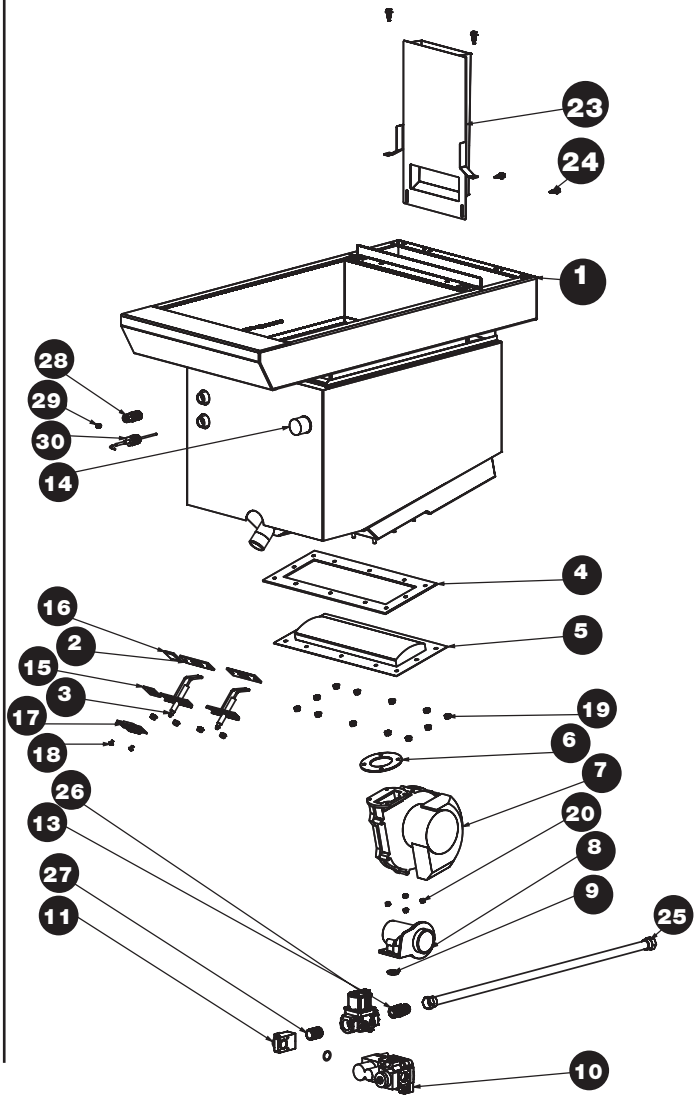

5009150 DOOR

ITEM	PART NO	DESCRIPTION	QTY
1	5007555	WLDMT-DOOR	1
2	1006303	MAGNET BRACKET	1
3	RI-2097	#42 STAINLESS RIVET	6
4	MA-25734	MAGENT, DOOR	1

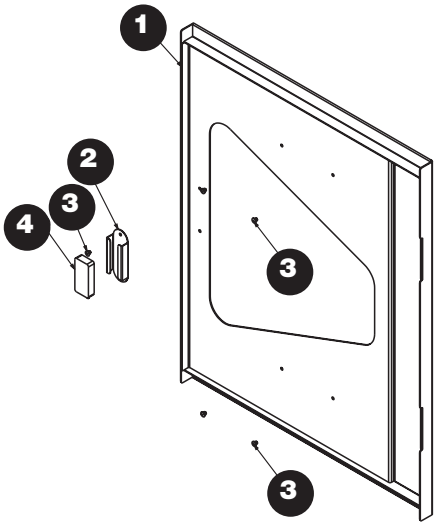

5007792 VALVE-DRAIN ASSEMBLY

ITEM	PART NO	DESCRIPTION	QTY
1	VA-28114	VALVE-BALL USE WITH FT-28113	1
2	5008497	WLDMT-DRAIN CAM	1
3	1008739	BRACKET, DRAIN SWITCH MOUNT	1
4	SW-34246	LIMIT SWITCH	1
5	SC -28288	SCREW-10-24 x .375 PHMS	2
6	BU-3964	BUSHING, STRAIG HT, STRAIN RELIEF	1
7	WS-23671	WASHER, LOCK, #10, 18-8 S/S	2
8	SC -2069	SCREW, 8-32 X 1, NC PHILLIPS PAN	2

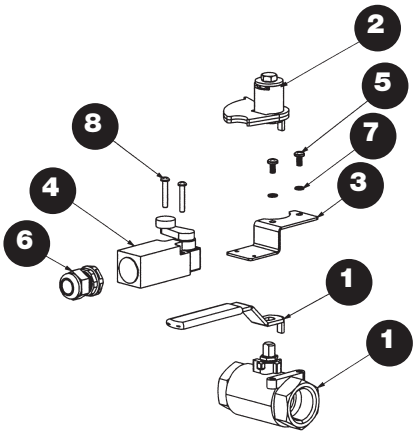

5007737 DRAIN PANEL & SWITCHES

ITEM	PART NO	DESCRIPTION	QTY
1	1009234	PANEL, FRONT LOWER	1
2	TT-34245	THERMOSTAT, HI-LIMIT	1
3	PA-27057	PLATE-LIGHT MOUNTING	1
4	LT-34281	LIGHT-ALARM	1
5	LT-34280	LIGHT-IGNITION ALARM	1
6	SW-34254	SWITCH, CAM, FOR SINGLE PHASE	1
7	PG-3344	1/2" HOLE PLUG	1
8	SC-22271	SCREWS,M4-0.7X6MM PHIL	2
9	SW-33495	SWITCH-PUSH BUTTON SPST	1

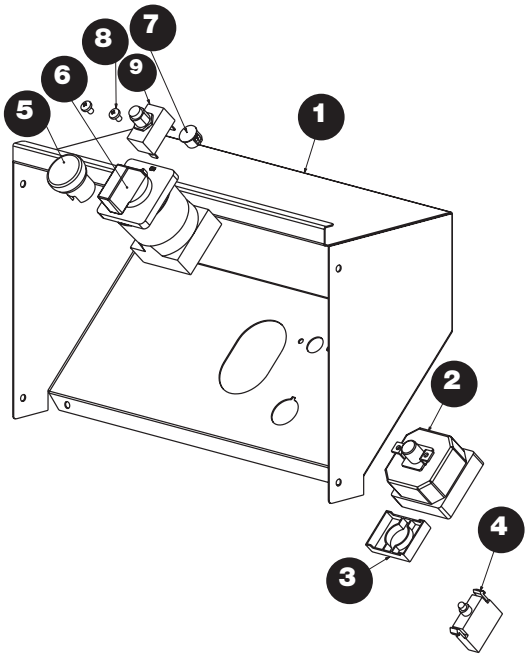

5008503 LOWER PANEL WITH DRAIN PIPE

ITEM	PART NO	DESCRIPTION	QTY
1	1009173	PANEL, LOWER	1
2	1009174	BRACKET-DRAIN HOLDER	1
3	RI-2097	#42 STAINLESS RIVET	2
4	PP-28126	PIPE – DRAIN	1

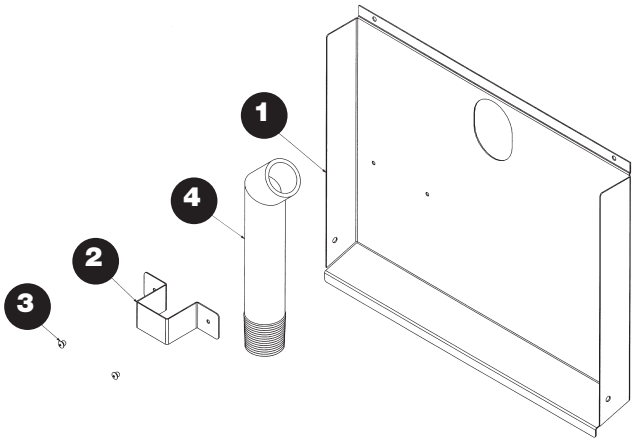

5007811 DELUXE CONTROL PANEL ASSEMBLY

ITEM	PART NO	DESCRIPTION	QTY
1	5007812	CONTROL PANEL	1
2	5007396	CIRCUIT BOARD	1
3	IN-22985	INSULATION, 1/2" CERAMIC WOOL	1
4	PE-28090	MAIN OVERLAY	1
5	WS-27045	WASHER, # 8, LOCK WASHER	6
6	NU-2296	NUT, HEX # 8-32	6
7	PE-28110	INSERT-MENU CARD	2

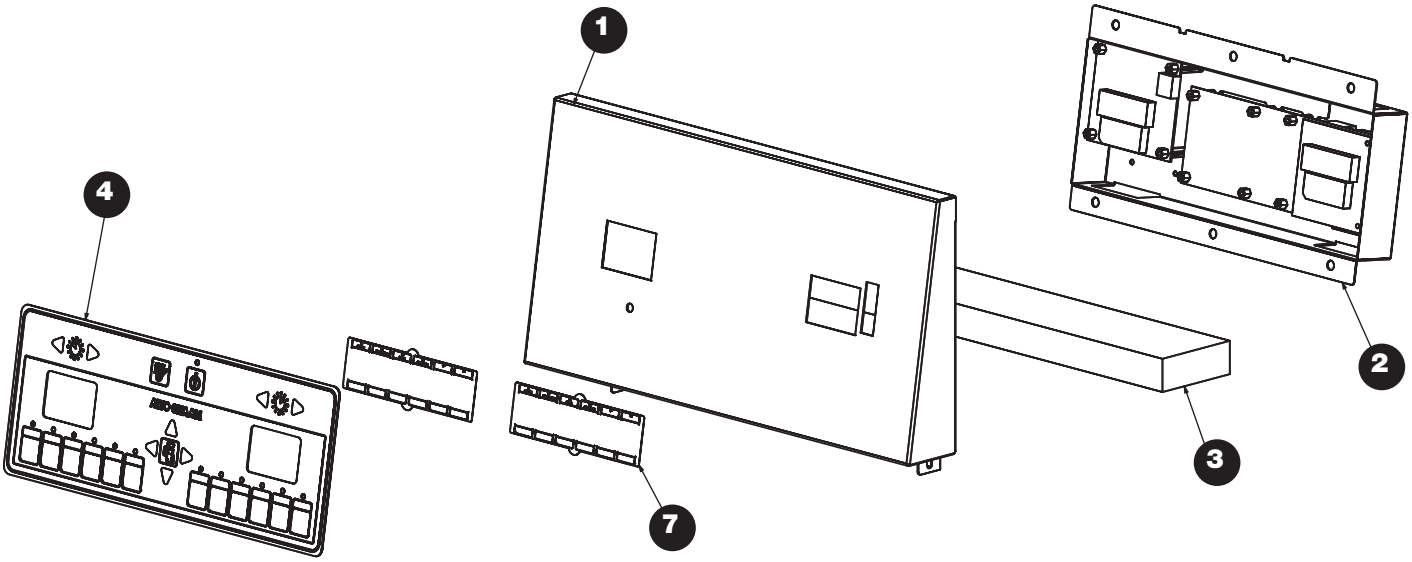

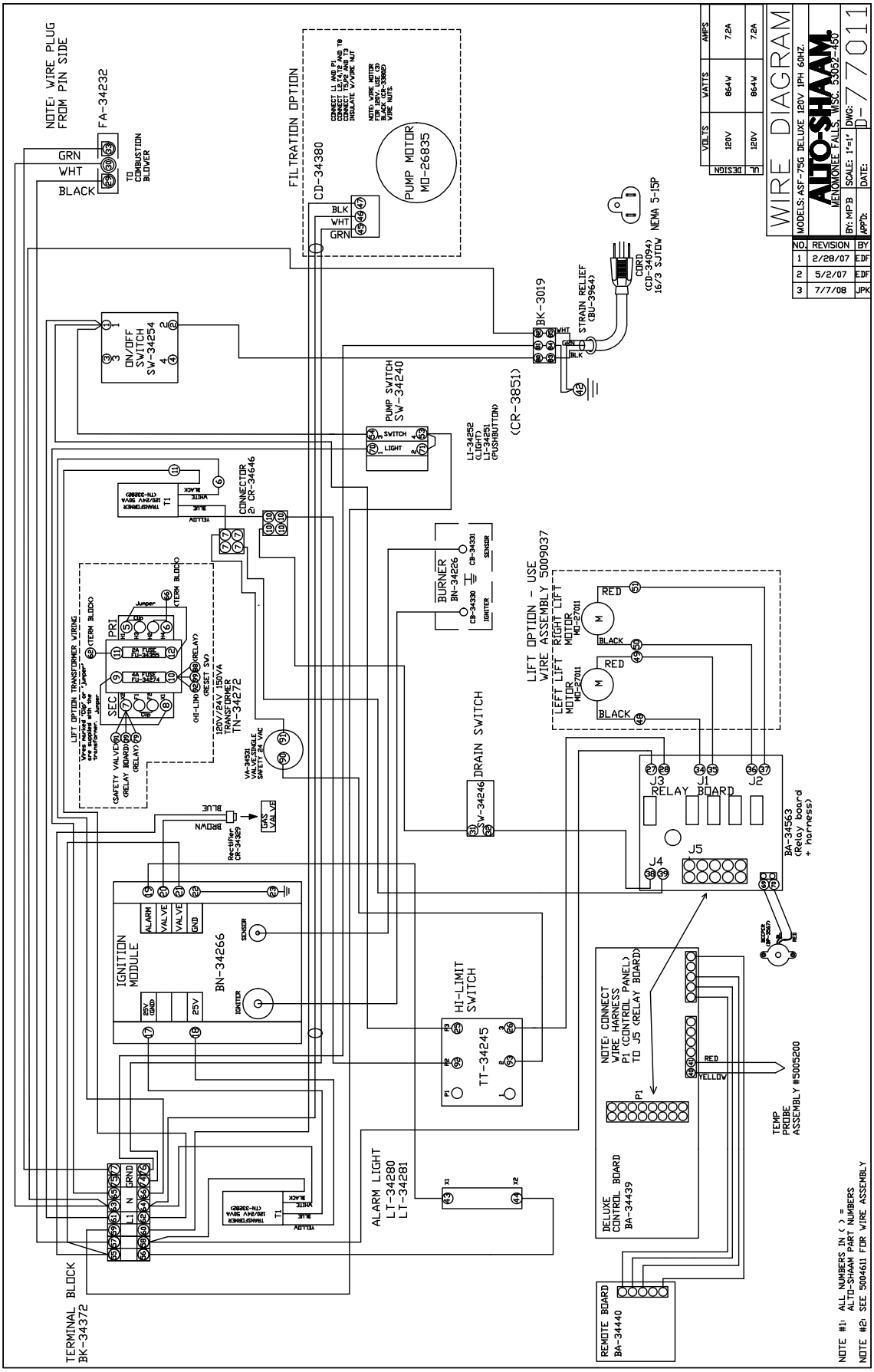
WIRE DIAGRAM
MODELS: ASF-75G DELUXE 120V 1PH 60HZ.
ALTO-SHAAM
MENOMONEE FALLS, WISC. 53052-450
BY: MPB
SCALE: 1"=1"
DWG: D-77011
APP'D:
DATE:
NO. REVISION BY
1 2/28/07 EDF
2 5/2/07 EDF
3 7/7/08 JPK
VOLTS WATTS AMPS
120V 864W 7.2A
120V 864W 7.2A
UL DESIGN
NOTE: WIRE PLUG FROM PIN SIDE
FA-34232
GRN
WHT
BLACK
TO COMBUSTION BLOWER
FILTRATION OPTION
CD-34380
BLK
WHT
GRN
PUMP MOTOR MO-26835
NEMA 5-15P
CORD (CD-34094) 16/3 SJTOW
STRAIN RELIEF (BU-3964)
BK-3019
ON/OFF SWITCH SW-34254
PUMP SWITCH SW-34240
SWITCH
LIGHT
LI-34252 (LIGHT) LI-34251 (PUSHBUTTON)
(CR-3851)
CONNECTOR 2: CR-34646
TRANSFORMER 120/24V 50VA (TN-33282)
T1
YELLOW
BLUE
BLACK
LIFT OPTION TRANSFORMER WIRING
PRI
SEC
2A FUSE FU-34355
4A FUSE FU-34274
(TERM BLOCK)
(RELAY)
(RESET SW)
(HI-LIM)
(SAFETY VALVE)
(RELAY BOARD)
120V/24V 150VA TRANSFORMER TN-34272
VA-34531 VALVE,SINGLE SAFETY 24 VAC
BURNER BN-34226
CB-34330
CB-34331
IGNITER
SENSOR
LIFT OPTION - USE WIRE ASSEMBLY 5009037
LEFT LIFT MOTOR MO-27011
RIGHT LIFT MOTOR MO-27011
RED
BLACK
DRAIN SWITCH
SW-34246
J3 J1 J2
RELAY BOARD
J4 J5
BA-34563 (Relay board + harness)
BROWN
BLUE
GAS VALVE
Rectifier CR-34329
IGNITION MODULE
BN-34266
ALARM
VALVE
VALVE
GND
25V (GND)
25V
HI-LIMIT SWITCH
TT-34245
NOTE: CONNECT WIRE HARNESS P1 (CONTROL PANEL) TO J5 (RELAY BOARD)
P1
RED
YELLOW
TEMP PROBE ASSEMBLY #5005200
DELUXE CONTROL BOARD BA-34439
ALARM LIGHT LT-34280 LT-34281
TERMINAL BLOCK BK-34372
REMOTE BOARD BA-34440
NOTE #1: ALL NUMBERS IN ( ) = ALTO-SHAAM PART NUMBERS
NOTE #2: SEE 5004611 FOR WIRE ASSEMBLY

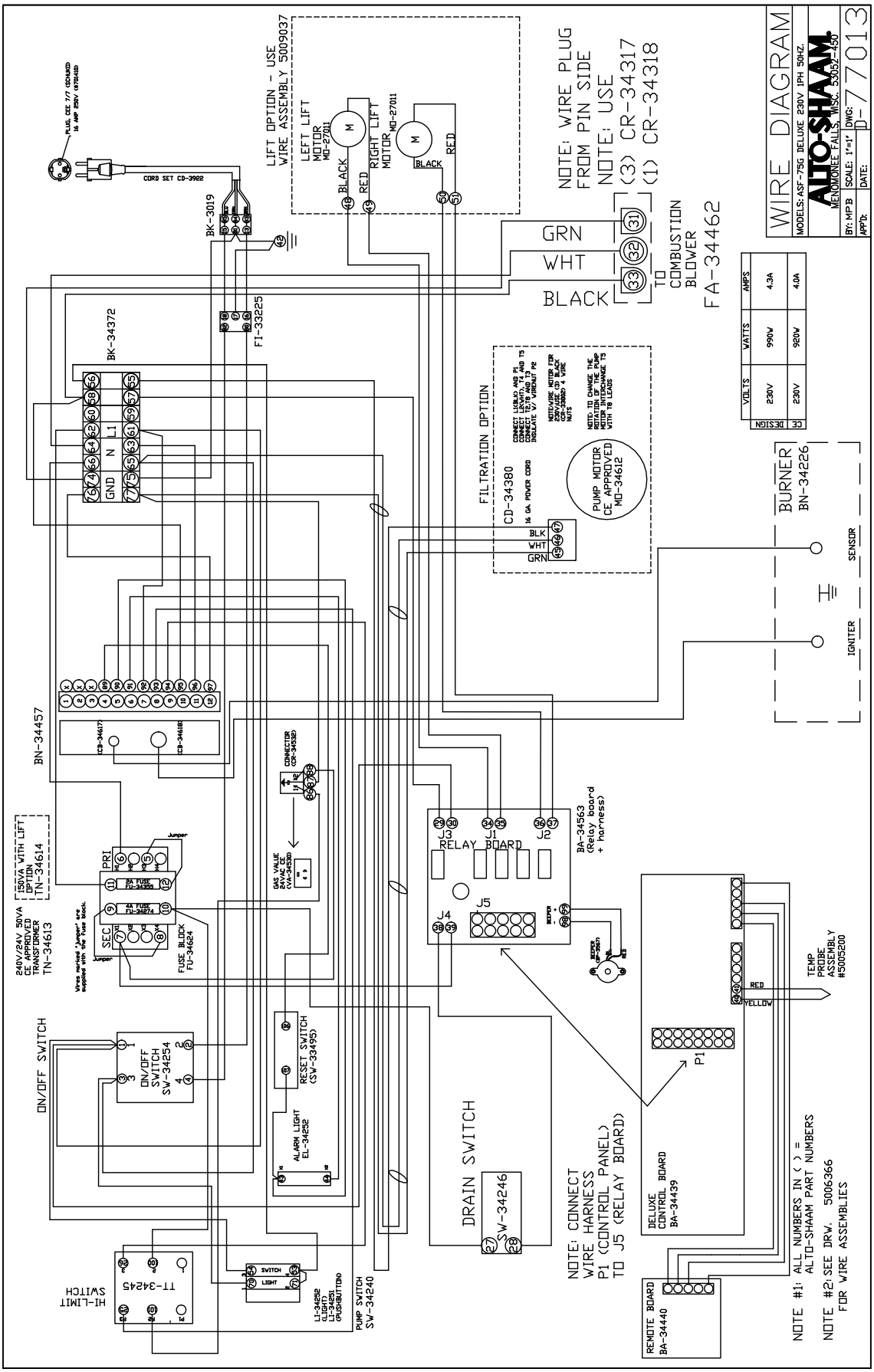
WIRE DIAGRAM
ALTO-SHAAM
MENOMONEE FALLS, WISC. 53052-450
MODELS: ASF-75G DELUXE 230V 1PH 50HZ.
BY: MPB
SCALE: 1"=1"
DWG: D-77013
APP'D:
DATE:
LIFT OPTION - USE WIRE ASSEMBLY 5009037
LEFT LIFT MOTOR MD-27011
RIGHT LIFT MOTOR MD-27011
NOTE: WIRE PLUG FROM PIN SIDE
NOTE: USE
(3) CR-34317
(1) CR-34318
GRN
WHT
BLACK
TO COMBUSTION BLOWER FA-34462
CORD SET CD-3922
BK-3019
BK-34372
FI-33225
FILTRATION OPTION
CD-34380
PUMP MOTOR CE APPROVED MD-34612
BURNER BN-34226
SENSOR
IGNITER
BN-34457
240V/24V 50VA CE APPROVED TRANSFORMER TN-34613
150VA WITH LIFT OPTION TN-34614
FUSE BLOCK FU-34624
ON/OFF SWITCH
ON/OFF SWITCH SW-34254
RESET SWITCH (SW-33495)
ALARM LIGHT EL-34252
RELAY BOARD
BA-34563 (Relay board + harness)
DRAIN SWITCH
SW-34246
HI-LIMIT SWITCH
TT-34245
PUMP SWITCH SW-34240
TEMP PROBE ASSEMBLY #5003200
DELUXE CONTROL BOARD BA-34439
REMOTE BOARD BA-34440
NOTE: CONNECT WIRE HARNESS P1 (CONTROL PANEL) TO J5 (RELAY BOARD)
NOTE #1: ALL NUMBERS IN ( ) = ALTO-SHAAM PART NUMBERS
NOTE #2: SEE DRW. 5006366 FOR WIRE ASSEMBLIES

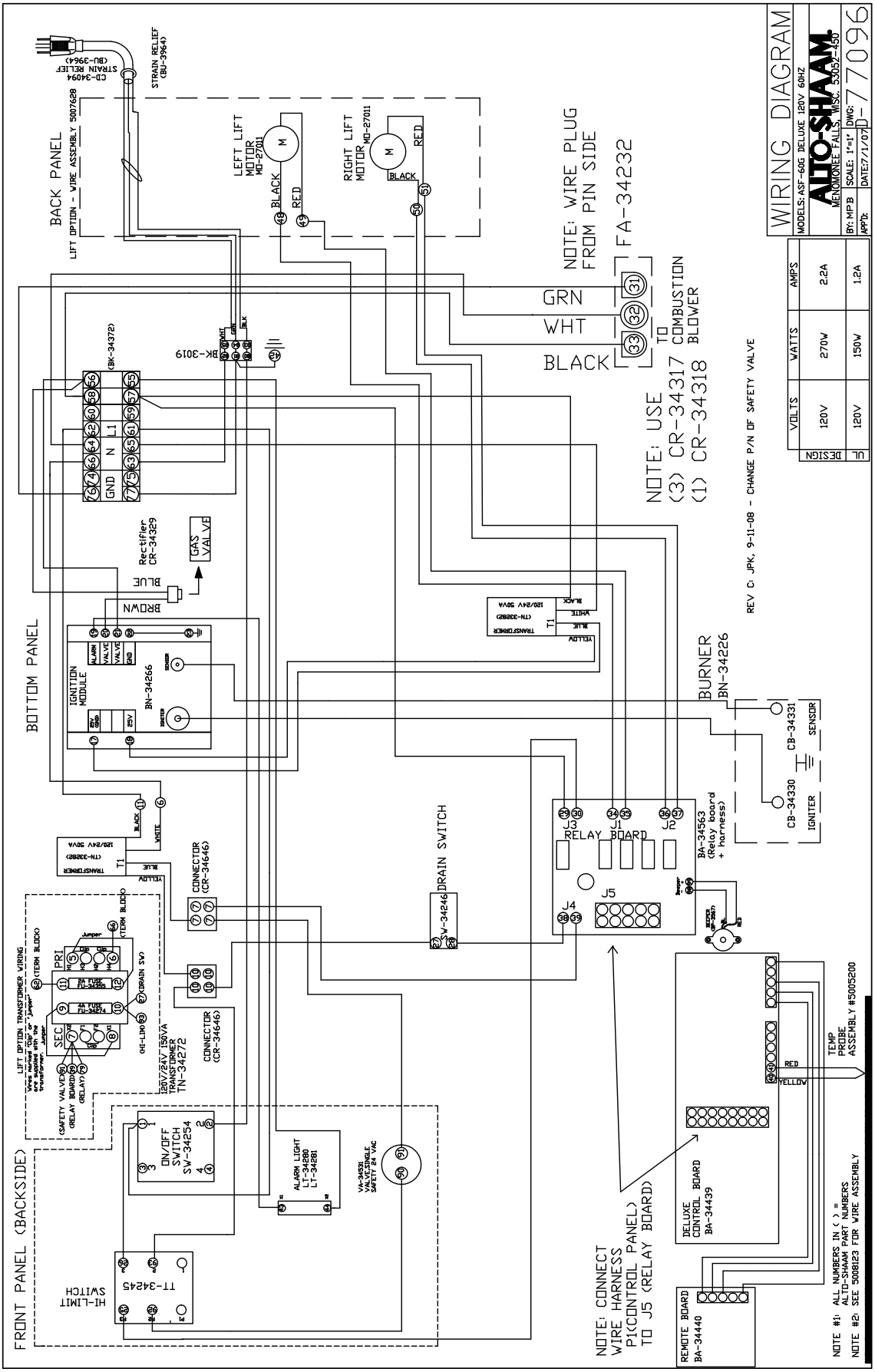

DESIGN	VOLTS	WATTS	AMPS
UL	120V	270W	2.2A
	120V	150W	1.2A

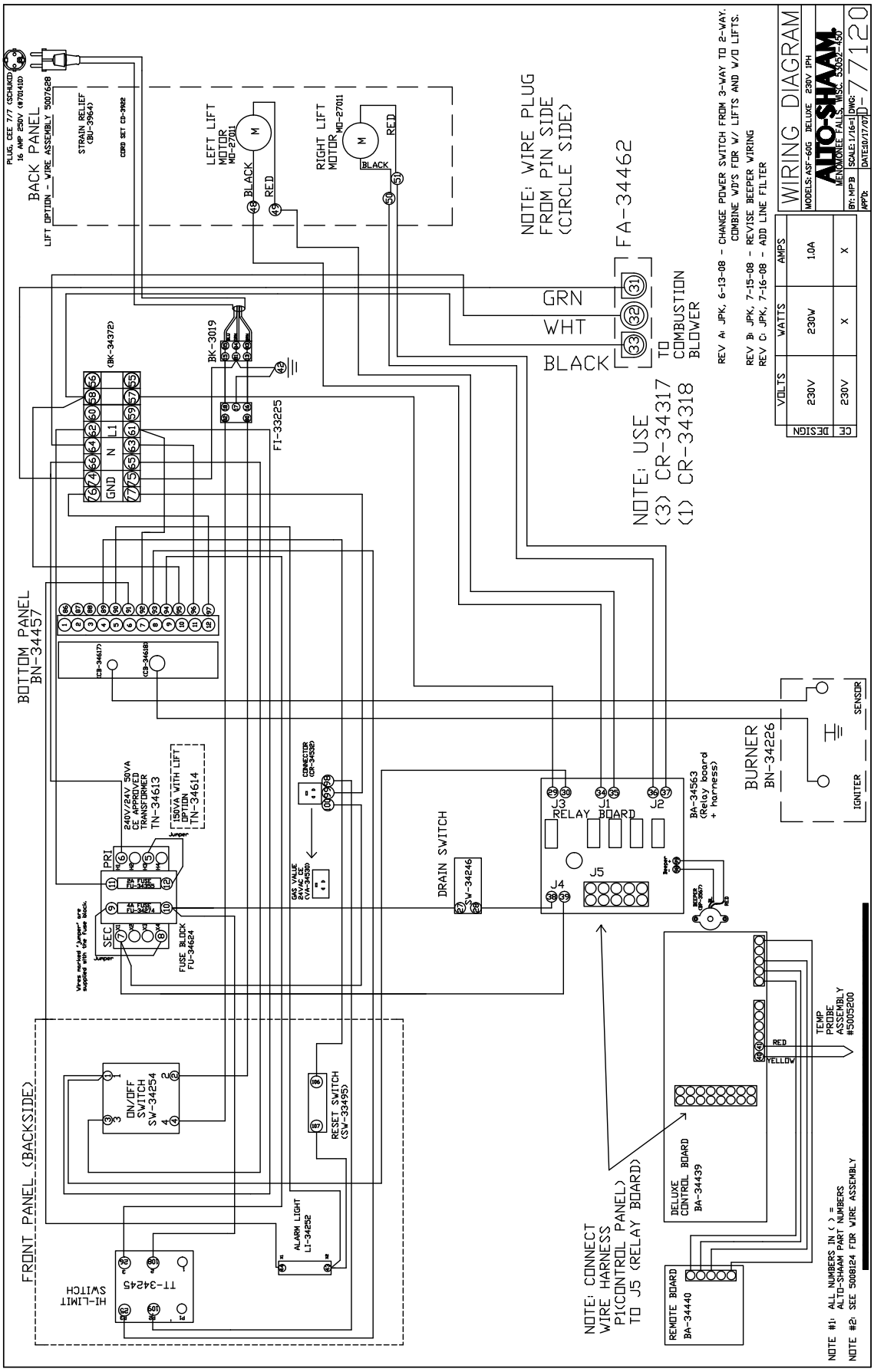
WIRING DIAGRAM
MODELS: ASF-60G DELUXE 230V 1PH
ALTO-SHAAM
MENOMONEE FALLS, WISC. 53052-450
BY: MPB
SCALE: 1/16=1
DWG: D-77120
APP'D:
DATE: 10/17/07
REV A: JPK, 6-13-08 - CHANGE POWER SWITCH FROM 3-WAY TO 2-WAY. COMBINE WD'S FOR W/ LIFTS AND W/O LIFTS.
REV B: JPK, 7-15-08 - REVISE BEEPER WIRING
REV C: JPK, 7-16-08 - ADD LINE FILTER
VOLTS
WATTS
AMPS
DESIGN
CE
230V
230W
1.0A
230V
X
X
BACK PANEL
LIFT OPTION - WIRE ASSEMBLY 5007628
PLUG, CEE 7/7 (SCHUKO) 16 AMP 250V (#701410)
STRAIN RELIEF (BU-3964)
CORD SET CD-3922
LEFT LIFT MOTOR MO-27011
RIGHT LIFT MOTOR MO-27011
BLACK
RED
NOTE: WIRE PLUG FROM PIN SIDE (CIRCLE SIDE)
FA-34462
GRN
WHT
BLACK
TO COMBUSTION BLOWER
NOTE: USE (3) CR-34317 (1) CR-34318
BK-3019
FI-33225
(BK-34372)
GND
N
L1
BOTTOM PANEL BN-34457
(CB-34617)
(CB-34618)
240V/24V 50VA CE APPROVED TRANSFORMER TN-34613
150VA WITH LIFT OPTION TN-34614
PRI
SEC
2A FUSE FU-34355
4A FUSE FU-34274
FUSE BLOCK FU-34624
Jumper
Wires marked "jumper" are supplied with the fuse block.
CONNECTOR (CR-34532)
GAS VALUE 24VAC CE (VA-34530)
DRAIN SWITCH
SW-34246
J3
J1
J2
RELAY BOARD
J4
J5
BA-34563 (Relay board + harness)
BURNER BN-34226
SENSOR
IGNITER
FRONT PANEL (BACKSIDE)
ON/OFF SWITCH SW-34254
RESET SWITCH (SW-33495)
ALARM LIGHT LI-34252
HI-LIMIT SWITCH
TT-34245
NOTE: CONNECT WIRE HARNESS P1(CONTROL PANEL) TO J5 (RELAY BOARD)
DELUXE CONTROL BOARD BA-34439
REMOTE BOARD BA-34440
TEMP PROBE ASSEMBLY #5005200
RED
YELLOW
NOTE #1: ALL NUMBERS IN ( ) = ALTO-SHAAM PART NUMBERS
NOTE #2: SEE 5008124 FOR WIRE ASSEMBLY

TRANSPORTATION DAMAGE and CLAIMS

All Alto-Shaam equipment is sold F.O.B. shipping point, and when accepted by the carrier, such shipments become the property of the consignee.

Should damage occur in shipment, it is a matter between the carrier and the consignee. In such cases, the carrier is assumed to be responsible for the safe delivery of the merchandise, unless negligence can be established on the part of the shipper.

1. Make an immediate inspection while the equipment is still in the truck or immediately after it is moved to the receiving area. Do not wait until after the material is moved to a storage area.
2. Do not sign a delivery receipt or a freight bill until you have made a proper count and inspection of all merchandise received.
3. Note all damage to packages directly on the carrier's delivery receipt.
4. Make certain the driver signs this receipt. If he refuses to sign, make a notation of this refusal on the receipt.
5. If the driver refuses to allow inspection, write the following on the delivery receipt: *Driver refuses to allow inspection of containers for visible damage.*
6. Telephone the carrier's office immediately upon finding damage, and request an inspection. Mail a written confirmation of the time, date, and the person called.
7. Save any packages and packing material for further inspection by the carrier.
8. Promptly file a written claim with the carrier and attach copies of all supporting paperwork.

We will continue our policy of assisting our customers in collecting claims which have been properly filed and actively pursued. We cannot, however, file any damage claims for you, assume the responsibility of any claims, or accept deductions in payment for such claims.

LIMITED WARRANTY

Alto-Shaam, Inc. warrants to the original purchaser only that any original part that is found to be defective in material or workmanship will, at Alto-Shaam's option, subject to provisions hereinafter stated, be replaced with a new or rebuilt part.

The parts warranty period is as follows:

For the refrigeration compressor on Alto-Shaam Quickchillers™, five (5) years from the date of installation.

For the heating element on Halo Heat® cook/hold ovens, as long as the original purchaser owns the oven.

For all other parts, one (1) year from the date of installation or fifteen (15) months from the shipping date, whichever occurs first.

The labor warranty period is one (1) year from the date of installation or fifteen (15) months from the shipping date, whichever occurs first.

Alto-Shaam will bear normal labor charges performed during standard business hours, excluding overtime, holiday rates or any additional fees.

To be valid, a warranty claim must be asserted during the applicable warranty period. This warranty is not transferable.

THIS WARRANTY DOES NOT APPLY TO:

1. Calibration.
2. Replacement of light bulbs, door gaskets, and/or the replacement of glass due to damage of any kind.
3. Equipment damage caused by accident, shipping, improper installation or alteration.
4. Equipment used under conditions of abuse, misuse, carelessness or abnormal conditions, including but not limited to, equipment subjected to harsh or inappropriate chemicals, including but not limited to, compounds containing chloride or quaternary salts, poor water quality, or equipment with missing or altered serial numbers.
5. Damage incurred as a direct result of poor water quality, inadequate maintenance of steam generators and/or surfaces affected by water quality. Water quality and required maintenance of steam generating equipment is the responsibility of the owner/operator.
6. Damage caused by use of any cleaning agent other than Alto-Shaam's Combitherm® Cleaner, including but not limited to damage due to chlorine or other harmful chemicals. **Use of Alto-Shaam's Combitherm® Cleaner on Combitherm® ovens is highly recommended.**
7. Any losses or damage resulting from malfunction, including loss of product or consequential or incidental damages of any kind.
8. Equipment modified in any manner from original model, substitution of parts other than factory authorized parts, removal of any parts including legs, or addition of any parts.

This warranty is exclusive and is in lieu of all other warranties, express or implied, including the implied warranties of merchantability and fitness for a particular purpose. In no event shall Alto-Shaam be liable for loss of use, loss of revenue or profit, or loss of product, or for any indirect, special, incidental, or consequential damages. No person except an officer of Alto-Shaam, Inc. is authorized to modify this warranty or to incur on behalf of Alto-Shaam any other obligation or liability in connection with Alto-Shaam equipment.

Effective 09/10

ALTO-SHAAM®

RECORD THE MODEL AND SERIAL NUMBER OF THE APPLIANCE FOR EASY REFERENCE.
ALWAYS REFER TO BOTH MODEL AND SERIAL NUMBER IN ANY CONTACT WITH ALTO-SHAAM REGARDING THIS APPLIANCE.

Model: _____ Date Installed: _____
Voltage: _____ Purchased From: _____
Serial Number: _____ _____

W164 N9221 Water Street • P.O. Box 450 • Menomonee Falls, Wisconsin 53052-0450 • U.S.A.
PHONE: 262.251.3800 • 800.558-8744 USA/CANADA FAX: 262.251.7067 • 800.329.8744 U.S.A. ONLY
www.alto-shaam.com

PRINTED IN U.S.A.