This Manual covers High Speed Combination Xpress Ovens equipped with 7 Inch Touch Screen Display.

Service

High Speed Combination Oven

AXP22*/MXP22*
7 In. Display Models

60hz Service Manual



This manual is to be used by qualified service technicians only. ACP, Inc. does not assume any responsibility for property damage or personal injury for improper service procedures done by an unqualified person.

ACP INC.
Accelerated Cooking Products

16400040
Rev.1
August 2019

TABLE OF CONTENTS

IMPORTANT SAFETY INFORMATION.....1-4
Specifications.....5
Installation.....6
Quick Start Reference Guide.....7-12
Firmware Update Procedure.....13
Care and Cleaning.....14
Oven Construction.....15-18
Antenna Motor Assembly & Radiant Element.....19
Stirrer Cover & Waveguide Kits 20
Teflon Liner Instructions.....21
Component Testing Procedures.....22-23
Interlock Switch Service.....24
Service Test Mode.....25-28
Error Code List.....29
Microwave Power Test.....30
Wiring Diagram/Schematic.....31-34

ACP INC.
Accelerated Cooking Products

http://services.acpsolutions.com

SERVICE & SUPPORT

Find parts and information for your oven

IMPORTANT SAFETY INSTRUCTIONS

Important Notices for Servicers and Consumers

ACP will not be responsible for personal injury or property damage from improper service procedures. Pride and workmanship go into every product to provide our customers with quality products. It is possible, however, that during its lifetime a product may require service. Products should be serviced only by a qualified service technician who is familiar with the safety procedures required in the repair and who is equipped with the proper tools, parts, testing instruments and the appropriate service information. **IT IS THE TECHNICIANS RESPONSIBLITY TO REVIEW ALL APPROPRIATE SERVICE INFORMATION BEFORE BEGINNING REPAIRS.**

⚠ WARNING

To avoid risk of severe personal injury or death, disconnect power before working/servicing on appliance to avoid electrical shock.

ComServ Support Center

ComServ Commercial Service

Web Site
WWW.ACPSOLUTIONS.COM

Telephone Number
1-866-426-2621 option 1 or 319-368-8195

E-Mail: commercialservice@acpsolutions.com

Recognize Safety Symbols, Words, and Labels

⚠ DANGER

DANGER— Immediate hazards which **WILL** result in severe personal injury or death.

⚠ WARNING

WARNING— Hazards or unsafe practices which **COULD** result in severe personal injury or death.

⚠ CAUTION

CAUTION— Hazards or unsafe practices which **COULD** result in minor personal injury, product or property damage.

⚠ WARNING

Read the following information to avoid possible exposure to microwave radiation:

The basic design of the Microwave Oven makes it an inherently safe device to both use and service. However, there are some precautions which should be followed when servicing the microwave to maintain this safety. These are as follows:

1. Always operate the unit from an adequately grounded outlet. Do not operate on a two-wire extension cord.

2. Before servicing the unit (if unit is operable) perform the microwave leakage test.

3. The oven should never be operated if the door does not fit properly against the seal, the hinges or hinge bearings are damaged or broken; the choke is damaged, (pieces missing, etc.); or any other visible damage can be noted. Check the choke area to ensure that this area is clean and free of all foreign matter.

4. If the oven operates with the door open and produces microwave energy, take the following steps:
   A. Tell the user not to operate the oven.
   B. Contact ACP ComServ immediately.

5. Always have the oven disconnected when the outer case is removed except when making the "live" tests called for in the Service Manual. Do not reach into the equipment area while the unit is energized. Make all connections for the test and check them for tightness before plugging the cord into the outlet.

6. Always ground the capacitors on the magnetron filter box with an insulated-handle screwdriver before working in the high voltage area of the equipment compartment. Some types of failures will leave a charge in these capacitors and the discharge could cause a reflex action which could make you injure yourself.

7. Always remember that in the area of the transformer there is HIGH VOLTAGE. When the unit is operating keep this area clear and free of anything which could possibly cause an arc or ground, etc.

8. Do not for any reason defeat the interlock switches there is not valid reason for this action at any time; nor will it be condoned by ACP.

9. IMPORTANT: Before returning a unit to a customer, be sure to check for proper switch interlock action.

10. The Microwave Oven should never be operated with any components removed and/or bypassed or when any of the safety interlocks are found to be defective, or when any of the seal surfaces are defective, missing, or damaged.

11. All microwave ovens meet all requirements of the radiation control for Health and Safety Act of 1968. Due to measurement uncertainties, the maximum leakage for the field will be 4mw/cm^2.

12. To ensure that the unit does not emit excessive microwave leakage and to meet the Department of Health and Human Services guidelines, check the oven for microwave leakage using a microwave oven leakage meter that complies with US Government CDRH / FDA / DHHS requirements and or any other local government requirements. The maximum leakage level allowed by ACP is 4mw/cm^2.

13. If servicer encounters an emission reading over 4mw/cm^2, the servicer is to cease repair and contact the ACP ComServ Department immediately for further direction. ACP will contact the proper Government Agency upon verification of the test results.

Recognize this symbol as a SAFETY message

WARNING

When using electrical equipment, basic safety precautions should be followed to reduce the risk of burns, electrical shock, fire, or injury to persons including the following.

1. READ all instructions before using equipment.
2. READ AND FOLLOW the specific "PRECAUTIONS TO AVOID POSSIBLE EXPOSURE TO EXCESSIVE MICROWAVE ENERGY" on this page.
3. This equipment MUST BE GROUNDED. Connect only to properly GROUNDED outlet. See "GROUNDING / EARTHING INSTRUCTIONS" on page 5.
4. Install or locate this equipment ONLY in accordance with the installation instructions in this manual.
5. Some products such as whole eggs and sealed containers—for example, closed glass jars—are able to explode and SHOULD NOT be HEATED in this oven.
6. Use this equipment ONLY for its intended use as described in this manual. Do not use corrosive chemicals or vapors in this equipment. This type of oven is specifically designed to heat, cook, or dry food. It is not designed for industrial or laboratory use.
7. As with any equipment, CLOSE SUPERVISION is necessary when used by CHILDREN.
8. See door cleaning instructions.
9. DO NOT heat baby bottles in oven.
10. Baby food jars shall be open when heated and contents stirred or shaken before consumption, in order to avoid burns.
11 DO NOT operate this equipment if it has a damaged cord or plug, if it is not working properly, or if it has been damaged or dropped.
12. This equipment, including power cord, must be serviced ONLY by qualified service personnel. Special tools are required to service equipment. Contact nearest authorized service facility for examination, repair, or adjustment.
13. DO NOT cover or block louvers or other openings on equipment.
14. DO NOT store this equipment outdoors. DO NOT use this product near water – for example, near a kitchen sink, in a wet basement, a swimming pool, or a similar location.
15. DO NOT immerse cord or plug in water.
16. Keep cord AWAY from HEATED surfaces.
17. DO NOT let cord hang over edge of table or counter.
18. For commercial use only.

SAVE THESE INSTRUCTIONS

⚠ WARNING

To avoid risk of fire in the oven cavity:

a. DO NOT overcook food. Carefully attend oven when paper, plastic, or other combustible materials are placed inside the oven to facilitate cooking.

b. Remove wire twist-ties from paper or plastic bags before placing bag in oven.

c. If materials inside the oven ignite, keep oven door CLOSED, turn oven off and disconnect the power cord, or shut off power at the fuse or circuit breaker panel.

d. DO NOT use the cavity for storage. DO NOT leave paper products, cooking utensils, or food in the cavity when not in use.

⚠ WARNING

Liquids such as water, coffee, or tea are able to be overheated beyond the boiling point without appearing to be boiling due to surface tension of the liquid. Visible bubbling or boiling when the container is removed from the microwave oven is not always present. THIS COULD RESULT IN VERY HOT LIQUIDS SUDDENLY BOILING OVER WHEN A SPOON OR OTHER UTENSIL IS INSERTED INTO THE LIQUID. To reduce the risk of injury to persons:

i) Do not overheat the liquid.
ii) Stir the liquid both before and halfway through heating it.
iii) Do not use straight-sided containers with narrow necks.
iv) After heating, allow the container to stand in the microwave oven for a short time before removing the container.
v) Use extreme care when inserting a spoon or other utensil into the container.

⚠ CAUTION

To avoid personal injury or property damage, observe the following:

1. Do not deep fat fry in oven. Fat could overheat and be hazardous to handle.
2. Do not cook or reheat eggs in shell or with an unbroken yolk using microwave energy. Pressure may build up and erupt. Pierce yolk with fork or knife before cooking.
3. Pierce skin of potatoes, tomatoes, and similar foods before cooking with microwave energy. When skin is pierced, steam escapes evenly.
4. Do not operate equipment without load or food in oven cavity.
5. Microwave popcorn should not be popped in oven.
6. Do not use regular cooking thermometers in oven. Most cooking thermometers contain mercury and may cause an electrical arc, malfunction, or damage to oven.
7. Do not use metal utensils in oven.
8. Do not use aluminum foil in oven
9. Never use paper, plastic, or other combustible materials that are not intended for cooking.
10. When cooking with paper, plastic, or other combustible materials, follow manufacturer's recommendations on product use.
11. Do not use paper towels which contain nylon or other synthetic fibers. Heated synthetics could melt and cause paper to ignite.
12. Do not heat sealed containers or plastic bags in oven. Food or liquid could expand quickly and cause container or bag to break. Pierce or open container or bag before heating.
13. To avoid pacemaker malfunction, consult physician or pacemaker manufacturer about effects of microwave energy on pacemaker.
14. An authorized servicer MUST inspect equipment annually. Record all inspections and repairs for future use.

SAVE THESE INSTRUCTIONS

SPECIFICATIONS

Power Source Voltage AC	208/230 VAC
Amperage (Single Unit)	30 A
Frequency	60 Hz
Single Phase, 3 wire grounded	YES
Receptacle	6-30R
Plug	6-30P
Power Output – Microwave (IEC705)	2200 Watts
Minimum Temperature Rise (ΔT)	22°F / 12°C
Operating Frequency	2450 MHz
Power Consumption	5700 Watts
Microwave only	4200 Watts
Convection fan	425 Watts / 6200 RPM
Radiant heater	3000 Watts
Convection heater	2000 Watts
Combination	5300 Watts
Dimensions Cabinet (in / cm)	
Width	25.0” 63.5cm
Height	20 .25” 51cm
Depth (includes bracket on back)	25.625” 65cm
Oven Interior (in / cm) – useable space	
Width	16.0” 41cm
Height	7.75” 20 cm
Depth	15.0” 38 cm
Weight (lbs. / kg)	
Uncrated	150 lbs 68kg
Crated	175 lbs 79kg

INSTALLATION

Grounding/Earthing Instructions



Oven MUST be grounded. Grounding reduces risk of electric shock by providing an escape wire for the electric current if an electrical short occurs. This oven is equipped with a cord having a grounding wire with a grounding plug. The plug must be plugged into an outlet that is properly installed and grounded.

⚠ WARNING

To avoid risk of electrical shock or death, this oven must be grounded and plug must not be altered.

Consult a qualified electrician or servicer if grounding instructions are not completely understood, or if doubt exists as to whether the oven is properly grounded.

Do not use an extension cord.
If the product power cord is too short, have a qualified electrician install a three-slot receptacle. This oven should be plugged into a separate circuit with the electrical rating as provided in product specifications. When the combination oven is on a circuit with other equipment, an increase in cooking times may be required and fuses can be blown.

External Equipotential Earthing Terminal *(export only)*

Equipment has secondary earthing terminal. Terminal provides external earthing connection used in addition to earthing prong on plug. Located on outside of oven back, terminal is marked with symbol shown at right



Installation

⚠ WARNING

Excessive Weight Hazard
Use two or more people to move and install oven.
Failure to do so can result in back or other injury

STEP 1 - Unpack Oven

- Inspect oven for damage such as dents in door or inside oven cavity.
- Report any dents or breakage to source of purchase immediately. **Do not attempt to use oven if damaged.**
- Remove all packing materials from oven interior.
- If oven has been stored in extremely cold area, wait a few hours before connecting power.
- If you plan to program via Ethernet, remove plastic plug from port on the right rear of oven. Gently use pliers if necessary.



STEP 2 - Place Oven on Counter

- Recommended countertop surface depth is 26" (66 cm).
- Do not install oven next to or above source of heat, such as pizza oven or deep fat fryer. This could cause oven to operate improperly and could shorten life of electrical parts.
- Do not block or obstruct oven filters. Allow access for cleaning.
- Install oven on level countertop surface.
- Outlet should be located so that plug is accessible when oven is in place.

STEP 3 - Install Rack

- Install oven rack
  1. Oven cavity must be cool to touch.
  2. Place rack in oven with rear guard positioned toward the back of the oven.

⚠ **DO NOT cook food directly on floor of oven.**

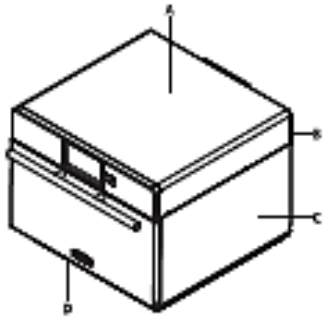

Oven Clearances

A. Allow at least 2" (5.1 cm) of clearance around top of oven. Proper air flow around oven cools electrical components. With restricted air flow, oven may not operate properly and life of electrical parts is reduced.

B. There is not an installation clearance requirement for the back of the oven.

C. Allow at least 1" (2.54 cm) of clearance around sides of oven.

D. Install oven so oven bottom is at least 3 feet (91.5 cm) above floor.

Quick Start Reference Guide | AXP & MXP High Speed Commercial Combination Oven

Refer to Product Safety Manual for Safety Statements. Complete Owner's Manual available online

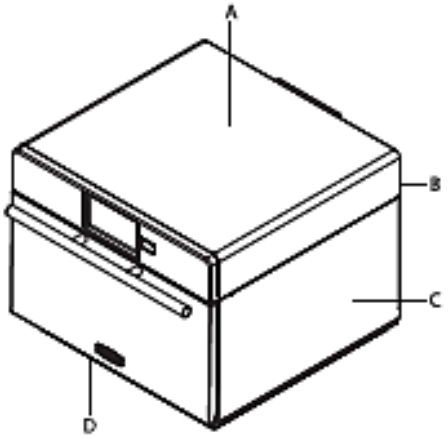

Oven Clearances

A. Allow at least 2" (5.1 cm) of clearance around top of oven. Proper air flow around oven cools electrical components. With restricted air flow, oven may not operate properly and life of electrical parts is reduced.
B. There is not an installation clearance requirement for the back of the oven.
C. Allow at least 1" (2.54 cm) of clearance around sides of oven.
D. Install oven so oven bottom is at least 3 feet (91.5 cm) above floor.

Oven Operation

Turn the Oven On, Preheat

This oven can be set to a preheat temperature between 200°F (95°C) and 520°F (270°C).

1. Oven must be plugged in. *(Screen will power on to "Standby mode" within approximately 30 seconds.)*
2. Touch the green "Power" icon
3. The preheat temperature of the oven will appear in the display.

Touch the power key again to interrupt preheating, or touch the blue menu icon to access main menu and user options.

Care and Cleaning Basics

Refer to Owner's Manual for complete instructions and recommendations (available online)

DO wear protective gloves and glasses

DO always use recommended cleaning supplies: *Damp towel, plastic scouring pad, ACP Oven Cleaner and ACP Oven Shield Protectant*

DO allow oven and tools to cool before cleaning

DO NOT use caustic cleaning products

DO NOT use water pressure style cleaning systems

DO NOT spray cleaning solution into perforations.

Cooking with Preprogrammed Menu Items

1. After oven has preheated to desired temperature, open oven door, place food in oven and close door
2. Scroll to choose desired food item from menu and touch the food item you wish to cook. The cook cycle will begin and screen will show remaining cook time.

Note: If "Preheat Warning" is enabled (customized user setting, see page 6), and preheat temperature differs from default preheat temperature, the control will interrupt cook cycle.
To guarantee that oven reaches desired temperature before cook cycle begins, enable "Preheat Warning" in user options.

3. At the end of the cooking cycle, the oven beeps, and displays animation. Remove the food from the oven.

Manual Cooking

Note: "Manual cooking" must be enabled in user options (see page 6)

Use manual cooking when a specific entered time and cooking power levels are desired. It's very useful when you are experimenting with new food items. Maximum *total* cook time is 99:99. Individual stages cannot exceed 60 minutes. Microwave, Fan and IR can be set to power levels between 0-100%.

***Note:** You may also create and edit recipes using the ACP Programming Application.*



1. After oven has preheated touch blue menu icon.

   ***Note:** To guarantee that oven reaches the desired temperature before the start of cook cycle, enable "Preheat Warning" in user options*

2



2. Touch the *"Manual Recipe"* option.



3. To change **cooking temperature** for recipe, touch temperature icon on the left and input new temperature. Two frequently used temperatures will appear for quick selection. Touch green check mark after inputting a temperature.



4. For Stage 1, enter **cooking time** by touching time entry box. A number pad will appear. Enter the time (*up to 60 minutes per stage*) Touch "OK" icon.

3-7

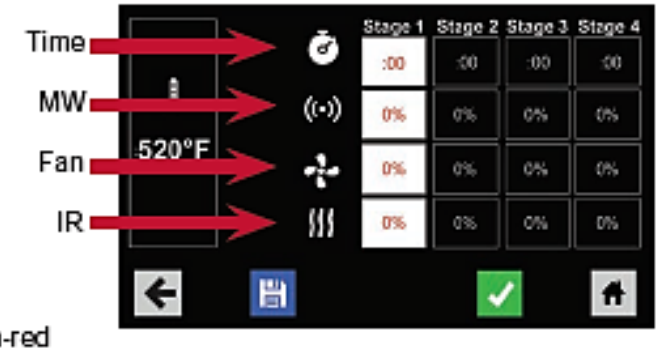



5. Select desired **microwave power** by touching microwave power entry box. Choose from options ranging from 0% - 100%.



6. Select desired **fan speed** by touching fan speed entry box. Choose from options ranging from 0% - 100%.



7. Select desired **infra-red power** by touching infra-red power entry box. Choose from options ranging from 0% - 100%.

8. Repeat steps 4-7 for each cooking stage, if more than one cooking stage is necessary.

   ***Note:** To save without cooking first, touch the save icon.* 
   Follow instructions on the next page.



9. Open oven door and place food in oven. Touch green check mark icon to begin cooking.

   Once the cook cycle is complete, open door and use oven mitts and/or paddle to carefully remove food.
   The display will return to the manual input screen. See instructions on next page to save and edit menu item from manual cook.

Save a Menu Item from Manual Cook:

1. To save the settings and create menu item, touch the blue save icon
2. Choose a background color and icon, or an image to customize the menu item. Touch the right arrow to move to the next screen.
3. Name recipe and touch the green check mark to save.
4. To reorganize menu items, you may touch, hold and drag them. Touch green check mark to complete this step and save the menu item.

Note: For larger, and more complex menus, it may be more manageable to create and edit menus using the ACP Programming Application. For detailed instructions, please visit: **acpsolutions.com/oven-programming/**

Manually Edit an Existing Menu Item:

1. Touch the blue menu icon at the bottom of the screen.
2. Touch the *"Edit Recipe"* option.

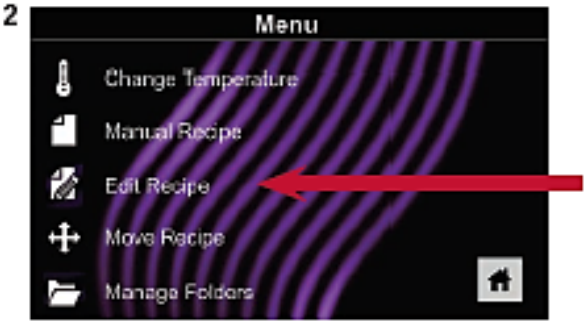

3. Touch the desired recipe to be edited. The control will prompt you to the manual editing screen, where you may revise the cooking settings.

   To delete the menu item, *touch the orange garbage can icon. Touch the green check mark to confirm, or touch the "X" to dismiss.*

4. ***Note:****Skip this step if you do not want to cook anything.*

   Open the oven door and place the food in the oven. Touch green check mark icon to begin cooking with the revised menu item settings. The display will return to the manual input screen at the end of the cook cycle.

5. Touch the right arrow icon to save any changes made to cook settings and move to the next screen.
6. If desired, choose a different background color. Touch the right arrow to select an image at the next screen. Touch the right arrow again to move to the next screen.
7. If desired, change the name of the recipe. Touch green check mark to save the menu item.

Manually Move Recipe:

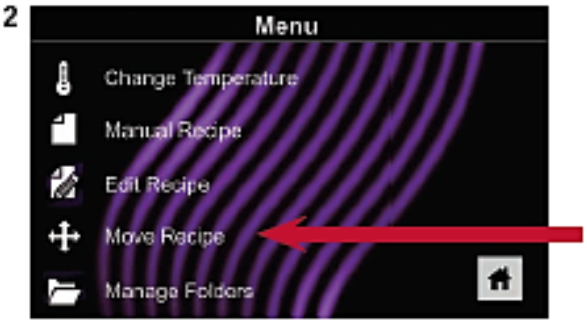

1. Touch the blue menu icon at the bottom of the screen.
2. Touch the *"Move Recipe"* option.
3. Touch, hold, and drag recipes to different locations on the screen

   Move a recipe into a folder: Touch, hold and drag the recipe to the folder.

   Move a recipe out of a folder: Touch, hold and drag the recipe to the top of the screen

Caution: Uploading a new file will overwrite existing items on oven. To ensure items are not lost, first backup files by exporting to USB drive.

Export Menu via USB Flash Drive

1. Touch the blue menu icon at the bottom of the screen.
2. Scroll down and touch the *"Load File"* option
3. When prompted, insert the flash drive into the USB port
4. When prompted, select "Export Files".
   "Copying Files" screen will appear.
   Do **not** remove USB Flash Drive until "Success" screen appears.
5. Once the file have copied, touch the "Home" icon to return to the main screen. Remove USB Flash Drive. Settings and menu items will be loaded on USB Flash Drive and ready to use in ACP Programming Application.

2

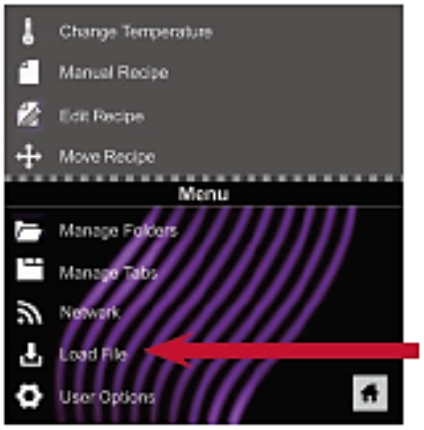

3



4

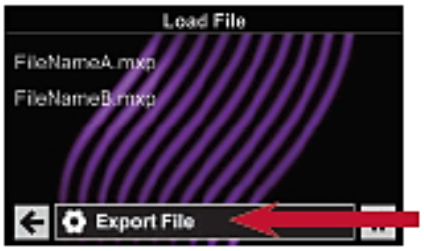

Open Menu in ACP Programming Application

Note:For more comprehensive instructions, see ACP Programming Application User Guide online

1. Insert flash drive into USB port on computer.
2. Open ACP Programming Application.
3. Select "File," then "Open." Navigate to flash drive. Select menu file and open.

Import Menu via USB Flash Drive

1. Touch the blue menu icon at the bottom of the screen.
2. Scroll down and touch the *"Load File"* option

   ***Caution:** Uploading a new file will overwrite existing items on oven.To ensure items are not lost, first backup files by exporting to USB drive.*
3. When prompted, insert the flash drive into the USB port
4. Touch the desired file to be uploaded.
5. Once file has uploaded, touch the "Home" icon to return to the main screen.
   Settings and menu items will now be loaded and ready to use.

4

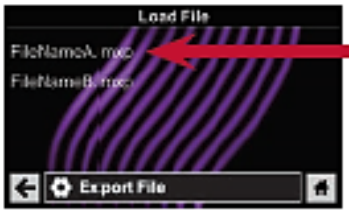

Connect Oven to Network:



1. Touch the blue menu icon at the bottom of the screen.
2. Touch the *"Network"* option.
3. Connect to network using your choice of Ethernet or Wifi:

To connect via Wi-Fi:

- Enable Wi-Fi capability by touching the "On" option.
- Select the desired Wi-Fi network. Enter the network's password. If the network does not immediately appear, touch "Search" to locate the Wi-Fi network.

To connect via Ethernet:

- Make sure the Ethernet cord is plugged into the back of the oven and wall jack. If necessary, use pliers to gently remove plastic plug from Ethernet port on right rear of oven. Insert Ethernet cable.



Connect Computer to Oven via Wi-Fi/Ethernet:

1. Connect computer to same network and enter password.
2. An IP address will appear on oven control once it has connected to the network. Open an internet browser window on computer and type in the IP address exactly as it appears on oven screen.
3. Enter your log-in information:

Log-in Information	
Username	ACP_MXP
Password	Express



4. The oven and computer are now connected.



Transfer Recipe Information via Wi-Fi/Ethernet:

1. After connecting the computer to the oven and logging in, click on the "Upload Recipes" tab in browser window.

   ***Caution:** Uploading a new file will overwrite existing items on oven. To ensure items are not lost, first backup files by exporting to USB drive.*

2. Upload menu file by following the instructions on web page. Touch the green check mark.

3. Once the file has been fully uploaded, a message will appear that says *"Upload Successful!"* The recipes will be imported when the oven enters standby mode."

4. To cycle the oven through standby mode, touch the home icon then the green power icon. Oven will begin cooling down. Touch the red stop icon to return to home screen. Menu items and settings will be uploaded and ready to use.

There are several options you can change to customize the operation of the oven for your business. The table below shows these options. **Factory default setting is shown in bold type.**



Access and Modify User Options:



1. Touch the blue menu icon at the bottom of the screen.
2. Scroll down and touch to select *"User Options."*



3. Use this menu to modify oven settings.
   Touch the left arrow to return to the menu after making each change.

***Note:** You may also make user options changes using the ACP Programming Application.*

	STANDARD DEFAULT PER MODEL	
User Option	**AXP & MXP, 60Hz**	**AXP & MXP, 50Hz**
Language	**English,** Chinese (Mandarin), Japanese, Korean, Russian, German, French, Italian, Polish, Danish, Greek, Latin, Swedish, Portuguese, Spanish, Thai, Lao, Dutch, Vietnamese, Arabic, Ukrainian, Filipino, Norwegian, Hindi, Bengali	**English,** Chinese (Mandarin), Japanese, Korean, Russian, German, French, Italian, Polish, Danish, Greek, Latin, Swedish, Portuguese, Spanish, Thai, Lao, Dutch, Vietnamese, Arabic, Ukrainian, Filipino, Norwegian, Hindi, Bengali
Time	12 Hr 24 Hr	12 Hr 24 Hr
Date	MM / DD / YYYY DD / MM / YYYY	MM / DD / YYYY DD / MM / YYYY
Temperature Scale	Celsius **Fahrenheit**	**Celsius** Fahrenheit
Preheat Temperature *200°F - 520°F (93°C - 270°C)*	**520°F (270°C)**	**270°C (520°F)**
Keypad Activation	**30 seconds** 60 seconds 2 minutes	**30 seconds** 60 seconds 2 minutes
Brightness	Low Med **High**	Low Med **High**
Key Beep	**On** Off	**On** Off
Volume	Low **Medium** High	Low **Medium** High
End of Cycle Beep	Three Beeps (Once) **Three Beeps (Repeating)** Continuous Until Door is Opened	Three Beeps (Once) **Three Beeps (Repeating)** Continuous Until Door is Opened
Allow Manual Cook	**On** Off	**On** Off
Allow Manual Save	**On** Off	**On** Off
PIN Code **must be a 4-digit numeric PIN*	On* **Off**	On* **Off**
Opening Door Behavior	Reset Timer **Pauses Cook Cycle**	Reset Timer **Pauses Cook Cycle**
Clean Filter Reminder	Every 7 Days Every 30 Days Every 90 Days **Off**	Every 7 Days Every 30 Days Every 90 Days **Off**
Preheat Warning	On **Off**	On **Off**
Auto Shut Off	2 Hours 4 Hours 8 Hours **Off**	2 Hours 4 Hours 8 Hours **Off**

FIRMWARE UPDATE PROCEDURE

The Touch Control is designed to be updated as future technology and programming requirements change. Should new firmware be required follow the steps below. Firmware updates are made available at:

http://acpsolutions.com/oven-programming/

1. Ensure the oven is powered on.
2. If the standby (off) screen is showing, press the green power button.
3. Press the blue menu button.
4. If the PIN is enabled, enter 1-3-5-7-9 to access service mode.

   If the PIN is not enabled the menu will appear.

   - Touch and drag up to scroll to the bottom of the menu and select “User Options”.
   - Touch and drag up to scroll down through the user options and select “PIN Code”.
   - Select On, enter and remember a 4 digit Pin Code and then select the home button.
   - Now press the blue menu button and enter 1-3-5-7-9 to access service mode.

5. Ensure the software version displayed is less than the version being installed, then press the home button and proceed to program loading.
6. Select “Software Version”.
7. Insert the USB/flash drive with the new firmware into the USB port.
8. A box will appear in the lower portion of the screen “Rev “xxxx” Available Begin Update”.
9. Press this box to begin firmware update. The screen will now display “Entering Standby Mode” for a few seconds and then the screen will go blank. Continue to wait.
10. The screen will blink, then a few seconds later the Startup logo will appear. Underneath will appear the word “Updating” along with a progress bar. Continue to wait. Note: Do not remove the USB/flash drive

    until AFTER the reboot is completed.
11. After about two minutes the words “Update Complete” will appear and a green “Reboot” button will appear. Do not remove the USB/flash drive. Press the green button.
12. Once the ACP logo and green power button appear, remove the flash drive and press the green power button.
13. Press the blue menu button and enter 1-3-5-7-9 to access service mode.
14. Verify the software version displayed is new version.
15. Press the home button.
16. The firmware update is complete.

CARE and CLEANING

Daily Cleaning Recommendations: Follow the recommendations below for proper maintenance of the AXP/MXP oven.
Please note: The use of caustic cleaning products or those containing ammonia, phosphates, chlorine, sodium or potassium hydroxide (lye) can damage critical oven parts. Do not use water pressure type cleaning systems. Use of unapproved cleaning agents will void the terms of the warranty.
Recommended Cleaning Supplies: damp towel, plastic scouring pad, ACP Oven Cleaner (Item CL10) and ACP Oven Shield Oven Protectant (Item SH10).

⚠ WARNING	Wear protective gloves and protective glasses when cleaning the oven. To prevent burns, handle utensils, accessories, and door with care. Allow oven, utensils, and accessories to cool before cleaning. Oven, utensils, and accessories become hot during operation.

I. For a new oven, before using it the first time:

When oven is clean, spray damp towel with ACP Oven Shield and wipe all interior surfaces. Do not remove Oven Shield Oven Protectant. Turn oven on and pre-heat to start cooking.

II. DAILY CLEANING



1A. If oven is hot: Shut oven off by pressing OFF button twice and open door. Fan will continue running until oven has cooled. Cooling takes 15-20 minutes.
1B. If oven is cold: For optimum results heat oven to a maximum temp of 200°F (95°C), turn oven OFF, wait until fan stops.



2. Remove rack, pizza stone, and other accessories from the cavity when it's cooled

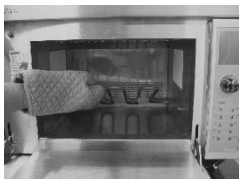

3. Lift Bottom Element
If element is warm, use insulated gloves, oven mitt or tongs to lift the element. Remove baked on particles using a scraper.



4. Spray Oven Interior
Wear rubber gloves and safety glasses. Spray oven door, sides and floor with ACP Oven Cleaner. Avoid spraying into perforations. Allow cleaner to soak for 2 minutes.



5. Clean Oven Interior
5A. Clean the oven door and interior using a plastic scouring pad on metal portions of oven. White ceramic covers on the both sides of the oven turn to a yellow tan color after usage. Gently clean the ceramic covers and red sealant, apply only gentle pressure while cleaning. If needed, repeat steps 4 and 5.
5B. Clean perforated area with damp towel sprayed with cleaner.





6. Wipe Oven Interior
Using a damp clean towel, wipe the oven interior, rinse towel and wring dry, repeat 2-3 times to remove remaining oven cleaner and particles from the oven.



7. Spray Oven Shield
When oven is clean, spray a thin layer of ACP Oven Shield on all interior surfaces. Place rack back in oven.
Do not remove Oven Shield.



8. Clean Oven Exterior
Clean exterior door and other surfaces with a clean cloth, sponge or nylon pad using a mild detergent and warm water solution.

OVEN CONSTRUCTION

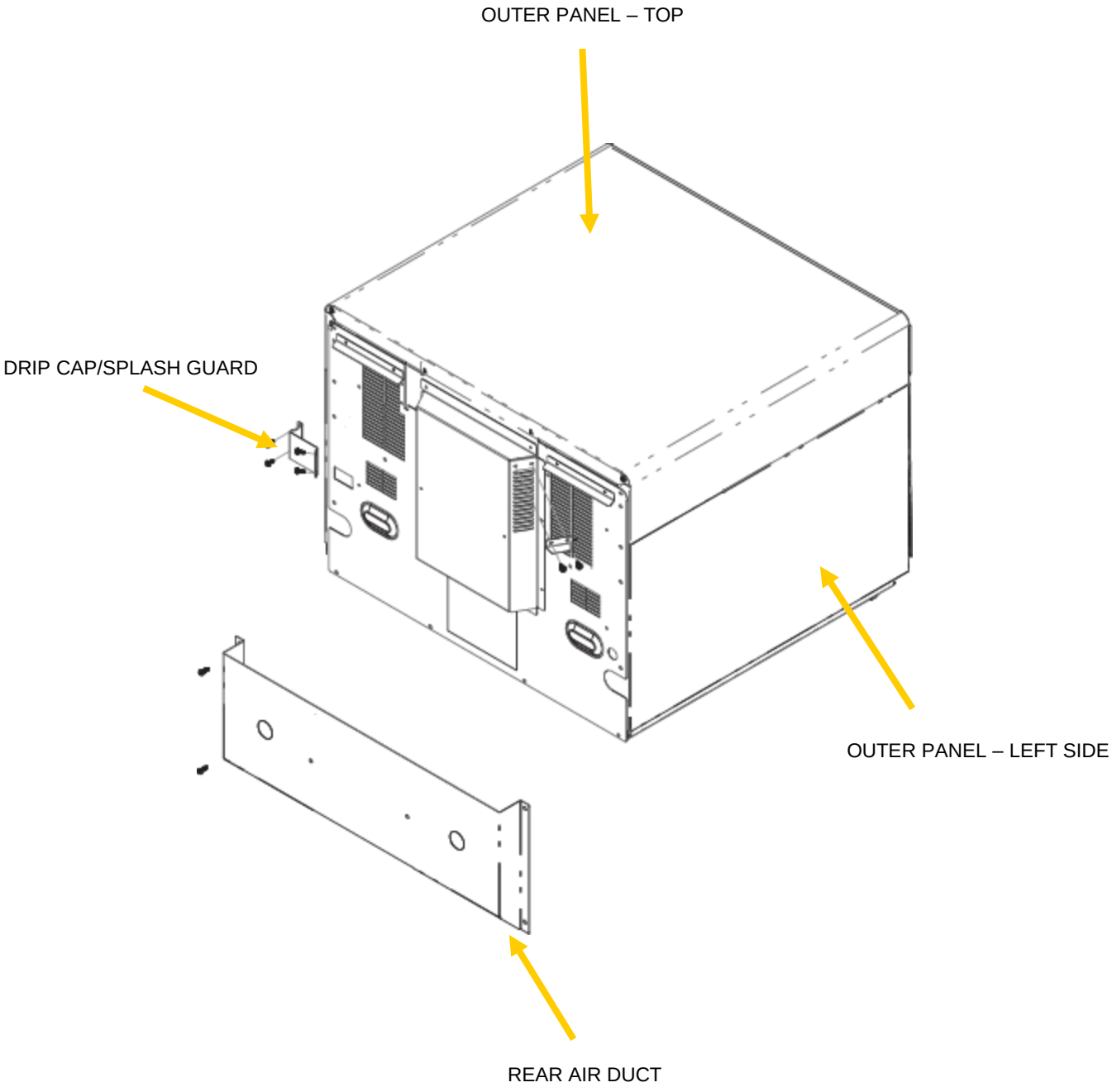

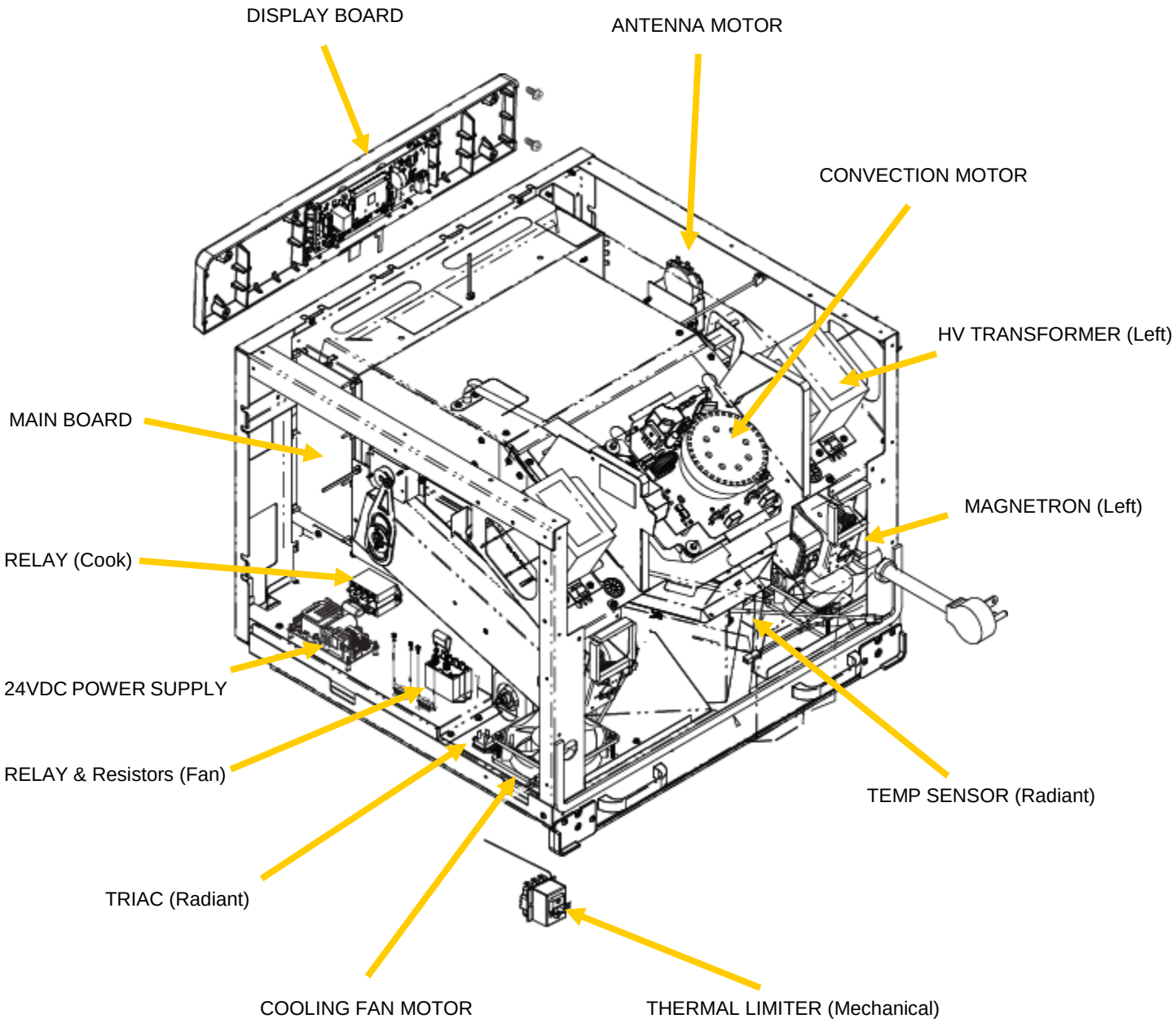
DISPLAY BOARD
ANTENNA MOTOR
CONVECTION MOTOR
HV TRANSFORMER (Left)
MAIN BOARD
MAGNETRON (Left)
RELAY (Cook)
24VDC POWER SUPPLY
RELAY & Resistors (Fan)
TEMP SENSOR (Radiant)
TRIAC (Radiant)
COOLING FAN MOTOR
THERMAL LIMITER (Mechanical)

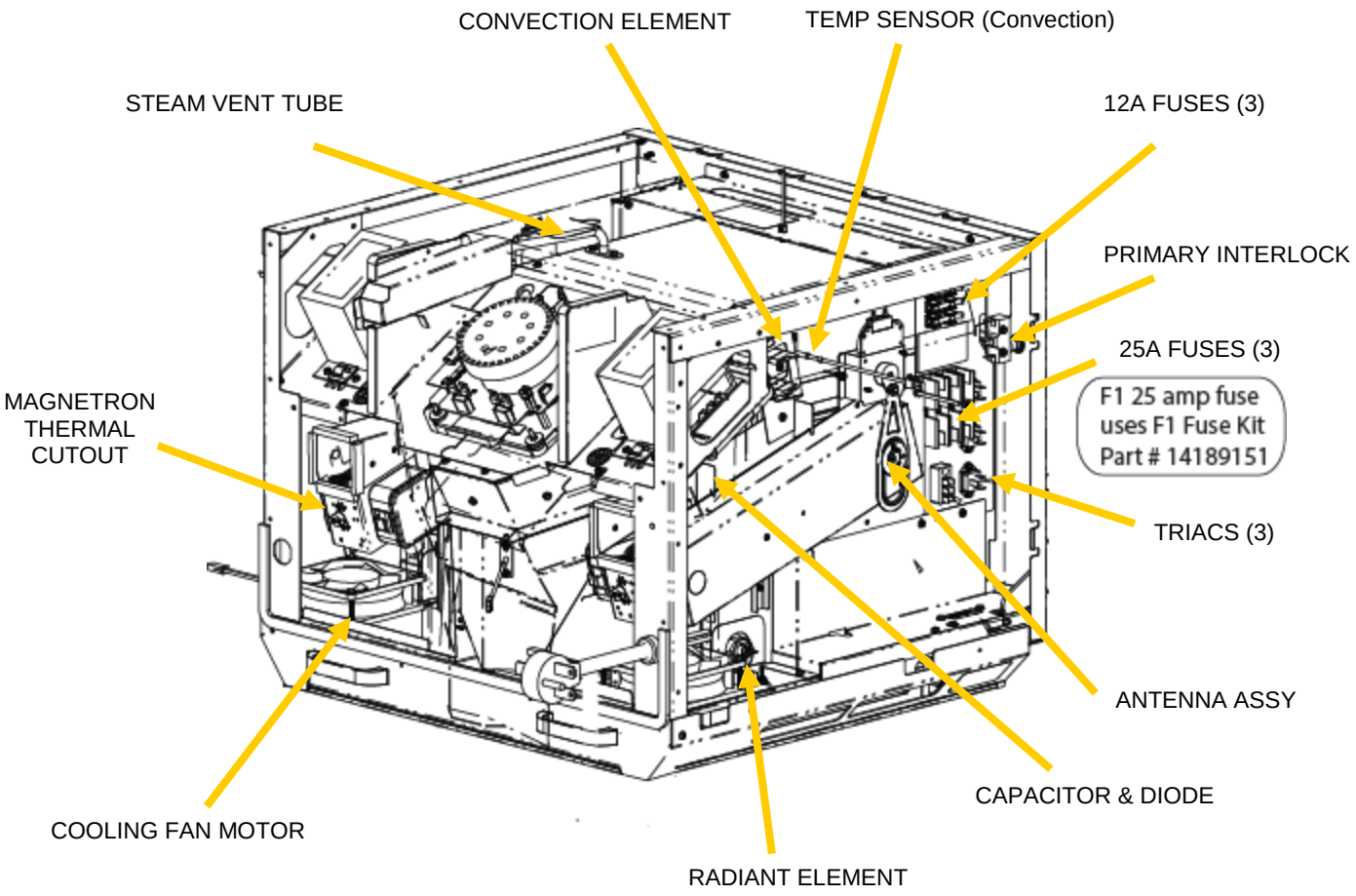
CONVECTION ELEMENT
TEMP SENSOR (Convection)
STEAM VENT TUBE
12A FUSES (3)
PRIMARY INTERLOCK
25A FUSES (3)
F1 25 amp fuse uses F1 Fuse Kit Part # 14189151
MAGNETRON THERMAL CUTOUT
TRIACS (3)
ANTENNA ASSY
CAPACITOR & DIODE
COOLING FAN MOTOR
RADIANT ELEMENT

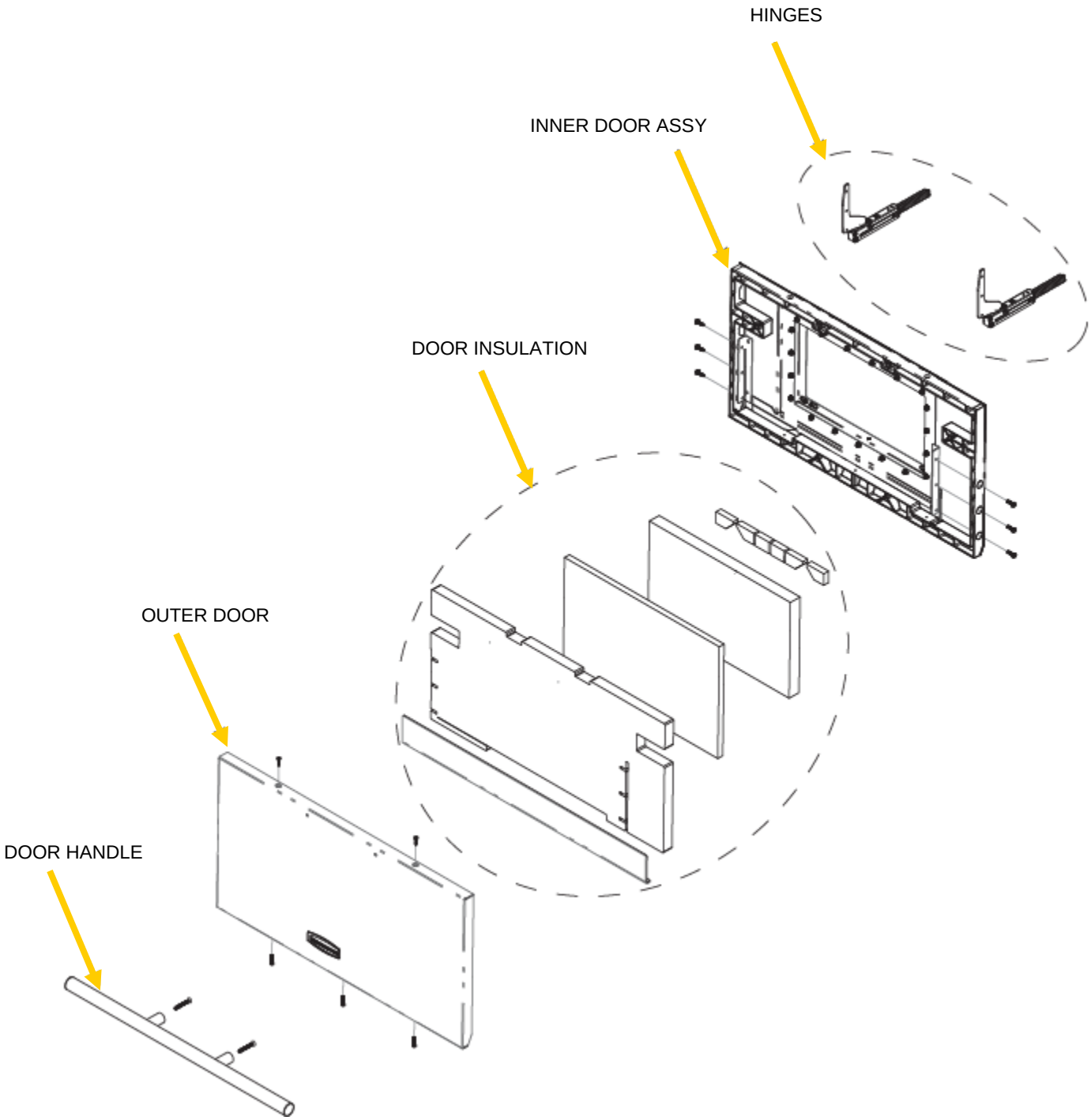
HINGES
INNER DOOR ASSY
DOOR INSULATION
OUTER DOOR
DOOR HANDLE

ANTENNA MOTOR ASSEMBLY & RADIANT HEATER

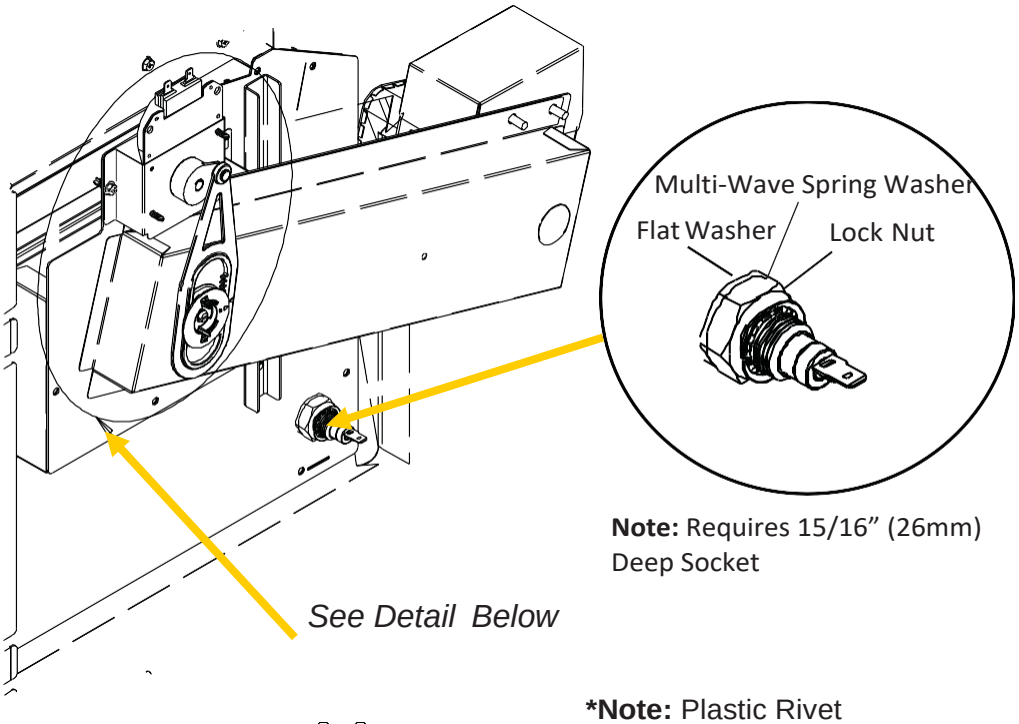

Note: Requires 15/16” (26mm) Deep Socket

***Note:** Plastic Rivet Should not be reused.

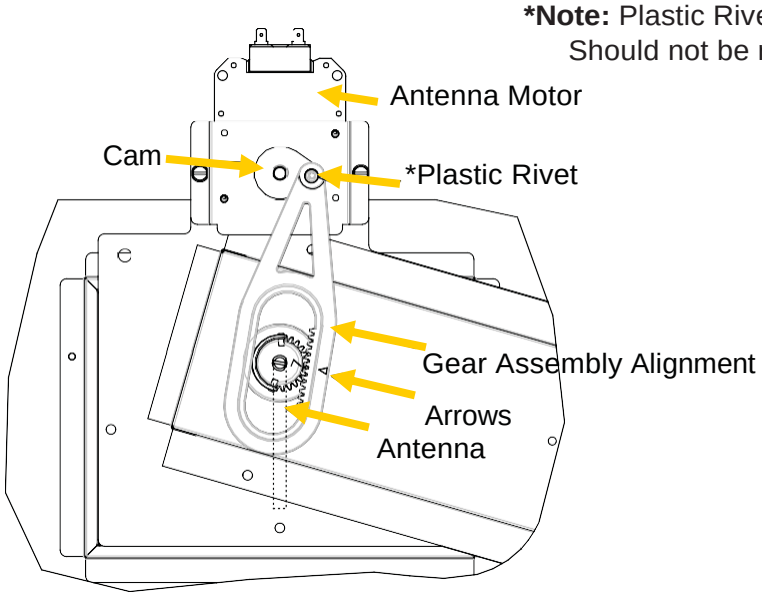

STIRRER COVER & WAVEGUIDE KITS

Antenna & Stirrer Cover Kit - 14114053

- **If the stirrer cover is broken but the waveguide is clean and clear of any debris,** the Stirrer Cover can be replaced without replacing waveguide. Ceramic trays for both waveguides are available as a separate kit which includes (1) stirrer cover, antenna, a tube of high temperature sealer and installation instructions.

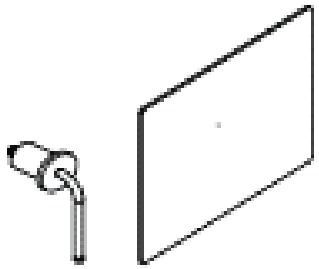

Replaceable Waveguide – 14119054 (LH) 14119055 (RH)

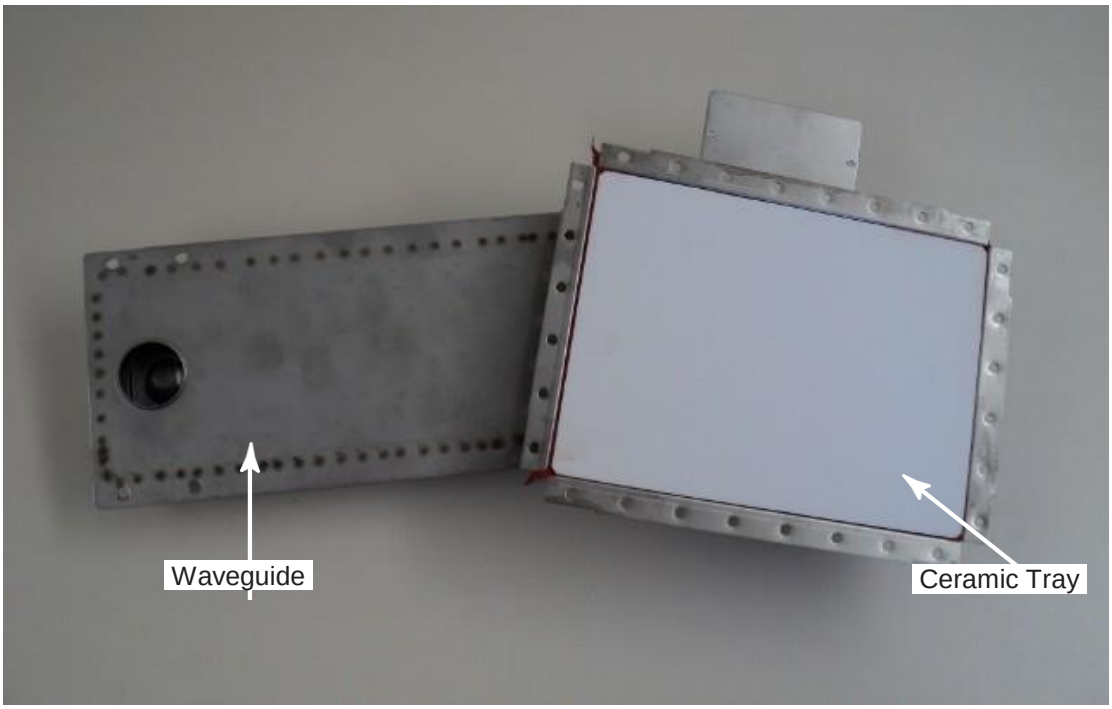

- **Waveguides** are replaceable on AXP22* / MXP22* models. Waveguides are available as a right hand or left hand waveguide kit which includes new mounting nuts, studs, antenna, and ceramic tray installed in waveguide with installation instructions.

TEFLON LINERS INSTRUCTIONS

TL10 Set of 5 (2 sides, back, door, & floor)

TL10T Set of 4 (2 sides, back, & door). Used on ovens equipped with Radiant Element Cover

TL10T2 Set of 2 (2 sides only)

Some ovens may be equipped with a PTFE (non-stick) coated liner material to enable easy cleaning of the oven using an approved cleaner. The life expectancy of the liners depends on how much you use your oven.

- Heavy usage – 2-5 months
- Medium usage – 5-8 months
- Light usage – 8-12 months

The liners are supplied cut to size for each oven cavity surface (Floor and rear cavity walls do not require liners). Kits are available based upon individual model numbers.

Check that you have the correct items available before starting the application process.

No special tools are required to apply the liners. The oven must be cool and clean of all grease and debris before applying the liners to the cavity.

The liners are supplied with a backing sheet which must be removed during the application process.

Step 1 Remove the internal rack.
Step 2 The oven interior must be clean and free from grease and oven residue. If cleaning is necessary use an approved cleaner to remove residue; rinse and wipe the surface dry. DO NOT use abrasive scouring pads to clean ceramic top cover. Avoid using caustic cleaning products or those containing ammonia, phosphates, chlorine, sodium or potassium hydroxide (lye). If needed fully remove grease, first spray on towel, then wipe down oven cavity.
Step 3 Identify the sheet cut to fit each cavity surface (left, right, rear, floor and door). Peel the backing sheet from one edge by approximately 1 inch (3 cm) and carefully apply to the appropriate area.
Step 4 Gently pull away the backing sheet from the liner while pressing the liner into position using care to minimize any air pockets or bubbles between the liner and the cavity.
Step 5 Repeat step 4 for the remaining liners.

Liner Removal if Liner was Installed Previously:

Step 1 Clean oven cavity of heavy grease and debris.
Step 2 Lift one corner of the used liner sheet and gently pull away from surface.
Step 3 Ensure that the surfaces are free from burned on residue and left over adhesive before the new liners can be applied. If any grease or oven residue remains, use an approved cleaner to remove, rinse and wipe the surface dry. DO NOT use abrasive scouring pads to clean ceramic top cover. Avoid using caustic cleaning products or those containing ammonia, phosphates, chlorine, sodium or potassium hydroxide (lye).
Step 4 Apply new liners following "Application" directions.

COMPONENT TESTING PROCEDURES

Illustration	Component	Test	Results
	Thermal cutout	Disconnect all wires from TCO. Measure resistance across terminals. Control TCO ..... Magnetron TCO	 Closed at 235°F (113°C) and open at 150°F (66°C) Open at 300°F (149°C) and closed at 257°F (125°C)
	Diode	**Discharge Capacitor** Remove diode lead from capacitor and connect ohmmeter. Reverse leads for second test.	Infinite resistance should be measured in one direction and 50KΩ or more in the opposite direction. **NOTE:** Ohmmeter must contain a battery of 6 volts minimum.
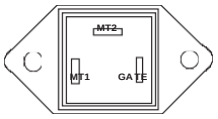	Triac	Disconnect wires to triac. Measure resistance from: MT1 to MT2 ..... MT1 to Gate ..... MT2 to Gate ..... All terminals to ground	**Caution - Do not operate oven with wire to terminal MT2 removed.** Infinite Approximately 15 Ω, then reverse meter leads 30 Ω Infinite Infinite
Triac 1 (top) is for front element Triac 2 (middle) is for rear element		Measure voltage from: MT1 to Gate	0.8 VAC when energized. If no voltage, check H.V. board and wiring.
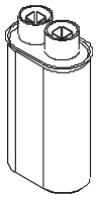	Capacitor	**Discharge Capacitor** Remove wires from capacitor terminals and connect ohmmeter, set on highest resistance scale to terminals. Also check between each terminal and capacitor case.....	 Between Terminals: Meter should momentarily deflect towards zero then return to over 5 MΩ. If no deflection occurs, or if continuous deflection occurs, replace capacitor. Terminal to Case: Infinite resistance
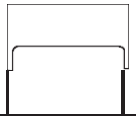	Snubber assembly	Disconnect wires to snubber. Measure resistance across terminals.....	 Infinite
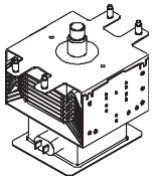	Magnetron	**Discharge Capacitor** Remove wires from magnetron and connect ohmmeter to terminals. Also check between each terminal and ground.	Between Terminals: Less than 1 Ω Each terminal to ground measures Infinite resistance. **Note:** This test is not conclusive. If oven does not heat and all other components test good replace the magnetron and retest.
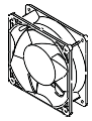	Cooling blower motor	Measure voltage at motor	 Approximately 24 vdc at incoming leads
	Stirrer motor	Remove all wires from terminals. Measure resistance from: Terminal to terminal.....	 Approximately 29K Ω
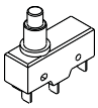	Interlock, primary	Remove violet and orange from terminals. Measure resistance from: NO to Common (Door Open)..... NO to Common (Door Closed).....	 Infinite Continuity

Illustration	Component	Test	Results
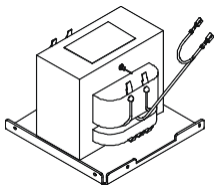	Transformer	**Discharge Capacitor** Remove all wires from terminals. Measure resistance from: 230 to COM..... 208 to COM..... 230 to Ground ..... 208 to Ground ..... Terminal 5 to 6 ..... Terminal 4 to Ground.....	 Less than 1 Ω Less than 1 Ω Infinite Infinite Less than 1 Ω Approximately 46 Ω
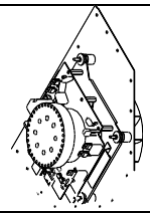	Convection blower motor	Perform service test on low and high speed to verify operation. Service test procedure is located in Service Test section.	
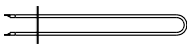	Convection heating element	Disconnect wires from terminals. Measure resistance across heating element. Element 2000 W.....	 Approximately 19 - 22 Ω
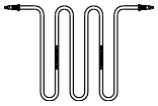	Cavity heating element	Disconnect wires from terminals. Measure resistance across heating element. Element 3000 W.....	 Approximately 14 Ω
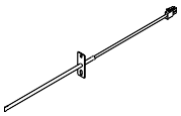	Temp Sensor (RTD) (Convection Heater) Temp Sensor (Cavity Heater) Temp Sensor	Temperature 32°F ..... 350°F	Resistance 1000 Ω 1654 Ω
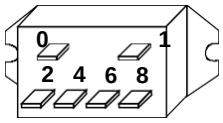	Relay This relay contains a diode in the coil circuit.	Measure resistance from: Terminal 0 to terminal 1 (coil) ..... 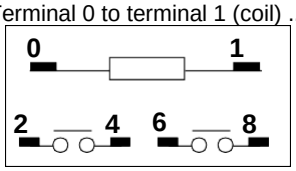	Approximately 6 to 7 M Ω Terminal 0 - 1 Line Voltage Terminal 2 - 6 Line Voltage Terminal 4 - 8 Line Voltage **NOTE:** Analog meter is recommended for measurement. **NOTE:** If using a digital meter it must contain a battery of 6 volts minimum.
Wire harness	High voltage board to display module harness	Test continuity of wires	Indicates continuity
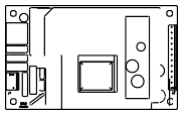	Power supply board 24 Volt	Input voltage Orange J1-1 to Red J1-3..... Red J2-1 to White J2-6 Power Supply Board	Line Voltage Approximately 24 vdc
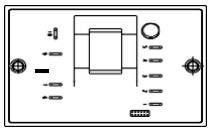	Limiter, Electronic (some Models)	Orange 9 to Red 10..... Yellow 6 to Yellow 7	Line Voltage Approximately 24 vdc
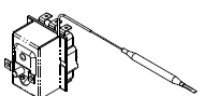	Thermal Cutout, Mechanical (some Models)	Yellow 21 to Yellow 22	Indicates continuity. Opens when above 320C (608F) or Below 0C

INTERLOCK SWITCH SERVICE

Check Interlock Switch Assembly (Monitor Switch) adjustment by taking an ohmmeter reading at double red on TRIAC 1 to double black on TRIAC 2.

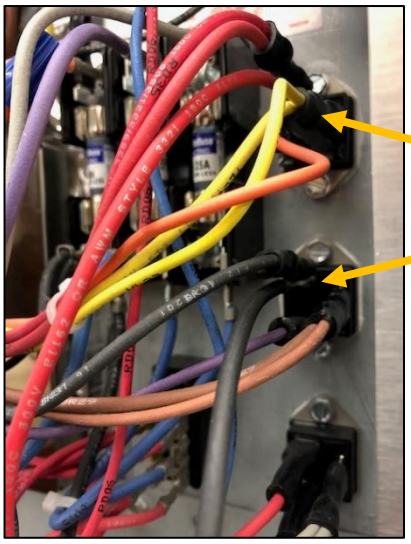

1. DOOR SHUT = OPEN
2. CLOSED WHEN DOOR OPENED 1/2in (13mm)

Should switch need adjustment, loosen ¼ head screws on either side of the adjustment tab, slide tab ONE POSITION, retighten screws and retest.

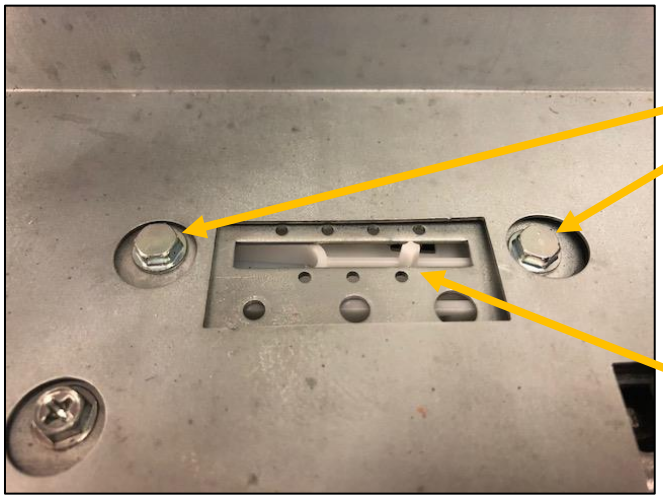

LOOSEN SCREWS

ADJUSTMENT TAB STARTING POSITION

SERVICE TEST MODE

The Service Mode is a useful tool to aid in diagnosing any service issue. To access the oven's service test mode, **the PIN Code must be enabled.** If the PIN Code is not enabled, enable it (See Below). To determine if the PIN CODE is enabled, press the blue menu icon. If the PIN Code prompt appears it is enabled.

With the PIN Code enabled;

1. Press green start pad
2. Press the blue menu icon and the PIN Code prompt will display
3. Enter, in order, 1, 3, 5, 7, 9 and the Service Mode is initiated

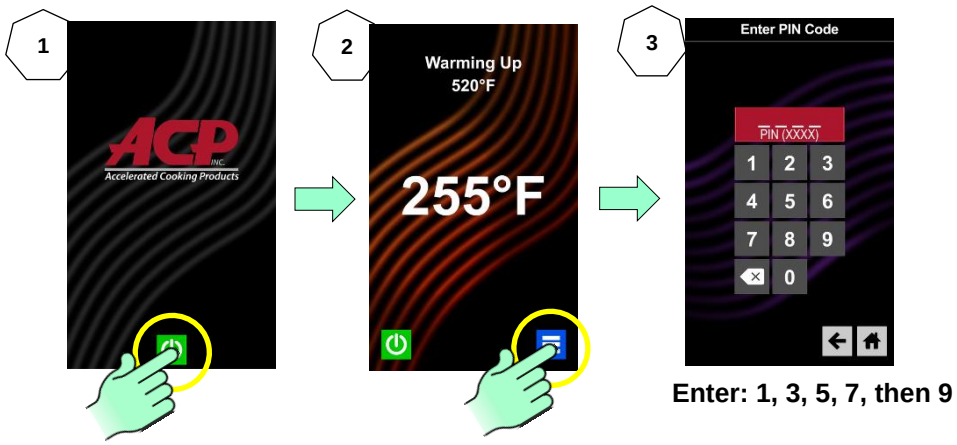

Enter: 1, 3, 5, 7, then 9

If the PIN Code is not enabled, it must be enabled in the User's Options. With oven on, press the blue menu icon at the bottom of the screen;

1.
2. Press the blue menu icon and the PIN Code prompt will display
3. Scroll screen to "User Options" and press it.
4. Scroll screen to PIN Code (it will say "DISABLED" underneath) and press it.
5. Press the radial pad "On" and ensure it is lit.
6. Enter 1,2,3,4 as PIN Code and memorize, take a picture, or write it down.
7. Press the "Home" icon to return to Main Screen
8. Press the blue menu icon and the PIN Code prompt will display
9. Enter, in order, 1, 3, 5, 7, 9 and the Service Mode is initiated

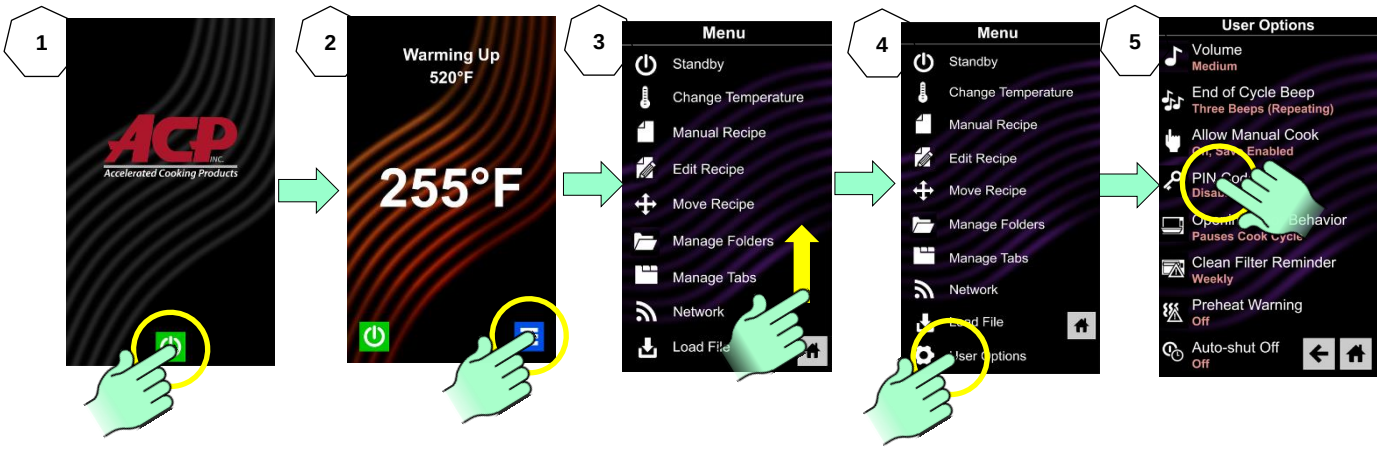

Once the Service Mode is initiated a menu of options and information is displayed. The menu screen can be navigated by swiping up or down if needed. Some components can be activated from this menu – See example of Magnetron 1 (Right Side) below, by touching start to start or stop to stop. Pressing the “back arrow” will return back on screen. Pressing the “home” icon returns to opening screen.

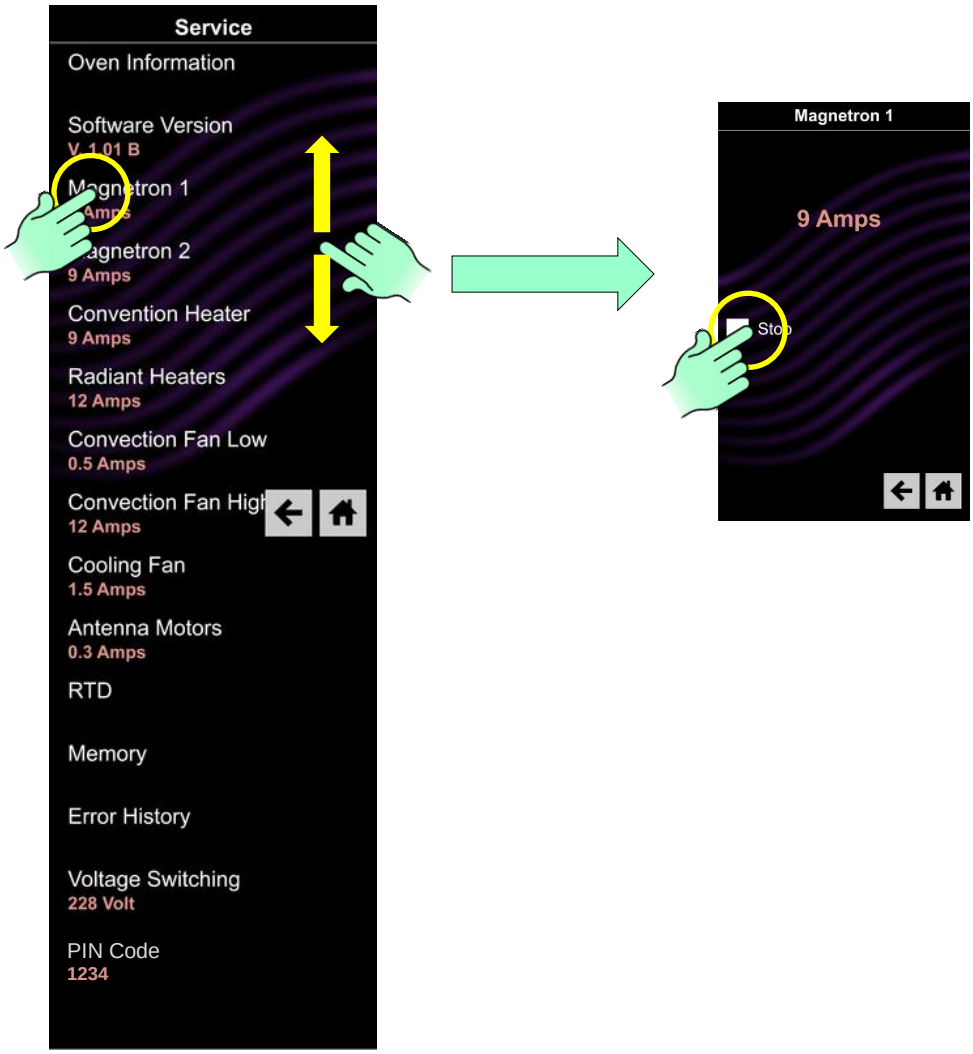

Service Mode	Purpose	Comments
Oven Information	Provide service provider with door cycles and magnetron tube hours of operation	Press and the following will display: Door Cycles: Tube Hours:
Software Version	Displays the version of software and firmware installed in the control	Press and the following will display: SW: EE: App:
Magnetron 1 Right Side	System can be started and stopped by pressing the Start or Stop icon.	The current amperage being drawn by the HV system. 5 -12amps is considered normal. Look for consistent reading with Magnetron 2 and Convection Heater. This circuit is protected by fuse F3
Magnetron 2 Left Side	System can be started and stopped by pressing the Start or Stop icon	The current amperage being drawn by the HV system. 5 -12amps is considered normal. Look for consistent reading with Magnetron

		1 and Convection Heater. This circuit is protected by fuse F4
Both Magnetrons	Both systems can be started and stopped by pressing the Start or Stop icon	The current amperage being drawn by BOTH HV systems. Look for consistent readings with Convection Heater. These are protected by Fuses F3 & F4.
Convection Heater	Heater can be stopped and started by pressing the Start Stop icon	The current amperage being drawn by the Convection Heater. 7-15 amps is considered normal. This circuit protected by fuse F5
Radiant Heater	Heater can be stopped and started by pressing the Start Stop icon.	The current amperage being drawn by the Convection Heater. 10-20amps is considered normal. This circuit is protected by fuse F6
Convection Fan Low	Convection Fan Motor Low Speed can be stopped and started by pressing the Start or Stop icon.	The current amperage being drawn by the Convection Fan Motor on low speed. <2 amps and fan motor operating noise is considered normal. This circuit is protected by fuse F2.
Convection Fan High	Convection Fan Motor High Speed can be stopped and started by pressing the Start or Stop icon.	The current amperage being drawn by the Convection Fan Motor on low speed. <3 amps and a high speed fan motor operating noise is considered normal. This circuit is protected by fuse F2.
Cooling Fan	Motors can be stopped and started by pressing the Start Stop icon.	The current amperage being drawn by both the Cooling Fan Motors. 1-3 amps is considered normal. A failed Cooling Fan motor will likely result in a G2 Error Code
Antenna Motors	Both Antenna Motors can be started by pressing the Start icon. NOTE: pressing Stop icon will not stop the antenna motors. They continue to run until Service Mode is exited.	Antenna Motors draw very low amperage. It is normal to have 0 amps displayed. Service provider should visible inspect operation.
RTD	Resistive Thermal Devices (aka Temp Sensors) Press and the current temperature sensed by the two RTD's along with the maximum temperature recorded by both.	The Radiant RTD is located at the back center of oven. The Convection RTD is located on the upper left by the Convection Element. To reset maximum temperature reading, press and hold the Max Convection RTD for several seconds—temperature will change to the current temperature sensed.
Memory	Attached Memory Devices	Press and the following will display: USB Present or Absent SD Card Present or Absent
Error History	Chronological List of Errors Experienced by the Control	Press and the following will display: Error Code Date, Time, and Code (see Error Code List in this section)
Voltage Switching	Displays the voltage as sensed by the control.	Pressing has no effect.
Temperature Offset	The degree of offset programmed into control to synchronize control to cavity temperature.	Press and the following will display: The amount of temperature offset programmed by the factory
Pin Code	Displays the 4 Digit Pin Code	Pressing has no effect.

ERROR CODES

Code	Description	Corrective Action
A2	Invalid Display Firmware	Update Firmware or Replace Touch Control
B1	Touch Screen Error	Replace Touch Control
B2	Wifi Error	Reset Control. Multiple Failures Replace Touch Control
B3	Wifi Error	Reset Control. Multiple Failures Replace Touch Control
C0	Radiant Temp Sensor (RTD)-Open	Replace Temp Sensor (Back of Oven)
C1	Radiant Temp Sensor (RTD)-Shorted	Replace Temp Sensor (Back of Oven)
D0	Convect Temp Sensor (RTD)-Open	Replace Temp Sensor (Top Left of Oven)
D1	Convect Temp Sensor (RTD)-Shorted	Replace Temp Sensor (Top Left Oven)
G0	Oven Exceeded Max. Temp.	<u>ELECTRONIC LIMITER model</u> Unplug / Plug oven in If G0 Continues: Check wire connections at main board J7-1, & 2, Test Thermocouple & RTDs --Replace if Necessary, Replace Electronic Limiter. <u>MECHANICAL THERMAL CUTOUT model</u> After oven cools, press the reset button found on the bottom, back right hand corner of unit. If unable to reset, Replace Mechanical Limiter. NOTE: Limiter may trip if subjected to sub-freezing temperatures
G2	Open Magnetron TCO	Perform service test (Magnetron #1 & #2) Board Senses an Open Magnetron TCO. Inspect Cooling Fan Motor Operation and Airflow, TCO's and Wiring.
H0	Zero Cross Failure	No or Intermittent Voltage at J1 Connector on Main Control Board.
H2	Invalid System State	Main Control Board
H3	Invalid EEPROM/FLASH	Main Control Board
I1	Current Sense-No/Low Amps from Microwave Circuit	Perform Service Test (Magnetron #1 & #2) Suspect Door Switches not fully activated or weak door hinges. Secondary/Monitor Switch assembly is adjustable.
V0	Low Voltage	<188vac Detected by the Main Control Board
V1	High Voltage	>263vac Detected by the Main Control Board

Important Note: Error Code History cannot be cleared. Oldest codes will automatically be deleted when the history log is full.

MICROWAVE POWER TEST

Power Test
All ACP microwave oven power outputs are rated using the IEC705 standards. Using the IEC705 test method requires precision measurements and equipment that is not practical to be performed in the field. Using the test shown below will indicate if the oven performance is satisfactory.

Set Up for Power Test

1. The oven MUST BE at room temperature for best results
2. Service Test Mode “Both Magnetrons”

Test equipment required:
1000 ml test container and thermometer.

Procedure
Fill the test container to the 1000 ml line with cool tap water as close to 60° F / 16° C as possible.
Using the thermometer, stir water for ten seconds; measure, and record the temperature.
Place test container of water in the center of oven cavity and close door.
Heat the water for a 33-second full power cycle.
At end of the cycle, remove test container. Using the thermometer, stir water for ten seconds and record temperature.
Subtract the starting water temperature from the ending water temperature to obtain the temperature rise.
If the temperature rise meets or exceeds the nominal microwave energy rating found on the model/serial tag, the test is complete. If the temperature rise fails to meet the minimum temperature rise, test the line voltage to verify it is correct. Then repeat steps 1-6 making sure to change the water. If the temperature rise fails to meet the minimum temperature rise again the oven will require service.

Minimum Temperature Rise at Thirty -Three (33) Seconds Run Time

ΔT (°F)	Cooking Power Output	ΔT (°F)	Cooking Power Output	ΔT (°C)	Cooking Power Output	ΔT (°C)	Cooking Power Output
10	1000	20	2000	5	1000	11	2000
11	1100	21	2100	5.5	1100	11.5	2100
12	1200	22	2200	6.5	1200	12	2200
14	1400	24	2400	7.5	1400	13	2400
17	1700	25	2500	9.5	1700	13.5	2500
18	1800	27	2700	10	1800	15	2700
19	1900	30	3000	10.5	1900	16.5	3000

Important Notes:
Low line voltage will cause low temperature rise / power output. Ovens must be on a dedicated circuit, properly grounded, and polarized. Other equipment on the same circuit may cause a low temperature rise / power output. This test and results are not a true IEC705 test procedure and are only intended to provide servicers with an easy means of determining if the microwave oven cooking output is correct.

SCHEMATICS & DIAGRAMS

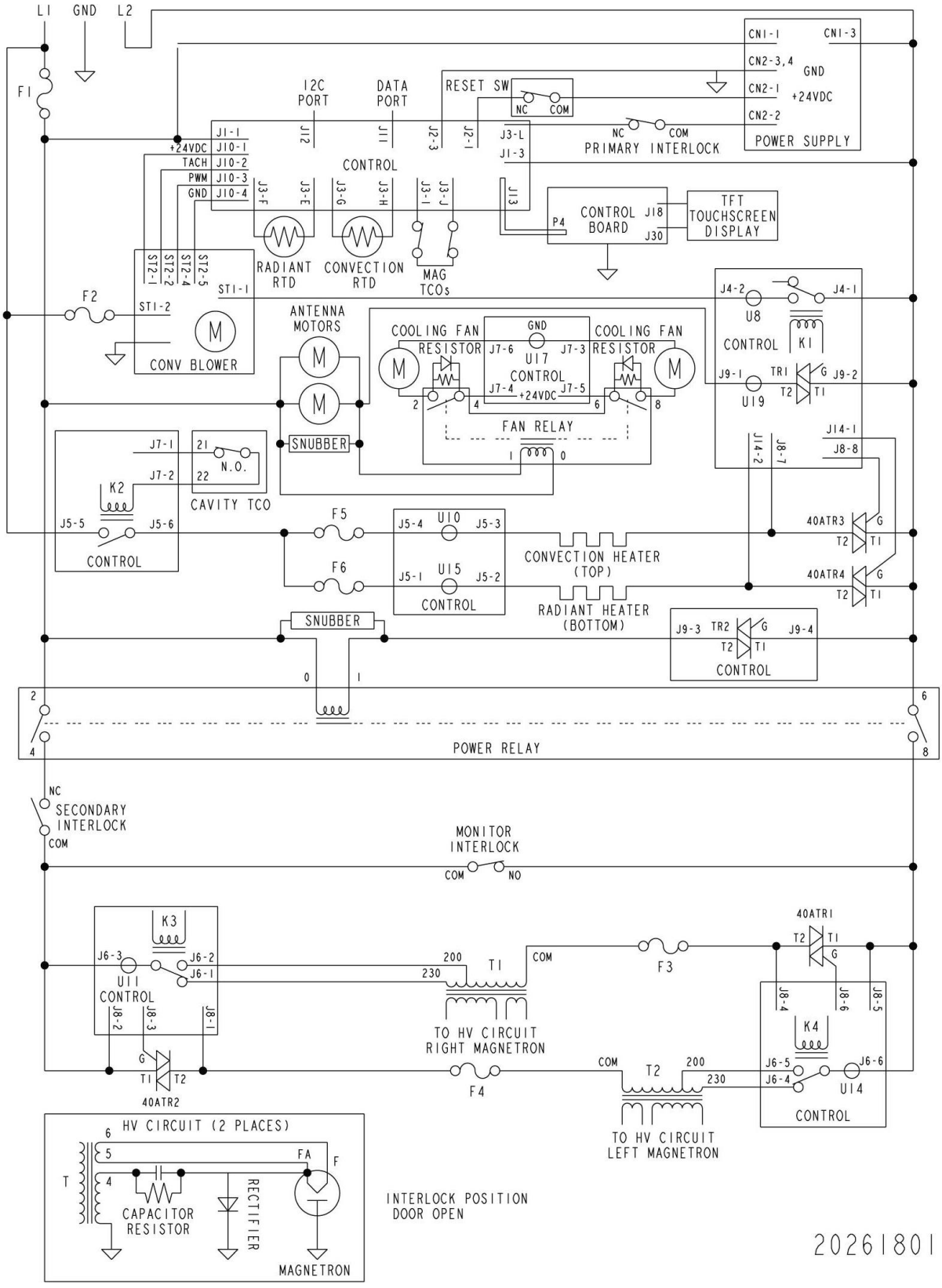

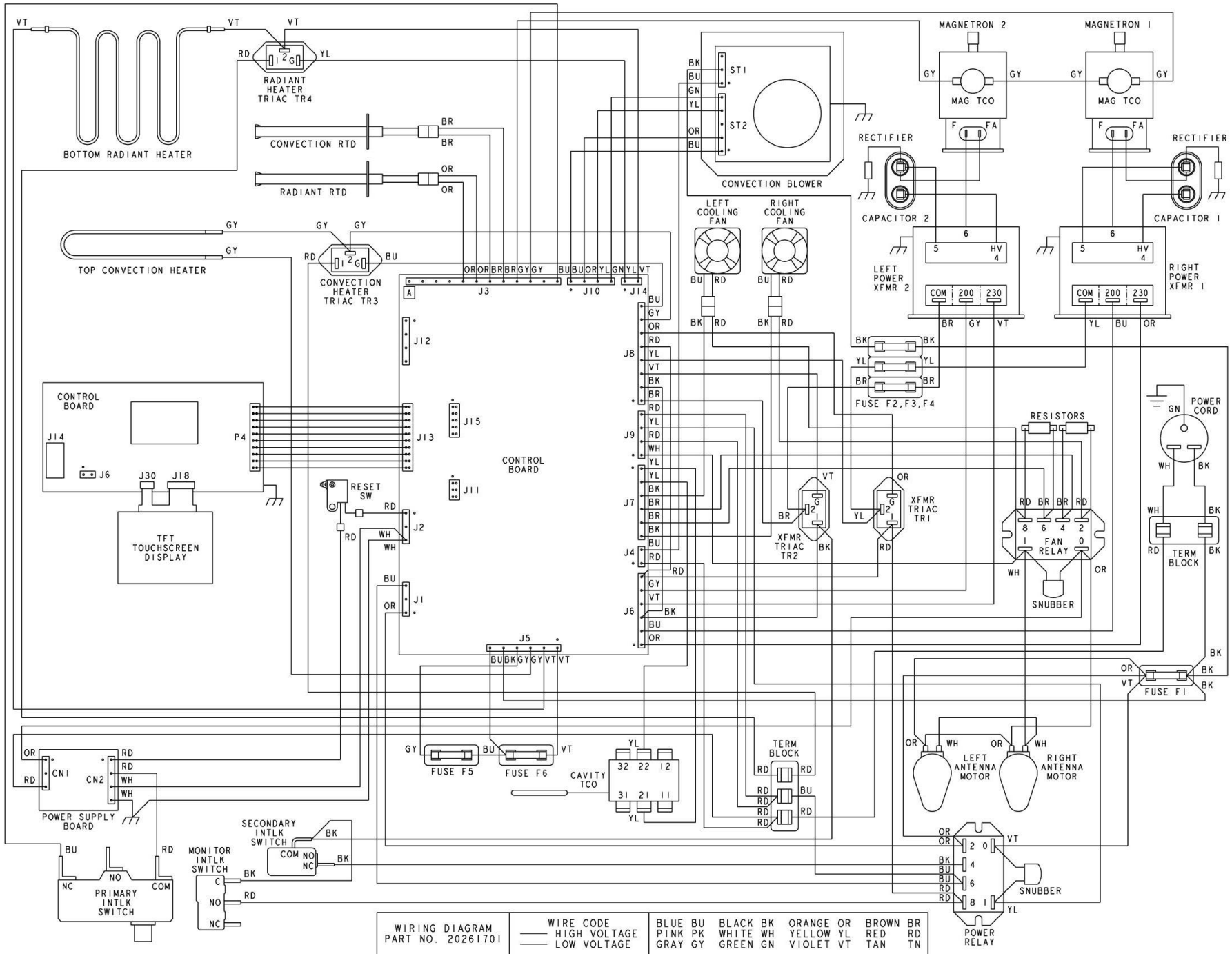
BOTTOM RADIANT HEATER
RADIANT HEATER TRIAC TR4
CONVECTION RTD
RADIANT RTD
TOP CONVECTION HEATER
CONVECTION HEATER TRIAC TR3
CONVECTION BLOWER
MAGNETRON 2
MAGNETRON 1
MAG TCO
RECTIFIER
CAPACITOR 2
CAPACITOR 1
LEFT COOLING FAN
RIGHT COOLING FAN
LEFT POWER XFMR 2
RIGHT POWER XFMR 1
FUSE F2,F3,F4
CONTROL BOARD
TFT TOUCHSCREEN DISPLAY
RESET SW
XFMR TRIAC TR2
XFMR TRIAC TR1
RESISTORS
FAN RELAY
SNUBBER
POWER CORD
TERM BLOCK
FUSE F1
FUSE F5
FUSE F6
CAVITY TCO
LEFT ANTENNA MOTOR
RIGHT ANTENNA MOTOR
POWER SUPPLY BOARD
SECONDARY INTLK SWITCH
MONITOR INTLK SWITCH
PRIMARY INTLK SWITCH
POWER RELAY
WIRING DIAGRAM PART NO. 20261701
WIRE CODE
HIGH VOLTAGE
LOW VOLTAGE
BLUE BU BLACK BK ORANGE OR BROWN BR
PINK PK WHITE WH YELLOW YL RED RD
GRAY GY GREEN GN VIOLET VT TAN TN

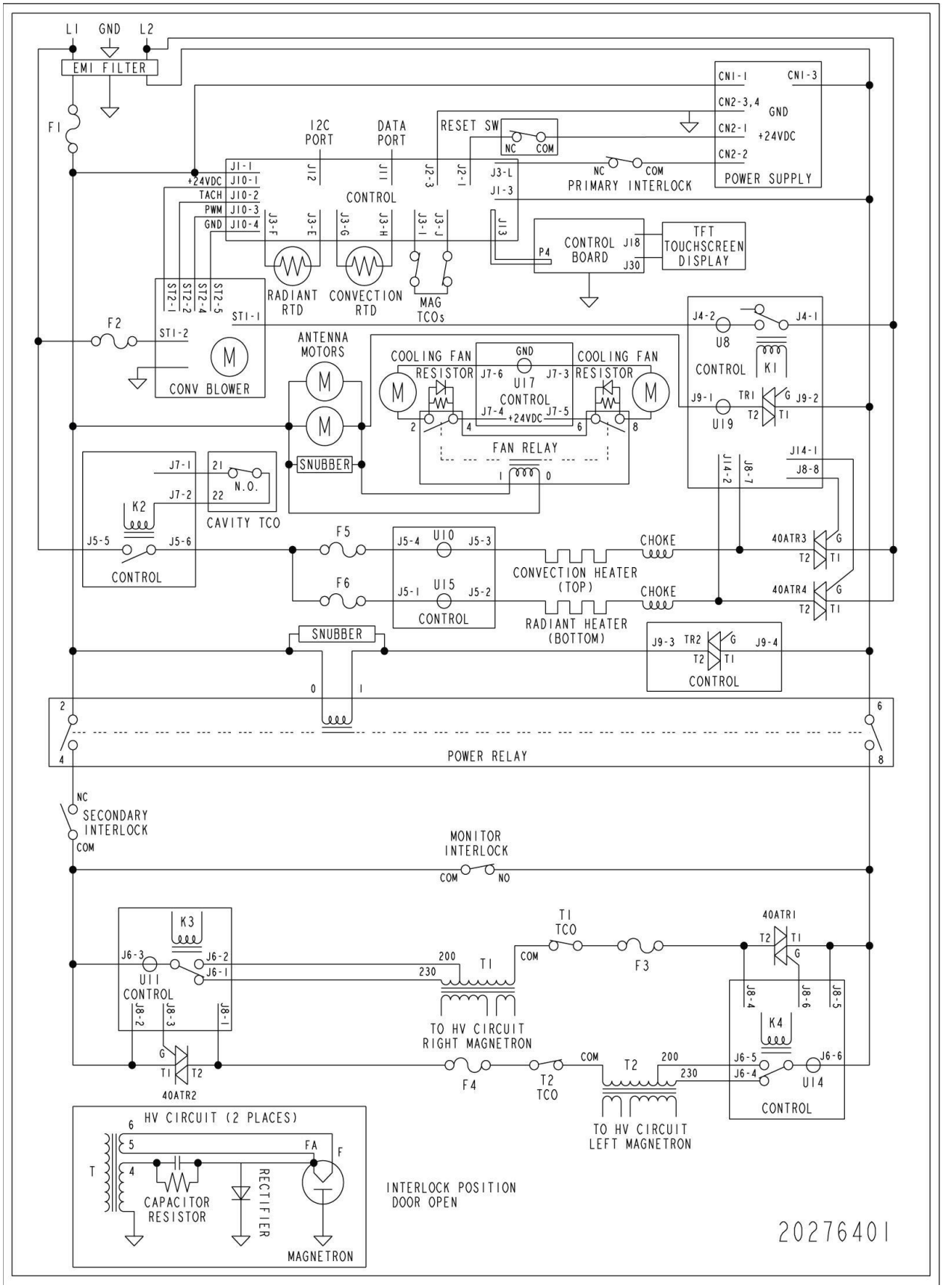
L1
GND
L2
EMI FILTER
F1
I2C PORT
DATA PORT
RESET SW
NC
COM
CN1-1
CN1-3
CN2-3,4
GND
CN2-1
+24VDC
CN2-2
POWER SUPPLY
NC
COM
PRIMARY INTERLOCK
J1-1
+24VDC
J10-1
TACH
J10-2
PWM
J10-3
GND
J10-4
J12
J11
J2-3
J2-1
J3-L
J1-3
CONTROL
J3-F
J3-E
J3-G
J3-H
J3-I
J3-J
J13
P4
CONTROL BOARD
J18
J30
TFT TOUCHSCREEN DISPLAY
RADIANT RTD
CONVECTION RTD
MAG TCOs
ST2-1
ST2-2
ST2-4
ST2-5
ST1-1
ST1-2
F2
M
CONV BLOWER
ANTENNA MOTORS
COOLING FAN
RESISTOR
GND
J7-6
U17
CONTROL
J7-3
J7-4
+24VDC
J7-5
FAN RELAY
J4-2
J4-1
U8
CONTROL
K1
J9-1
TR1
G
J9-2
T2
T1
U19
J14-1
J14-2
J8-7
J8-8
J7-1
21
N.O.
22
J7-2
CAVITY TCO
K2
J5-5
J5-6
CONTROL
F5
F6
J5-4
U10
J5-3
J5-1
U15
J5-2
CONTROL
CHOKE
CONVECTION HEATER (TOP)
RADIANT HEATER (BOTTOM)
40ATR3
40ATR4
SNUBBER
J9-3
TR2
J9-4
CONTROL
POWER RELAY
NC
SECONDARY INTERLOCK
COM
MONITOR INTERLOCK
COM
NO
K3
J6-3
J6-2
J6-1
U11
CONTROL
J8-2
J8-3
J8-1
G
T1
T2
40ATR2
200
230
T1
TO HV CIRCUIT RIGHT MAGNETRON
T1 TCO
COM
F3
40ATR1
J8-4
J8-6
J8-5
K4
J6-5
J6-4
J6-6
U14
CONTROL
F4
T2 TCO
COM
T2
200
230
TO HV CIRCUIT LEFT MAGNETRON
HV CIRCUIT (2 PLACES)
6
5
FA
F
T
4
CAPACITOR
RESISTOR
RECTIFIER
MAGNETRON
INTERLOCK POSITION
DOOR OPEN
20276401

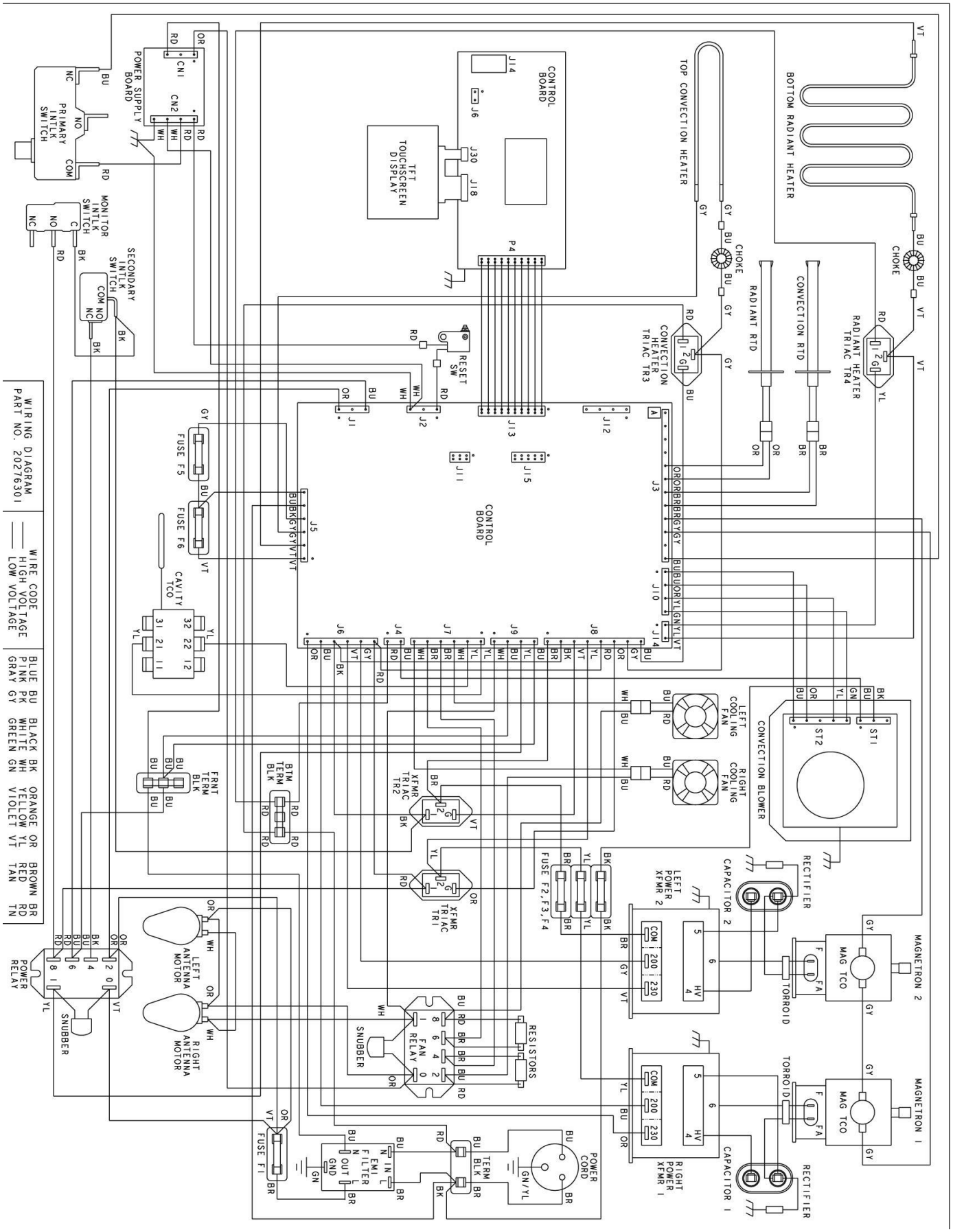
WIRING DIAGRAM
PART NO. 20276301
WIRE CODE
HIGH VOLTAGE
LOW VOLTAGE
BLUE BU
PINK PK
GRAY GY
BLACK BK
WHITE WH
GREEN GN
ORANGE OR
YELLOW YL
VIOLET VT
BROWN BR
RED RD
TAN TN
CONTROL BOARD
TFT TOUCHSCREEN DISPLAY
POWER SUPPLY BOARD
PRIMARY INTLK SWITCH
MONITOR INTLK SWITCH
SECONDARY INTLK SWITCH
TOP CONVECTION HEATER
BOTTOM RADIANT HEATER
CHOKE
RADIANT RTD
CONVECTION RTD
CONVECTION HEATER TRIAC TR3
RADIANT HEATER TRIAC TR4
RESET SW
FUSE F5
FUSE F6
CAVITY TCO
CONVECTION BLOWER
LEFT COOLING FAN
RIGHT COOLING FAN
FRNT TERM BLK
BTM TERM BLK
XFMR TRIAC TR2
XFMR TRIAC TR1
FUSE F2,F3,F4
LEFT POWER XFMR 2
RIGHT POWER XFMR 1
CAPACITOR 2
CAPACITOR 1
RECTIFIER
MAGNETRON 2
MAGNETRON 1
MAG TCO
TORROID
POWER RELAY
LEFT ANTENNA MOTOR
RIGHT ANTENNA MOTOR
SNUBBER
FAN RELAY
RESISTORS
TERM BLK
POWER CORD
EMI FILTER
FUSE F1