AMERICAN RANGE

A HATCO COMPANY

OWNER'S MANUAL, INSTALLATION, USE AND CARE
AR RESTAURANT SERIES RANGES
AR AND ARS HOT PLATE SERIES

BEFORE USING YOUR APPLIANCE, PLEASE READ THIS MANUAL, PAYING SPECIAL ATTENTION TO THE IMPORTANT SAFETY INSTRUCTIONS LOCATED IN THE NEXT SEVERAL PAGES

WARNING!

Improper installation, adjustment, alteration, service, or maintenance can cause property damage, injury, or death. Read the installation, operating and maintenance instructions thoroughly before installing or servicing this equipment.

FOR YOUR SAFETY

Do not store or use gasoline or other flammable vapors and liquids in the vicinity of this or any other appliance.

IMPORTANT – PLEASE READ AND FOLLOW!

Instructions to be followed in the event the user smells gas must be posted in a prominent location. This information must be obtained by consulting the local gas supplier.

⚠ CAUTION

Check your local building codes for proper installation methods. In the absence of local codes, this appliance must be installed in accordance with the National Fuel Gas Code No. Z223.1 current issue, and the National Electrical Code ANSI/NFPA No. 70 current issue, or the CAN – B149 Installation Codes for Gas Burning Appliances, and C22.1 Canadian Electrical Code Part 1.

Verify the type of gas supplied to the location, being sure that the appliance is connected to the type of gas for which it is certified. Models come from the factory certified for use with Natural Gas *(NG)* or Liquid Propane *(LP)* gas. Your product, shown on the rating label and the supplied gas type must be the same. Upon opening your product, the rating label can be located on the front panel. If it is a countertop, the rating label can be found on the rear panel.

If connecting this appliance to propane gas, make certain the propane gas tank is equipped with its own high-pressure regulator – in addition to the pressure regulator supplied with this product when applicable. The maximum propane gas pressure to this appliance must not exceed 14.0 inches of water column *(34.9 millibar)* from the propane gas tank to the pressure regulator.

INSTALLATION, OPERATION AND SERVICE PERSONNEL

Installation of the equipment should be performed by qualified, certified, licensed and/or authorized personnel who are experienced in state/local installation codes. Have the technician show you the exact location of the gas shut-off valve on the incoming gas line so you know how to turn off the gas if necessary.

Operation of the equipment should be performed by qualified or authorized personnel who have read this manual and understand and are familiar with the functions of the equipment.

Service of the equipment should be performed by qualified personnel who are knowledgeable with American Range products.

⚠ DANGER

1. A manual gas shut-off valve must be installed in the gas supply (service) line ahead of the appliance and gas pressure regulator in the gas stream for safety and ease of future maintenance/service.

2. The gas pressure regulator supplied with the appliance must be installed prior to connecting the equipment to the gas supply line. Failure to install a regulator will void the equipment warranty and result in a potentially hazardous condition.

3. Please contact the factory, a factory representative, or local service company to perform maintenance and repairs.

DESIGNED & BUILT IN USA
PROFESSIONAL COOKING EQUIPMENT

RETAIN THIS MANUAL FOR FUTURE REFERENCE

This equipment is design engineered for commercial use only.

IMPORTANT SAFETY INSTRUCTIONS

⚠	This is the SAFETY ALERT SYMBOL. This symbol alerts you to hazards which will result in severe injury or death.
⚠ **DANGER**	Hazards or unsafe practices which will result in severe personal injury or death.
⚠ **WARNING**	Hazards or unsafe practices which may result in severe personal injury or death.
⚠ **CAUTION**	Hazards or unsafe practices which may result in minor personal injury or property damage.

» Before beginning, please read all the instructions carefully.
» DO NOT remove permanently affixed labels, warnings, or plates from product. This may void the warranty.
» All local and national codes and ordinances must be observed, installation must conform with local codes.
» The Installer must leave these instructions with the consumer who must retain for local inspector's use and for future reference.
» Installation and service must be performed by a qualified installer, service agency or gas supplier.
» Please ensure that the product is properly grounded.
» **In the Commonwealth of Massachusetts, installation must be performed by a licensed plumber or gas fitter.**

Your safety and the safety of others is very important. We have provided many important safety messages in this manual and on your appliance. Always read and obey all safety messages.

IMPORTANT SERVICE NOTICE!

Using any part other than genuine American Range factory supplied parts relieves the manufacturer of all liability. American Range reserves the right to change specifications and product design without notice. Such revisions do not entitle the buyer to corresponding changes, improvements, additions or replacements for the previously purchased equipment.

⚠ WARNING

CA PROPOSITION 65: The burning of gas cooking fuel generates some chemical by-products which may expose you to chemicals including benzine, carbon monoxide, formaldehyde, and soot, which are known to the state of California to cause cancer and birth defects or other reproductive harm. To minimize exposure to these substances, always operate this unit according to the owner's manual, ensuring to provide proper ventilation.

For more information go to www.P65warnings.ca.gov.

⚠ WARNING

This is a vented appliance. The appliance is not to be installed in conjunction with an air curtain, range hood, or ventilation systems which operate by blowing air downward towards the appliance. This type of ventilation system may cause ignition and combustion problems with the gas cooking appliance resulting in personal injury or unintended operation.

Shipping Damage Claim Procedure

The equipment is crafted and inspected carefully by skilled personnel before leaving the factory. The transportation company assumes full responsibility for the safe delivery upon acceptance of the equipment.

If you receive a damaged product, immediately contact your delivery company, your dealer, your builder or installer. Do not install or attempt to operate a damaged appliance.

1. Note on the freight bill or express delivery any visible loss or damage and have the note signed by the person making the delivery.
2. File claim for damages immediately regardless of the extent of damages.
3. For damage noticed after unpacking (concealed loss or damage), notify the transportation company immediately and file a "Concealed Damage" claim with them. This must be done within five (5) days from the date that delivery is made to you. Retain the shipping container for inspection.

DESIGNED & BUILT IN USA
PROFESSIONAL COOKING EQUIPMENT
A70802 RevA 11012024

AMERICAN RANGE
A HATCO COMPANY

13592 Desmond St Pacoima CA 91331
T. 818.897.0808 Toll Free: 888.753.9898
www.AmericanRange.com

IMPORTANT SAFETY INSTRUCTIONS

⚠ WARNING

IF THE INFORMATION IN THIS MANUAL IS NOT FOLLOWED EXACTLY, A FIRE OR EXPLOSION MAY RESULT CAUSING DAMAGE, PERSONAL INJURY OR DEATH.

INSTALLATION AND SERVICE MUST BE PERFORMED BY A CERTIFIED / LICENSED INSTALLER, SERVICE AGENCY OR THE GAS SUPPLIER

» Do not store or use gasoline or other flammable vapors or liquids in the vicinity of this or any other appliance.

» **Provisions for adequate clearances for servicing and proper operation must be planned during installation. Keep the appliance area free and clear from combustible material.**

» Please observe all local and national codes and ordinances.

» Do not remove any permanent warning labels or plates from this product.

» Consumers must retain these instructions for local inspectors and for future use.

WHAT TO DO IF YOU SMELL GAS

» **Do not try to light any appliance**
» **Do not touch any electrical switch**
» **Do not use any phone in your building**
» **Using a neighbor's phone, immediately call your gas company.**
» **Follow the gas supplier instructions.**
» **If you cannot reach your gas supplier, call the Fire Department**

INSTALLATION

VENTILATION HOODS

Means must be provided for any commercial, heavy-duty cooking appliance to exhaust combustion waste products to the outside of the building. Usual practice is to place the unit under an exhaust hood. Filters and drip troughs should be part of any industrial hood. Consult local codes before constructing and installing a hood.

Room air movement should be monitored during installation. Strong exhaust fans in the hood or in the overall air conditioning system can produce a slight vacuum in the room and/or cause air drafts – either may interfere with the pilot or main burner performance and can also be hard to diagnose. If pilot burner or main burner outage problems persist – make up air openings or baffles may have to be provided in the room for adequate air supply.

Provisions shall be incorporated in the design of the kitchen to ensure adequate supply of fresh air and adequate clearance for air openings into the combustion chamber, for proper combustion and ventilation. For proper operation of the appliance, do not obstruct the flow of combustion and ventilation air.

INSTALLATION – GAS STANDARDS AND CODES

IMPORTANT – The installation of this appliance must conform to local codes or, in the absence of local codes, with the National Fuel Gas Code, ANSI Z223.1/NFPA 54, or the Natural Gas and Propane Installation Code, CSA 149.1 as applicable, including:

1. The appliance and its individual shut-off valve must be disconnected from the gas supply piping system during any pressure testing of that system at test pressure in excess of 1/2 psi (3.5 kPa).
2. The appliance must be isolated from the gas supply piping system by closing its individual manual shut-off valve during any pressure testing of the gas supply piping system at test pressures equal to or less than 1/2 psi (3.5kpa).

The appliance, when installed, must be wired, and electrically grounded in accordance with local codes, or in the absence of local codes, with the National Electric Code, ANSI/NFPA 70, or the Canadian Electrical Code, CSA C22.2 as applicable.

INSTALLATION

GAS CONNECTION – The Range or Hot Plates requires one gas connection. The gas inlet line size of this appliance is 3/4" NPT. For proper operation, the gas service supply line must be the same size or greater than the inlet line size of the appliance. The gas line must not be reduced at any point along the supply line.

MANUAL SHUT-OFF VALVE – A gas pressure regulator and a contractor-supplied shut-off valve must be plumbed in the gas service line ahead of the appliance – in a physical location where it can be reached quickly in the event of an emergency.

NATURAL GAS

A. Gas pressure regulator
B. 90º Street elbow
C. Adapter (must be 3/4" male pipe thread)
D. Flexible connector
E. Manual gas shut-off valve
F. 3/4" gas supply
G. Use pipe-joint compound

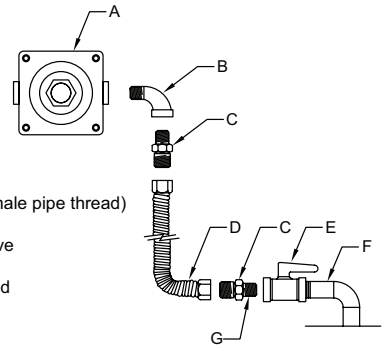

LP GAS

A. Gas pressure regulator
B. 90º Street elbow
C. Adapter (must be 3/4" male pipe thread)
D. Flexible connector
E. Manual gas shut-off valve
F. 3/4" gas supply
G. Use pipe-joint compound
H. Step down regulator

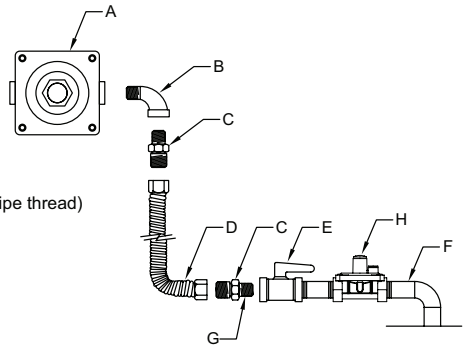

The gas pressure regulator must be installed in the gas line – failure to install a pressure regulator will void the equipment warranty. The regulators supplied with Radiant Broilers have 3/4" NPT connections; the regulator is adjusted at the factory for 5" W.C. (water column) manifold gas pressure (natural gas) or 10" W.C. manifold gas pressure for propane gas operation.

Before connecting the regulator, check the incoming line pressure – as these regulators can only withstand a maximum inlet pressure of 14" W.C. (1/2 PSI); exceeding this pressure will damage them. Visually double check any installer-supplied intake pipes and/or blow them out using compressed air to clear any dirt or debris, threading chips, or other foreign matter – before installing a service line. Those particles will clog gas orifices when gas pressure is applied. Compounds used on threaded joints of this appliance piping must be resistant to the action of NG and LP gas and provide a gas tight seal to prevent leaks. If the gas supply line pressure is greater than this amount, a step-down regulator will be required. A gas flow direction arrow is cast into the body of the regulator to minimize installation error – it should point downstream to the appliance. The blue air vent cap on the top of the regulator is part of the regulator and should not be removed.

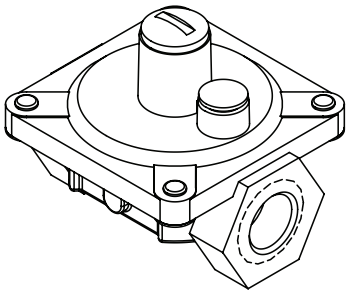

Any adjustment to the regulator must be made only by qualified and licensed service personnel with the proper calibrated test equipment. Gas connections should be run by a qualified licensed contractor.

INSTALLATION

⚠ WARNING

When installing the pressure regulator – remember it can only handle 1/2 PSI. In every LPG installation, you have high source pressures, ranging from 20 PSI to 100 PSI. If the high-pressure gas line from the LPG tank is directly connected to the unit without the proper step-down regulator, it will rupture the diaphragm in the valve, rendering it useless.

⚠ WARNING

Appliances must be connected only to the type of gas specified on the rating plate.

RATING PLATE - The information on the rating plate defines the model, serial number, gas type (natural or liquid propane), operating pressures and burner BTU Ratings. Keep this information for future reference. It is essential for proper identification of the unit when requesting additional information or factory support. The Range series ships with two rating labels. One inside the Toe kick panel and the second label on the rear panel. Countertops rating label is located on the right-side rear corner.

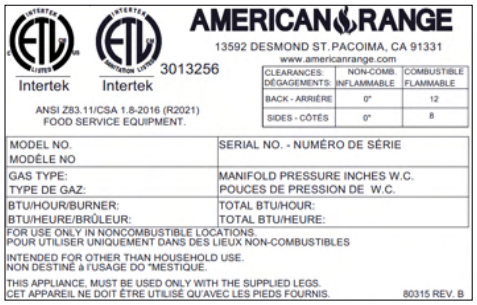
AMERICAN RANGE
13592 DESMOND ST. PACOIMA, CA 91331
www.americanrange.com
Intertek 3013256 Intertek

CLEARANCES: DÉGAGEMENTS:	NON-COMB. INFLAMMABLE	COMBUSTIBLE FLAMMABLE
BACK - ARRIÈRE	0"	12
SIDES - CÔTÉS	0"	8

ANSI Z83.11/CSA 1.8-2016 (R2021)
FOOD SERVICE EQUIPMENT.

MODEL NO. MODÈLE NO	SERIAL NO. - NUMÉRO DE SÉRIE
GAS TYPE: TYPE DE GAZ:	MANIFOLD PRESSURE INCHES W.C. POUCES DE PRESSION DE W.C.
BTU/HOUR/BURNER: BTU/HEURE/BRÛLEUR:	TOTAL BTU/HOUR: TOTAL BTU/HEURE:

FOR USE ONLY IN NONCOMBUSTIBLE LOCATIONS.
POUR UTILISER UNIQUEMENT DANS DES LIEUX NON-COMBUSTIBLES
INTENDED FOR OTHER THAN HOUSEHOLD USE.
NON DESTINÉ à l'USAGE DO "MESTIQUE.
THIS APPLIANCE, MUST BE USED ONLY WITH THE SUPPLIED LEGS.
CET APPAREIL NE DOIT ÊTRE UTILISÉ QU'AVEC LES PIEDS FOURNIS. 80315 REV. B

Ranges Rating Label Located inside the Toe kick panel

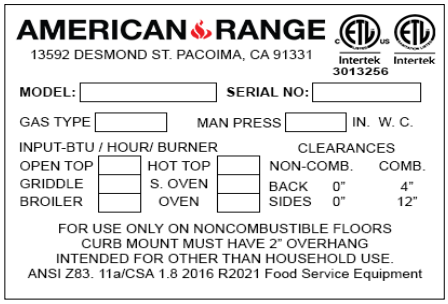
AMERICAN RANGE
13592 DESMOND ST. PACOIMA, CA 91331
Intertek 3013256 Intertek

MODEL: SERIAL NO:
GAS TYPE MAN PRESS IN. W. C.
INPUT-BTU / HOUR/ BURNER
OPEN TOP HOT TOP
GRIDDLE S. OVEN
BROILER OVEN

CLEARANCES	NON-COMB.	COMB.
BACK	0"	4"
SIDES	0"	12"

FOR USE ONLY ON NONCOMBUSTIBLE FLOORS
CURB MOUNT MUST HAVE 2" OVERHANG
INTENDED FOR OTHER THAN HOUSEHOLD USE.
ANSI Z83. 11a/CSA 1.8 2016 R2021 Food Service Equipment

Countertops Rating Label Located on right side rear corner

INSTALLATION – ELECTRIC UTILITY CONNECTIONS – STANDARDS AND CODES

ELECTRICAL CONNECTION – The standard gas operated Ranges and Hot Plates does not require an electrical service connection for operation. The unit is not supplied with a power cord. The installation instructions contained here are for the use of qualified installation and service personnel only. Installation or service by other than qualified personnel will void the warranty and may result in damage to the broiler and/or injury to the operator.

Qualified installation personnel, licensed and bonded, must be experienced in such work, familiar with all precautions required and have complied with all requirements of state or local authorities having jurisdiction.

The ventilation of these Ranges and Hot Plates should be in accordance with local codes. In absence of local codes, refer to the national ventilation code titled, Standard for the Installation of Equipment for the Removal of Smoke and Grease Laden Vapors from Commercial Cooking Equipment, NFPA-96 – Latest Edition.

GENERAL EXPORT INSTALLATIONS – Installation must conform to Local and National Standards. Local installation codes and/or requirements may vary. If you have any questions regarding the proper installation or operation of your American Range Commercial Countertop Range top, please contact your local distributor. If you do not have a local distributor, contact American Range Corporation at 1.888.753.9898 or visit us at www.americanrange.com

⚠ WARNING

ELECTRICAL GROUNDING INSTRUCTIONS

The appliance is equipped with a three-prong (grounding) plug for your protection against electrical shock hazard and should be plugged directly into a properly grounded three-prong receptacle. Do not cut or remove the grounding prong from the plug.

For gas fired 120 VAC units and any NEC compliant receptacle, proper ground and correct polarity is required.

Electric convection Ranges are configured at the factory for operation from 208 VAC, single phase, or 208 VAC, three-phase electrical service is also an available configuration.

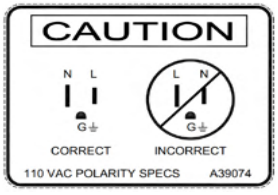

⚠ WARNING

No attempt should be made to operate this appliance during an electrical service failure or in the event of a prolonged power failure. The appliance is not capable of operation without specified gas and electric requirements.

INSTALLATION

When an appliance is equipped with casters, instructions that: the installation shall be made with a connector that complies with the Standard for Connectors for Movable Gas Appliances, ANSI Z21.69 • CSA 6.16, and a quick disconnect device that complies with the Standard for Quick-Disconnect Devices for Use With Gas Fuel, ANSI Z21.41 • CAS 6.9; adequate means must be provided to limit the movement of the appliance without depending on the connector and the quick-disconnect device or its associated piping to limit the appliance movement; and the location(s) where the restraining device or its associated piping to limit the appliance movement: and the locations(s) where the restraining means may be attached to the appliance shall be specified.

When an appliance is supplied on casters and is connected to the supply piping by means of a connector for movable appliances, a statement making the operator aware there is a restraint on the appliance and, If disconnection of the restraint is necessary, to reconnect this restraint after the appliance has been returned to its originally installed position.

RANGES WITH CASTERS

In order to be able to service this appliance, it must be installed with the locking front casters, a flexible connector complying with ANSI Z21.69.CGA6.16 and a quick disconnect device complying with ANSI Z21.41CGA 6.9. Adequate means must be provided to limit the movement of the appliance without depending on the connector and the quick disconnect device or its associated piping to limit the appliance's movement.

RESTRAINING DEVICE

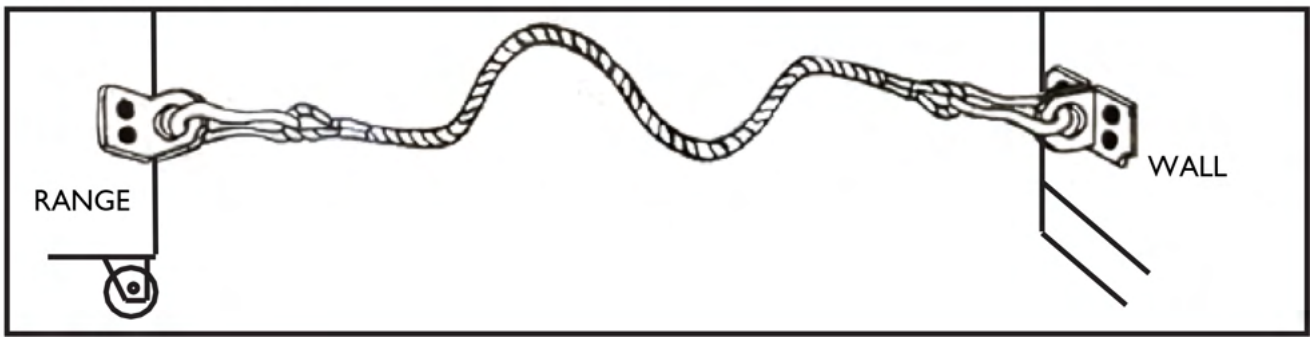

If the kitchen floor is relatively smooth and level, the unit may be leveled by turning the "foot" section of the leg, since casters are not adjustable. Identify the high corner and level the unit if the adjustment required exceeds the 1-1/4" limit use metal shims.

⚠ CAUTION When lighting the gas Range or Hot Plate, **DO NOT** stand with your face close to the combustion chamber.

All American Range Corporation appliances are adjusted and tested before leaving the factory, effectively matching them to appropriate atmospheric conditions. We recommend that adjustments and calibrations are performed upon installation to assure proper operation of the unit and avoid possible problems caused by rough handling or vibration during shipment. This work must be performed only by qualified service personnel. These adjustments are the responsibility of the customer and/or dealer and are not covered by warranty.

Check all gas connections for leaks with a soapy water solution before lighting the Range or Hot Plate. DO NOT USE AN OPEN FLAME TO CHECK FOR LEAKS! Putting an open flame beside a new gas connection is extremely dangerous and may result in serious injury or death.

⚠ CAUTION When lighting the gas oven, **DO NOT** stand with your face close to the combustion chamber.

All American Range Corporation appliances are adjusted and tested before leaving the factory, effectively matching them to appropriate atmospheric conditions. We recommend that adjustments and calibrations are performed upon installation to assure proper operation of the unit and avoid possible problems caused by rough handling or vibration during shipment. This work must be performed only by qualified service personnel. These adjustments are the responsibility of the customer and/or dealer and are not covered by warranty.

Check all gas connections for leaks with a soapy water solution before lighting the Range or Countertop. DO NOT USE AN OPEN FLAME TO CHECK FOR LEAKS! Putting an open flame beside a new gas connection is extremely dangerous and may result in serious injury or death.

13592 Desmond St Pacoima CA 91331
T. 818.897.0808 Toll Free: 888.753.9898
www.AmericanRange.com

INSTALLATION

Before lighting, check all joints in the gas supply line for leaks. DO NOT USE OPEN FLAME TO CHECK FOR LEAKS! Use soap and water solution. Before lighting any pilots, make sure the burner valves and thermostats are turned "off."

TO CHECK FOR GAS LEAKS USING A SOAPY WATER SOLUTION

1. Turn pilot valves to OFF position by turning adjustment screws clockwise.
2. Turn ON the manual gas valve at the inlet side of the gas supply line.
3. Check for gas leaks at the flexible coupling or gas connector fitting using a solution of one part soap and three parts water.
4. Sparingly spray or brush the soapy solution at the gas fittings; active bubbling indicates location of gas leak.
5. If a gas leak is detected turn off the manual gas valve at the inlet side of the gas line. Call your certified and licensed service technician.

OPEN BURNER / GRIDDLE / RAISED GRIDDLE-BROILER

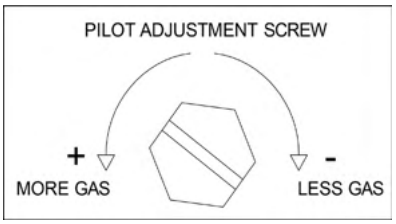

1. Turn pilot adjustment screw counterclockwise, then light standing pilot and adjust flame 1/4" high.
2. Turn ON gas valves to light main burners.
3. For complete shutdown, shut-off gas valves and turn pilot adjustment screw clockwise to shut-off gas to the pilots.

OVEN

1. Turn the thermostat to the OFF position.
2. Wait five minutes.
3. Access the burner compartment by lifting the kickplate and rotating forward to expose the safety valve.
4. Push in and hold the safety valve button at the bottom of the oven.
5. Light the pilot by repeatedly pressing the piezo electric ignition button; keep safety valve button pressed in until the pilot stays lit when released.
6. If the pilot goes out repeat steps 2 to 5.
7. Set the thermostat to desired temperature.
8. Turn the thermostat to the OFF position for complete shut down; shut-off main gas valve.

LIGHTING INSTRUCTIONS FOR GAS FIRED INNOVECTION® AND CONVECTION RANGES

1. Before attempting to light this appliance, the cover, if so equipped should be open.
2. Turn OFF the manual gas valve located at the outlet side of the gas supply line.
3. Turn the manual gas supply valve to the OFF position.
4. Set the thermostat to the OFF position.
5. Press the power switch to the OFF position.
6. Wait five minutes.
7. This appliance is equipped with an automatic spark ignition device which automatically lights the burner. Do not try to light the burner with a match.
8. Turn the manual gas supply valve to the ON position.
9. Press the power switch to the COOK position.
10. Set the thermostat to the desired temperature. The direct spark ignitor will light the burner. If the burner does not light, go back to steps 2 to 9 above and repeat the process. If the problem persists, call your factory personnel.
11. The cover, if so equipped, should be placed in the closed position.
12. If a gas odor is detected, turn off the gas valve and follow lighting instructions beginning from step 1.

TO SHUT DOWN THE GAS

FIRED INNOVECTION® AND CONVECTION RANGES

1. Set the thermostat to the OFF position.
2. Press the power switch to the OFF position.
3. Turn the manual gas supply valve to the OFF position.

FINAL PREPARATION

On initial installation, turn the oven thermostat to 250°F and operate the unit for about one hour, then reset the thermostat to its maximum temperature and operate the unit for an additional hour. This will drive off any manufacturing oils remaining in the unit. Let the unit cool, then thoroughly clean interior surfaces using hot soapy water.

TYPICAL MODEL AND PARTS IDENTIFICATION

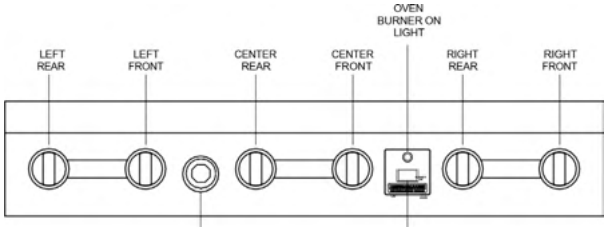

OVEN THERMOSTAVECTION / INNOVECTION

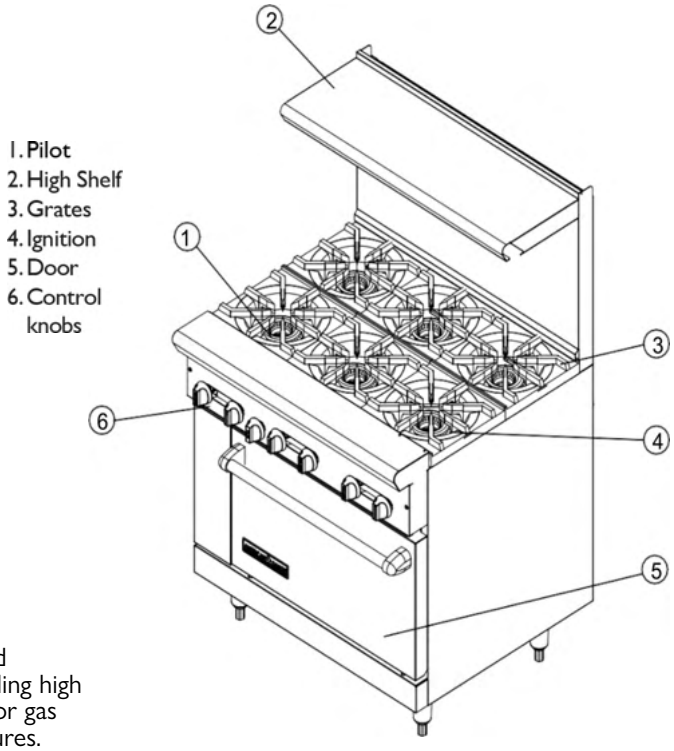

NOTE:

If a Salamander Broiler/Cheesemelter is to be mounted on the Range, read installation instructions for Salamander Broiler/Cheesemelter before installing high shelf. Special care must be taken to ensure that the gas supply piping and/or gas pressure regulator is not exposed to exhaust gases, or elevated temperatures.

HIGH SHELF INSTALLATION

CLEARANCES			
NON-COMBUSTIBLE WALLS		COMBUSTIBLE WALLS	
Rear	Sides	Rear	Sides
0"	0"	4"	12"

For installation on a non-combustible floor only.

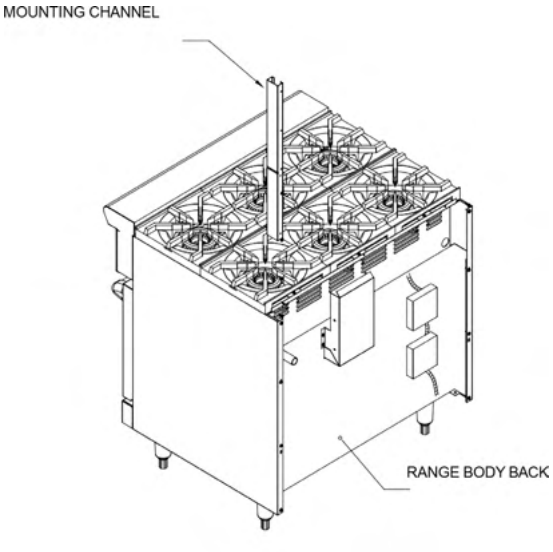

REAR VIEW SHOWN

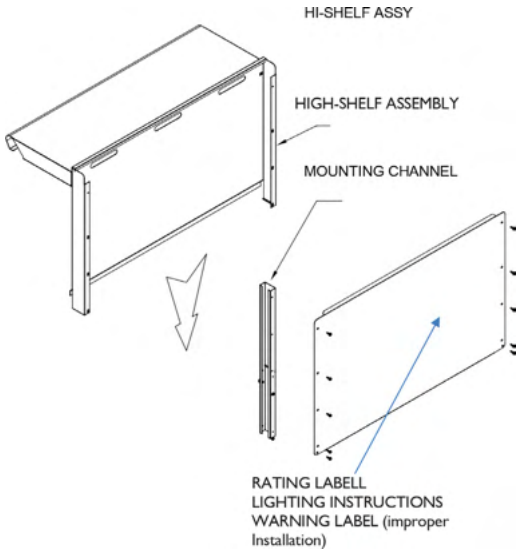

1. Install the 2 mounting channels onto range.
2. Slide in front high riser panel.
3. Attach rear high riser panel behind the front high riser panel and fasten with sheet metal screws.
4. Attach the shelf onto high riser.

INSTALLATION

CLEARANCES			
NON-COMBUSTIBLE WALLS		COMBUSTIBLE WALLS	
Rear	Sides	Rear	Sides
0"	0"	7"	8"

For installation on a non-combustible floor only.

1. Pilot
2. Back Riser
3. Grates
4. Ignition
5. Legs
6. Control Knobs

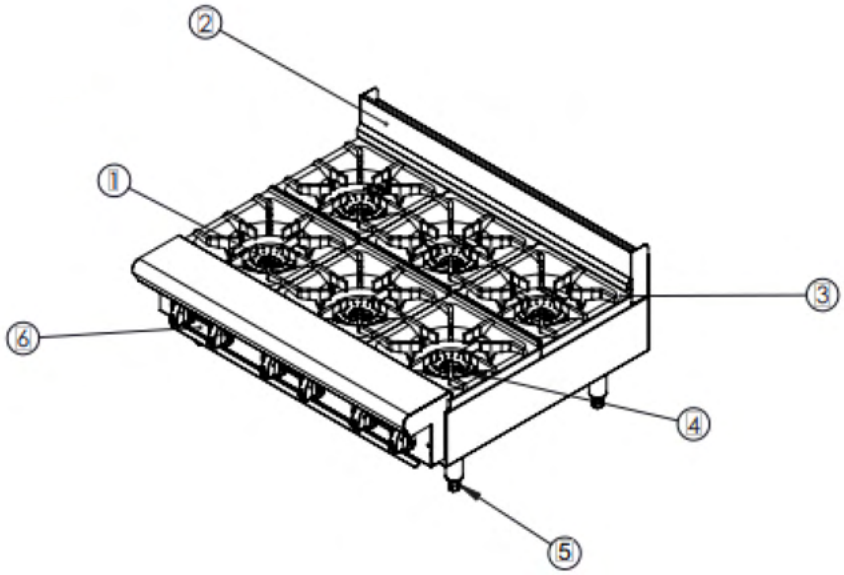

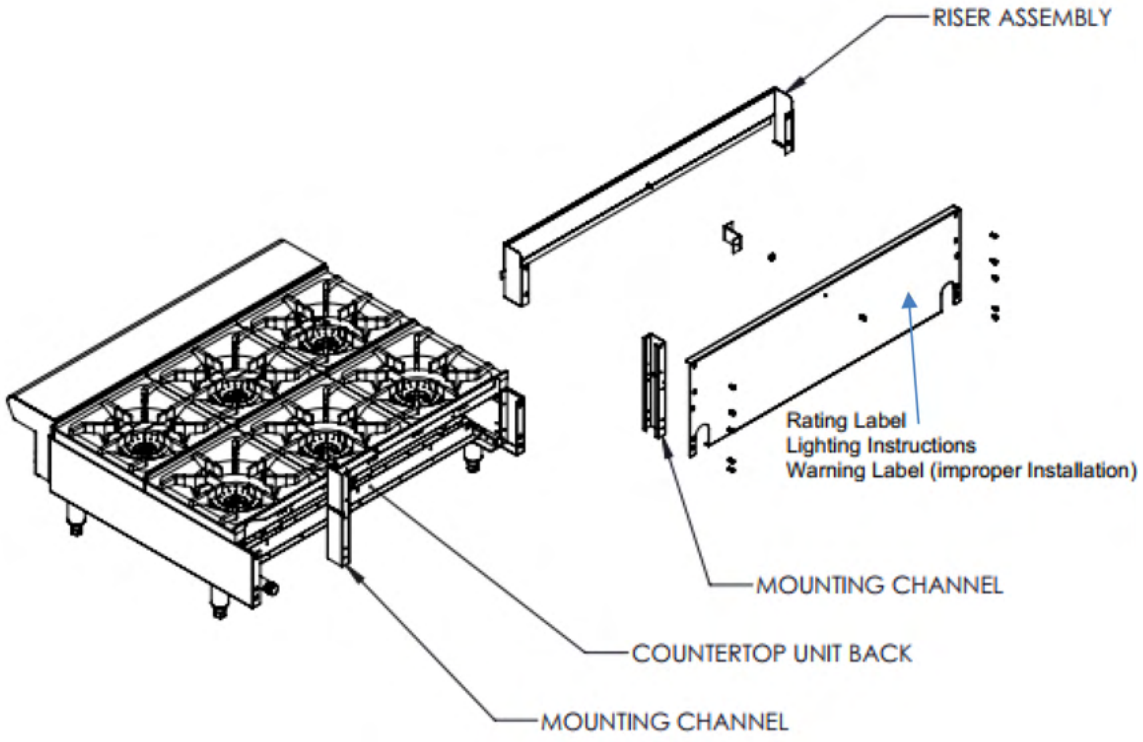

DESIGNED & BUILT IN USA
PROFESSIONAL COOKING EQUIPMENT

AMERICAN RANGE
A HATCO COMPANY

13592 Desmond St Pacoima CA 91331
T. 818.897.0808 Toll Free: 888.753.9898
www.AmericanRange.com

MAINTENANCE

MAINTENANCE

RAISED GRIDDLE/ BROILER-GRIDDLE

Daily:

1. Season prior to use. To season, pour a small amount of cooking oil (1 ounce / sq. ft. or 28g / .1 sq. meter of surface) over the top. With a cloth, spread oil over the entire surface to create a thin film. Wipe off any excess oil with a cloth. Turn the burner on very low and allow the oil burn off. Repeat the procedure three times before regular use.
2. Remove and empty grease pan. Clean thoroughly and replace.
3. Remove rack and grease pans. Clean with soap and water.
4. Wipe the inside clean.
5. Clean griddle plate with warm, soapy water. Rinse with warm water.
6. Turn griddle on and rinse again with warm water to boil-out any soap left at the edges of the griddle plate.
7. Repeat step one after cleaning process.

OVEN

Daily:

1. Cool down
2. Wipe clean the inside of the oven.
3. Remove oven racks and clean with soap and water.
4. Remove rack guides (convection oven) and clean.

Periodic:

1. Check the rear flue way and clean if any debris exists.

OPEN TOP- BURNERS

Daily:

1. Clean cast iron top grates with a mild soap and water solution.
2. Rinse and dry with a clean towel and apply cooking oil to prevent rusting.
3. After seasoning, replace grates onto the range.
4. Season the open top grates after each cleaning. Failure to season grates will cause grates to rust.
5. Check valves for operation and cleaning.

STAINLESS STEEL PARTS – Do not use steel wool, abrasive cloths, cleansers, or powders to clean stainless-steel surfaces. All stainless steel parts should be wiped regularly with hot soapy water during the day and a stainless steel liquid cleaner at the end of the day. To remove encrusted materials, soak in hot water to loosen the material, then use a wood or nylon scraper. Contact the factory, a factory representative or a local service company to perform maintenance and repairs.

MAINTENANCE SUMMARY – (INNOVECTION® AND CONVECTION OVEN)

1. Never attempt to run the range with the motor off.
2. Cool down after cooking is finished.
3. Periodically lubricate the pivot pins of the oven door hinge. Use a multi-purpose lubricating oil sparingly.
4. The door chain assembly and door bushing must be inspected periodically and adjusted or replaced to ensure satisfactory operation of doors.
5. Clean the burner air shutter and burner chamber. Remove any accumulation of debris by hand.
6. Check blower wheel for any accumulation of debris. Remove by hand, do not use any tools.
7. Replace burned out light bulbs.
8. Excessive use will result in excessive wear and tear.

Do not pressure wash any portion of the range.

⚠ CAUTION Never use ammonia in an oven that is warmer than room temperature and always have direct ventilation.

⚠ WARNING Always disconnect the eelctrical power service before cleaning or servicing the range.

DESIGNED & BUILT IN USA
PROFESSIONAL COOKING EQUIPMENT

A70802 RevA 11012024

AMERICAN RANGE
A HATCO COMPANY

13592 Desmond St Pacoima CA 91331
T. 818.897.0808 Toll Free: 888.753.9898
www.AmericanRange.com

TROUBLESHOOTING GUIDE

POSSIBLE CAUSE	SUGGESTED ACTION
SYMPTOM: Heating Element does not come on.	
Unit is not connected to gas or electrical service	Visually check unit is connected to gas or electrical service
Thermostat is set to very low temperature	Set temperature to desired value
SYMPTOM: Oven does not reach selected temperature.	
May not have been on long enough	Unit preheats to 350°F in about fifteen minutes
Thermostat may be defective	Unit will require service
Too little gas pressure, dirty gas line	Call for authorized service
SYMPTOM: Innovection fan or Convection fan does not operate.	
Unit is not connected to electrical service	Visually check unit is wired to electrical service
Power switch is off	Move switch to ON position
Circuit breaker is tripped	Reset the breaker, observe operation
SYMPTOM: General baking problems.	
Unit set to "standard" bake temperature	Set unit to "lower" convection bake temperature, operate for shorter time
Thermostat out of calibration	Unit will require service

13592 Desmond St Pacoima CA 91331
T. 818.897.0808 Toll Free: 888.753.9898
www.AmericanRange.com

COMMERCIAL WARRANTY

Last Updated: August 22, 2023

LIMITED WARRANTY; EXCLUSIVE REMEDY: THIS LIMITED WARRANTY GIVES THE PERSON OR ENTITY BUYING THE PRODUCTS (DEFINED BELOW) DIRECTLY FROM SELLER (DEFINED BELOW) (SUCH PERSON OR ENTITY, "CUSTOMER") SPECIFIC LEGAL RIGHTS AND CUSTOMER MAY ALSO HAVE OTHER RIGHTS, WHICH VARY FROM STATE TO STATE. American Range Corporation ("Seller") warrants its products (the "Products") to be free from defects in material and workmanship under normal use and service and when stored, maintained, and installed in strict accordance with factory recommendations. Seller's sole obligation to Customer under this warranty is the repair or replacement by Seller or a Seller-authorized service agency, at Seller's option, of any Product or any part thereof deemed defective upon Seller's examination, for a period of: (i) if Customer or any end-user customer is an individual consumer (a "Consumer"), the Warranty Duration from the date of delivery of the Products to Customer or such end-user customer, (ii) if Customer is not a Consumer, the Warranty Duration from the date of manufacture of the Products, and (iii) if any end-user customer is not a Consumer, the Warranty Duration from the date of purchase of the Products by such end- user customer from Seller's Distributor/Dealer, not to exceed (30) months from date of manufacture. A Consumer MUST provide proof of purchase of the Products from Seller or Seller's Distributor/Dealer, including the delivery date, to a Seller authorized service agency. If no product invoice or product registration is provided showing the date of delivery of the Products to a Consumer, Seller warrants the Products to be free from defects in material and workmanship for the Warranty Duration effective from the date of purchase by Consumer. A Customer or end-user customer that is not a Consumer MUST provide proof of purchase of the Products from Seller or Seller's Distributor/Dealer to a Seller authorized service agency. If no product invoice or product registration is provided showing the date of purchase of the Products to a Customer or end-user customer that is not a Consumer, Seller warrants the Products to be free from defects in material and workmanship for the Warranty Duration effective from the date of manufacture of the Products.

The "Warranty Duration" shall mean the specific periods and coverages set forth below for specific Product components, or, to the extent not listed below, twenty-four (24) months. Credit for Products or parts returned with the prior written permission of Seller will be subject to the terms shown on Seller's material return authorization form. PRODUCTS OR PARTS RETURNED WITHOUT PRIOR WRITTEN PERMISSION OF SELLER WILL NOT BE ACCEPTED FOR CREDIT. Expenses incurred by Customer or any end-user customer in returning, replacing or removing the Products will not be reimbursed by Seller. If the defect comes under the terms of this limited warranty, the Products will be repaired or replaced and returned to the Customer and the cost of return freight will be paid by Seller. The remedy of repair or replacement provided for herein is Customer's and any end-user customer's exclusive remedy. Any improper use, alteration, repairs, tampering, misapplication, improper installation, application of improper voltage or any other action or inaction by Customer, an end-user customer or others (including the use of any unauthorized service agency) that in Seller's sole judgment adversely affects the Product shall void this warranty. The warranty expressly provided herein may only be asserted by Customer and may not be asserted by Customer's customers or other users of the Products; provided, however, that if Customer is an authorized equipment dealer of Seller, Customer may assign the warranty herein to Customer's customers, subject to all of the limitations of these Terms, and in such case, the warranty shall be exclusively controlled by Seller in accordance with these Terms.

The Warranty Duration for broiler burners', lower and upper grates and radiants is 90 days.
The Warranty Duration for replacement parts is 90 days.

TO THE EXTENT NOT PROHIBITED BY LAW, THIS LIMITED WARRANTY IS EXCLUSIVE AND IS IN LIEU OF ANY OTHER WARRANTY, EXPRESSED OR IMPLIED, INCLUDING BUT NOT LIMITED TO ANY IMPLIED WARRANTY OF NONINFRINGEMENT, MERCHANTABILITY OR FITNESS FOR A PARTICULAR PURPOSE, WHICH ARE EXPRESSLY DISCLAIMED.

THE FOLLOWING PARAGRAPH SHALL APPLY ONLY IF YOU ARE AN INDIVIDUAL CONSUMER: THE DISCLAIMERS OF IMPLIED WARRANTIES DISCUSSED ABOVE DO NOT APPLY TO YOU. HOWEVER, TO THE EXTENT NOT PROHIBITED BY LAW, WE LIMIT THE DURATION AND REMEDIES OF ALL IMPLIED WARRANTIES, INCLUDING WITHOUT LIMITATION THE WARRANTIES OF MERCHANTABILITY AND FITNESS FOR A PARTICULAR PURPOSE, TO THE DURATION OF ONE YEAR STARTING ON THE DATE OF DELIVERY OF YOUR PRODUCTS TO YOU. THE LIMITED WARRANTY DURATION IS NOT EXTENDED IF WE REPAIR OR REPLACE A WARRANTED PRODUCT. SELLER MAY CHANGE THE AVAILABILITY OF THIS LIMITED WARRANTY AT SELLER'S DISCRETION, BUT ANY CHANGES WILL NOT BE RETROACTIVE. SOME STATES DO NOT ALLOW LIMITATIONS ON HOW LONG AN IMPLIED WARRANTY LASTS, SO THE ABOVE LIMITATION MAY NOT APPLY TO YOU. NEITHER ANY PERFORMANCE OR OTHER CONDUCT, NOR ANY ORAL OR WRITTEN INFORMATION, STATEMENT OR ADVICE PROVIDED BY SELLER OR ANY OF SELLER'S SUPPLIERS, AGENTS OR EMPLOYEES WILL CREATE A WARRANTY, OR IN ANY WAY INCREASE THE SCOPE OR DURATION OF THIS LIMITED WARRANTY.

LIMITATIONS and EXCLUSIONS: This limited warranty is non-transferable and is limited to the following Products: ranges, counter hot plates, griddles, char-broilers, teppanyaki griddles, over-fired salamander broilers, cheesemelters, custom combo ranges, convection ovens, and counter equipment. Products purchased and installed for use outside the continental United States are excluded from this limited warranty. In addition, notwithstanding anything herein to the contrary, this limited warranty does not cover any product which has been modified by unauthorized personnel or changed from its original design, nor normal parts wear and tear and maintenance. Additionally, notwithstanding anything herein to the contrary, the limited warranty herein will not cover components in Seller's sole discretion such as, but not limited to, the following: coated incandescent light bulbs, fluorescent lights, heat lamp bulbs, coated halogen light bulbs, halogen heat lamp bulbs, xenon light bulbs, LED lights, porcelain components, glass components, thermostats, tubes, glass components, fuses, or Product or part product failure in booster tanks, fin tube heat exchangers, or other water heating equipment caused by liming, sediment buildup, chemical attack, or freezing.

WARRANTY REGISTRATION INSTRUCTIONS: Product registration must be submitted within 90 days from the date of shipment from our factory to qualify for additional coverage. Registration may be submitted through the form on this webpage, through the form accessible through the QR code on the Product (where available), or by calling our Customer Service with the required information at Phone (818) 897-0808 Monday-Friday, 7:00 am – 4:30 pm PST.
See our full **Terms of Sale** at: [https://www.americanrange.com/terms-of-sale]

DESIGNED & BUILT IN USA
PROFESSIONAL COOKING EQUIPMENT

AMERICAN RANGE
A HATCO COMPANY

13592 Desmond St Pacoima CA 91331
T. 818.897.0808 Toll Free: 888.753.9898
www.AmericanRange.com

INSTALLATION CHECKLIST

REGISTRATION CARD
TO VALIDATE YOUR WARRANTY,
YOU MUST MAIL, EMAIL OR REGISTER ONLINE
WITH A COPY OF YOUR RECEIPT TO:

AMERICAN RANGE CUSTOMER SERVICE,
13592 DESMOND STREET, PACOIMA, CA 91331
EMAIL: service@americanrange.com

REGISTER ONLINE AT
https://www.americanrange.com/warranty-registration/

Model Number: _____ *
Serial Number: _____ *
Gas Type: _____ *
Electrical Information: _____ *
Purchase Date: _____
Dealer: _____

Installation Date: _____
Installation Company: _____
Installation Rep's Name: _____
Installer's Address: _____
Installer's Phone: _____

* *As specified on appliance Rating Plate – see page 4 for reference.*

WARRANTY REQUIREMENT

For reliable operation and for your own safety, this professional cooking equipment must be installed by a certified/licensed contractor.

Failure to comply will void any written or implied warranty.

In the event the equipment requires service during the standard warranty period, the receipt proving certified installation must be made available to American Range for verification.

If installation was not performed by a certified/licensed contractor, be prepared to submit a major credit card for payment for proper installation prior to service.

© 2024 American Range All Rights Reserved

13592 Desmond St Pacoima CA 91331
T. 818.897.0808 Toll Free: 888.753.9898
www.AmericanRange.com