CATALOG OF REPLACEMENT PARTS



OV210 ELECTRIC RACK OVENS

ML-132112	OV210E-M1B
ML-132114	OV210E-M2B

A product of BAXTER MFG. CO., INC. 19220 STATE ROUTE 162 EAST, ORTING, WA 98360

FORM 43046 Rev. B (January 2015)

 © BAXTER MFG. 2015

Table of Contents

5 EXTERIOR UNIT (M1B RACK OVEN)
7 EXTERIOR UNIT (M2B RACK OVEN)
9 DOOR ASSEMBLY (M1B RACK OVEN)
11 DOOR ASSEMBLY (M2B RACK OVEN)
13 VENTS AND GLASS PANELS
15 BLOWER AND PANELS (M1B RACK OVENS)
17 BLOWER AND PANELS (M2B RACK OVEN)
19 LIFTER/ROTATOR
21 WATER AND ELECTRIC SUPPLY
23 ELECTRICAL COMPONENT PANELS
25 DIGITAL DOOR CONTROL ASSEMBLY
27 AUTO DOOR CONTROL ASSEMBLY
29 POWER VENT ASSEMBLY

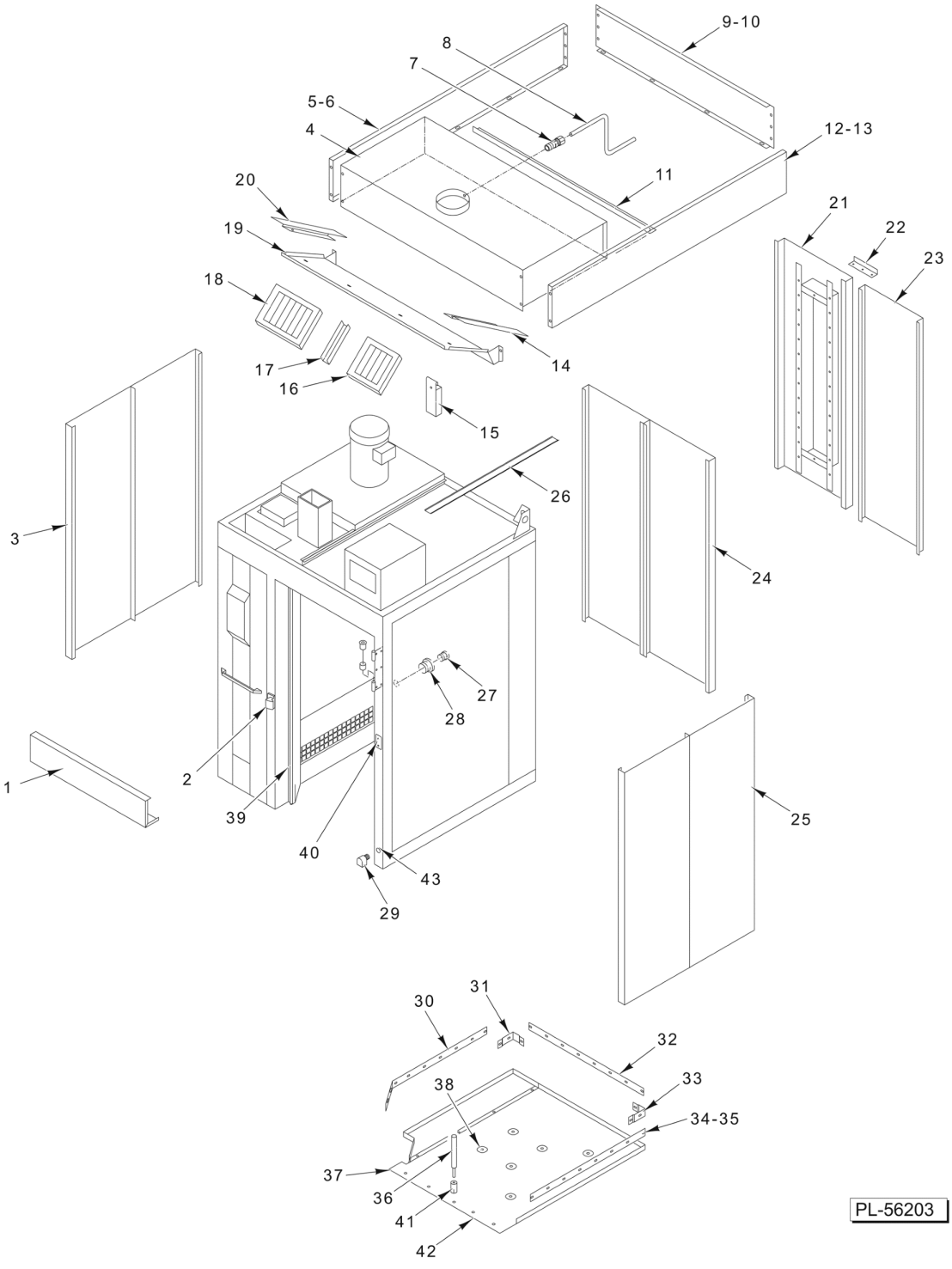

EXTERIOR UNIT
(M1B RACK OVEN)

EXTERIOR UNIT
(M1B RACK OVEN)

ILLUS. PL-56203	PART NO.	NAME OF PART	AMT.
1	01-1M3236-00001	Strike - Chrome Plated	1
2	01-1M2164-0001A	Skin - Outer Header	1
3	01-1M5672-00005	Skin - Outer	2
4		Hood Assy. (Contact Product Service for Part Number)	1
5	01-1M5351-00001	Trim - Side Hood (Ovens Built On or Before 5/1/07)	1
6	01-1M5945-00001	Trim - Hood Single (Ovens Built On or After 5/2/07)	1
7	FP-078-49	Fitting - Tube (1/4 In.) (Brass)	1
8	01-100V17-00004	Tube 1/4 O.D. x 72 In. Lg. (Alum.) (Sold Per Inch)	AR
9	01-1M5352-00001	Trim - Rear Hood (Ovens Built On or Before 5/1/07)	1
10	01-1M5945-00001	Trim - Hood Single (Ovens Built On or After 5/2/07)	1
11	01-1M2341-00001	Trim - Angle Hood	1
12	01-1M5351-00001	Trim - Side Hood (Ovens Built On or Before 5/1/07)	1
13	01-1M5945-00001	Trim - Hood Single (Ovens Built On or After 5/2/07)	1
14	01-1M2761-00002	Extender (LH)	1
15	01-1M3032-00001	Cup - Hood Grease	1
16	01-100V18-00089	Filter - Hood (16 x 20) (With Drop)	1
17	01-1M2247-00001	Filler - Filter	1
18	01-100V18-00088	Filter - Hood (16 x 16) (With Drop)	2
19	01-1M2491-00001	Deflector - Air Hood	1
20	01-1M2761-00001	Extender (RH)	1
21	01-1M2408-00001	Angle - Rear Window Trim (Optional Part)	2
22	01-1M2409-00001	Skin - Outer Wall (With Window Opening) (Optional Part)	1
23	01-1M2120-00005	Skin - Outer Wall (Optional Part)	1
24	01-1M5672-00005	Skin - Outer	2
25	01-1M5672-00005	Skin - Outer	2
26	01-1M2961-00002	Skin - Ceiling Outer (RH)	1
27	01-100V17-00259	Plug - Pipe 3/8 NPT (Brass)	1
28	01-100V17-00266	Bushing 3/8 NPT x 3/4 NPT (Brass)	1
29	01-100V17-00301	Ell 2-1/2 x 45 Deg. Blk	1
30	01-1M2072-00004	Trim - Floor	1
31	01-1M2071-00002	Joint - Corner Floor Trim	1
32	01-1M2072-00001	Trim - Floor	1
33	01-1M2071-00001	Joint - Corner Floor Trim	1
34	01-1M2072-00002	Trim - Floor	1
35	01-100V21-00073	Gasket - Red Silicone (Use With Items 30 thru 34)	AR
36	01-1000V4-0073A	Tool - Setting	1
37	01-1M2086-00001	Floor	1
38	01-1M2372-00001	Hold Down - Floor	4
39	01-100V21-00078	Gasket - Silicone (E-Shaped) (Sold Per Foot)	AR
40	01-1M1711-0003C	Plate - Front Cover	1
41	01-1000V4-00073	Anchor - Drop-In 1/4-20	9
42	01-1M2336-00001	Kit - Floor Extender (Apron)	1
43	01-1M2335-00001	Wheel (For Installation)	1
	01-1M2554-00001	Hardware Package	1

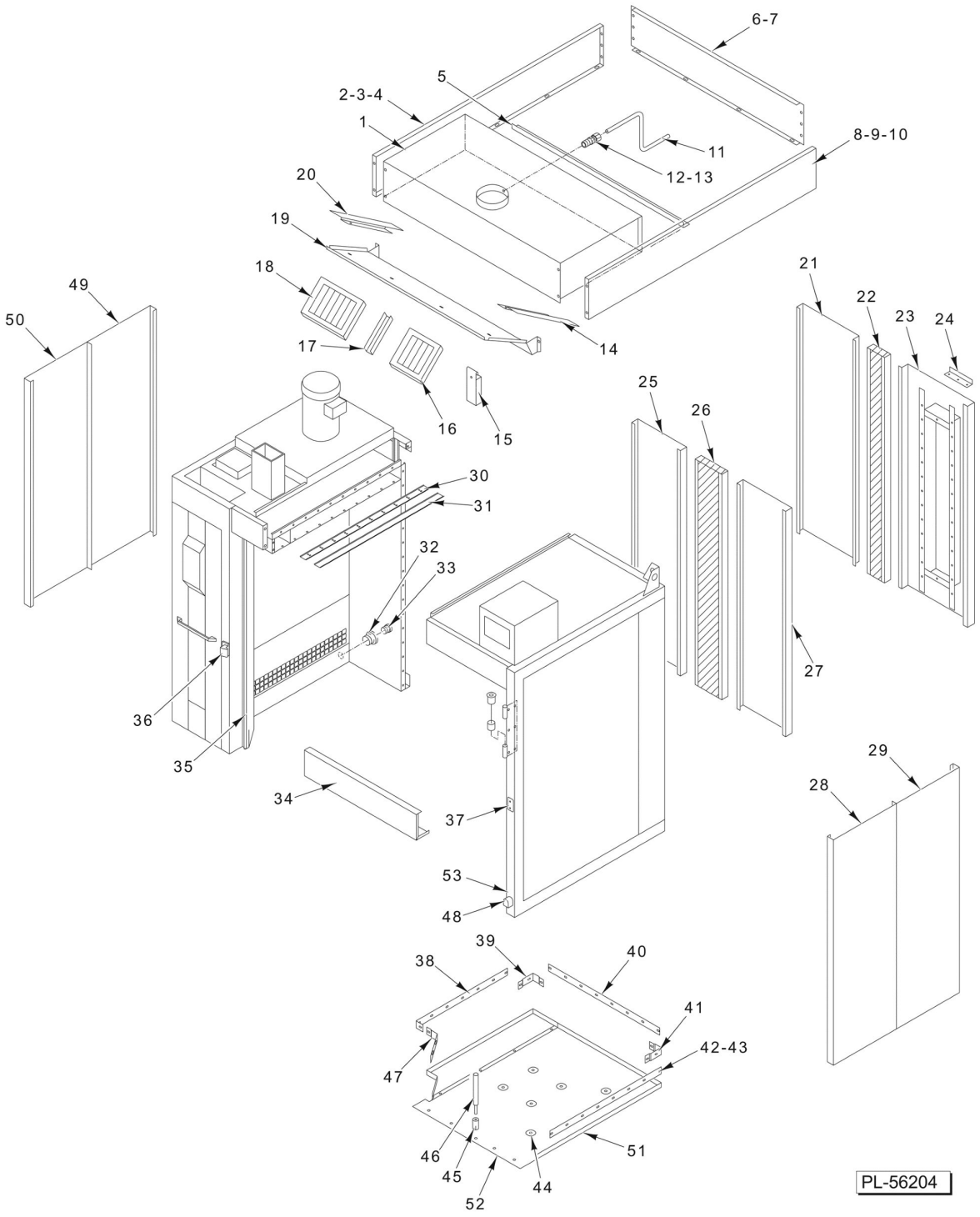

EXTERIOR UNIT
(M2B RACK OVEN)

EXTERIOR UNIT
(M2B RACK OVEN)

ILLUS. PL-56204	PART NO.	NAME OF PART	AMT.
1	01-1M5288-00002	Hood Assy	1
2	01-1M2383-00003	Trim - Side Hood (LH) (Ovens Built On or Before 6/01/03)	1
3	01-1M5351-00002	Trim - Side Hood (Ovens Built On or After 6/02/03)	1
4	01-1M5945-00002	Trim - Hood (Ovens Built On or After 5/01/07)	1
5	01-1M2341-00002	Angle - Hood Trim	1
6	01-1M5352-00002	Panel - Rear Hood (Ovens Built On or Before 5/01/07)	1
7	01-1M5945-00002	Trim - Hood (Ovens Built On or After 5/02/07)	1
8	01-1M2383-00003	Panel - Side Hood (RH) (Ovens Built On or Before 6/01/03)	1
9	01-1M5351-00002	Trim - Side Hood (Ovens Built On or After 6/02/03)	1
10	01-1M5945-00002	Trim - Hood (Ovens Built On or After 5/01/07)	1
11	01-100V17-00004	Tube 1/4 O.D. x 72 In. Lg. (Alum.) (Sold Per Inch)	AR
12	01-100V17-00280	Fitting - Compression (1/8 NPT) (Brass) (Previous Construction)	1
13	FP-078-49	Fitting - Tube (1/4 In.) (Brass) (Current Construction)	1
14	01-1M2761-00002	Extender (LH)	1
15	01-1M3022-00001	Cup - Hood Grease	1
16	01-100V18-00089	Filter - Hood (16 x 20) (With Drop)	1
17	01-1M2247-00002	Filler - Filter	1
18	01-100V18-00088	Filter - Hood (16 x 16) (With Drop)	2
19	01-1M2491-00002	Deflector - Air Hood	1
20	01-1M2761-00001	Extender (RH)	1
21	01-1M2120-00007	Skin - Outer Wall (Optional parts.)	1
22	01-1M2192-00006	Panel - Outer Wall (Optional parts.)	1
23	01-1M2409-00002	Skin - Outer Wall (W/ Window Opening) (Optional parts.)	1
24	01-1M2408-00001	Angle - Rear Window Trim (Optional Part)	2
25	01-1M2120-00004	Skin - Outer	1
26	01-1M5672-00005	Skin - Outer	1
27	01-1M2120-00004	Skin - Outer	1
28	01-1M2120-00011	Skin - Outer	1
29	01-1M2120-00012	Skin - Outer	1
30	01-1M2313-00001	Joint - Ceiling False	1
31	01-100V21-00056	Tape - Fiberglass (Optional Part)	5
32	01-100V17-00266	Bushing 3/8 NPT x 3/4 NPT (Brass)	1
33	01-100V17-00259	Plug - Pipe 3/8 NPT (Brass)	1
34	01-1M2164-0002A	Skin - Outer Header	1
*35	01-100V21-00078	Gasket - Silicone	17
36	01-1M3236-00001	Strike - Chrome Plated	1
37	01-1M1711-0003C	Plate - Front Cover	1
38	01-1M2072-00005	Trim - Floor	1
39	01-1M2071-00004	Joint - Corner Floor Trim	1
40	01-1M2072-00003	Trim - Floor	1
41	01-1M2071-00003	Joint - Corner Floor Trim	1
42	01-1M2072-00003	Trim - Floor	1
43	01-100V21-00073	Gasket - Red Silicone (Use With Items 38 thru 42)	AR
44	01-1M2372-00001	Hold Down - Floor	4
45	01-1000V4-00073	Anchor - Drop-In 1/4-20	9
46	01-1000V4-0073A	Tool - Setting	1
47	01-1M2072-00006	Trim - Floor	1
48	01-100V17-00301	Ell 2-1/2 x 45 Deg. Blk	1
49	01-1M2120-00011	Skin - Outer	1
50	01-1M2120-00012	Skin - Outer	1
51	01-1M2370-00001	Floor	1
52	01-1M2336-00002	Kit - Floor Extender (Apron)	1
53	01-1M2335-00001	Wheel (For Installation)	1
	01-1M2554-00002	Hardware Package	1

* (Sold Per Foot)

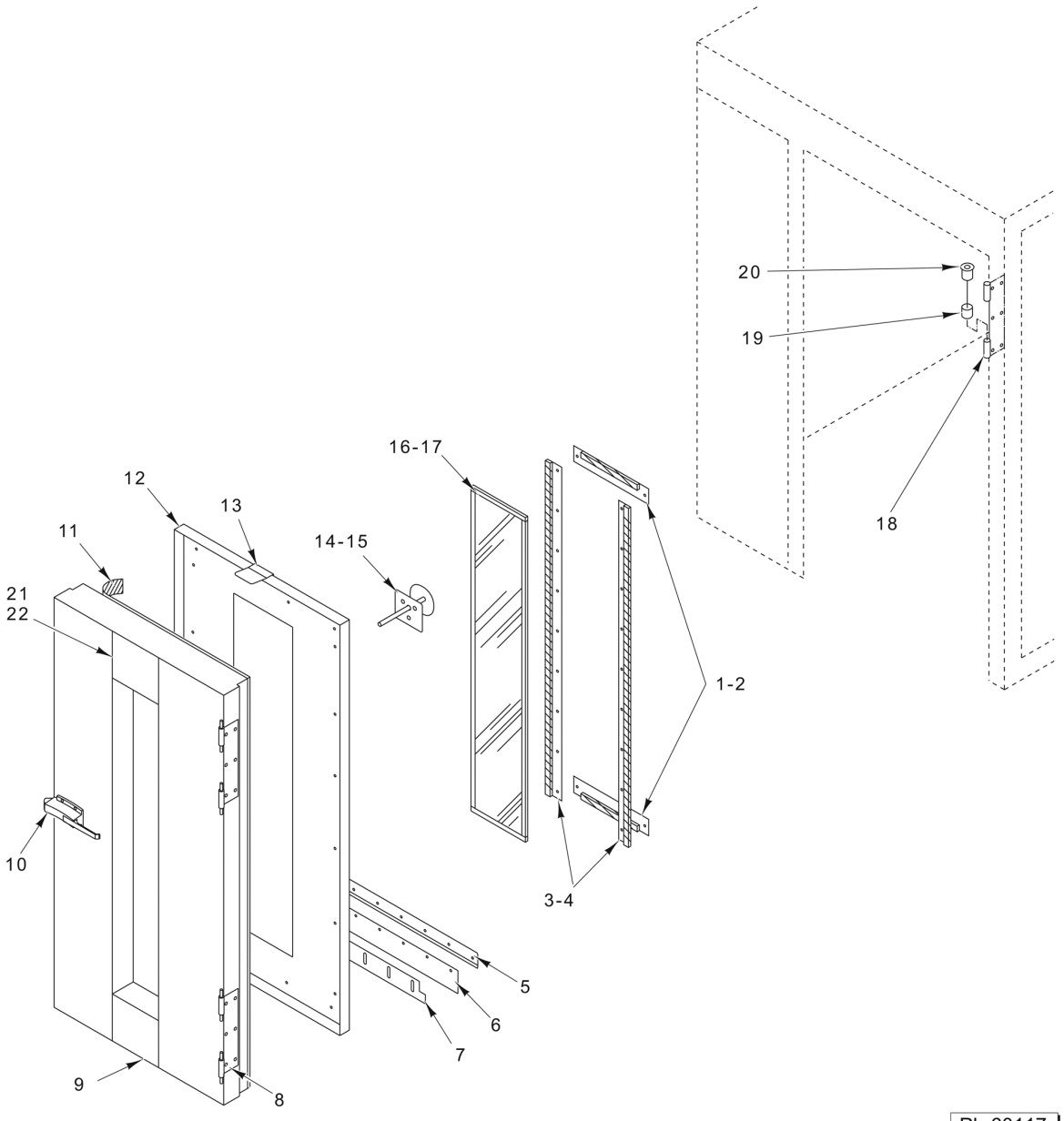

DOOR ASSEMBLY
(M1B RACK OVEN)

DOOR ASSEMBLY
(M1B RACK OVEN)

ILLUS. PL-60117	PART NO.	NAME OF PART	AMT.
1	01-1M2937-00002	Retainer - Window	2
1	01-1M3236-00001	Strike - Chrome Plated	1
2	01-100V21-0039A	Tape - Silicone (1/8 x 3/4) (Sold Per Inch)	26
2	01-1M2164-0001A	Skin - Outer Header	1
3	01-1M2937-00001	Retainer - Window	2
4	01-100V21-0039A	Tape - Silicone (1/8 x 3/4) (Sold Per Inch)	12
5	01-1M2255-00001	Clamp - Floor Sweep	1
6	01-1M2778-00001	Strip - Silicone Floor Seal	1
7	01-1M2769-00001	Support - Floor Seal	1
8	01-1M1738-00001	Hinge - Male Door	2
9	01-1M2133-00001	Weldment - Door	1
10	01-100V18-0120B	Handle - Chrome Plated	1
11	01-100V21-00065	Tape - Fiberglass (1/8 x 1) (Sold per Foot)	26
12	01-1M2135-00001	Skin - Inner Door	1
13	01-1M2254-00001	Guide - Door Switch Actuator	1
14	01-1M1435-00002	Handle - Interior Door	1
15	01-1000V1-00036	Ring - Retaining 7/16 In. (Zinc)	1
16	01-100V21-00060	Gasket - Silicone (Sold Per Ft.)	12
17	01-100V16-0102C	Glass - Oven Door	1
18	01-1M1739-00001	Hinge - Female Door	2
19	01-1000V0-00038	Bearing - Journal (Nylon)	4
20	01-1000V0-00031	Bearing - (Nylon) (W/Shoulder)	4
21	01-100V16-00197	Label - Black	2
22	01-100V16-0168C	Label - Caution	2
	01-1M5551-00001	Door Assy. (Incls. Items 1 thru 17) (Packaged for Domestic)	1
	01-1M2469-00008	Door Assy. (Incls. Items 1 thru 17) (Packaged for Export)	1

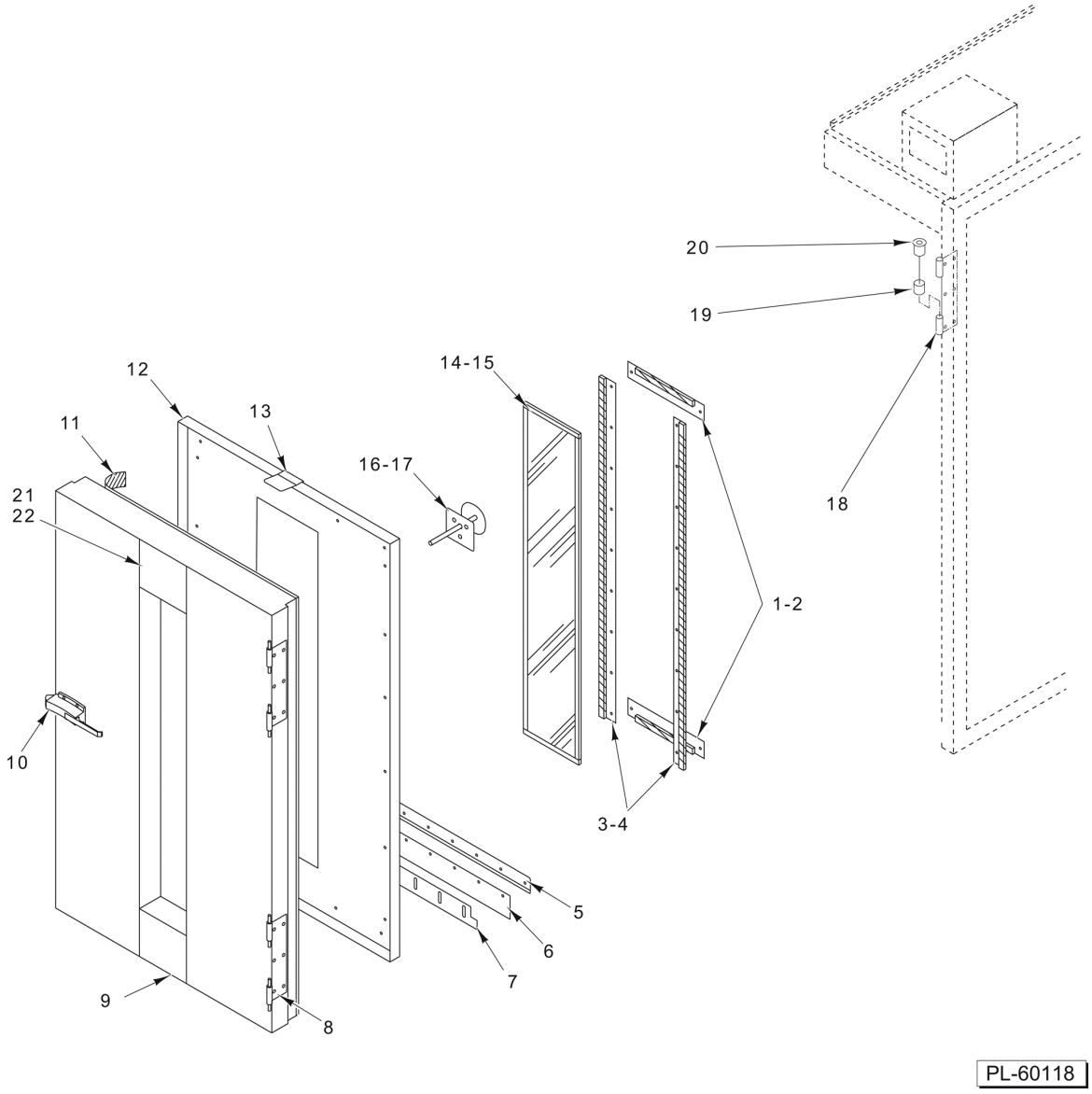

DOOR ASSEMBLY
(M2B RACK OVEN)

DOOR ASSEMBLY
(M2B RACK OVEN)

ILLUS. PL-60118	PART NO.	NAME OF PART	AMT.
1	01-1M2937-00002	Retainer - Window	2
2	01-100V21-0039A	Tape - Silicone (1/8 x 3/4) (Sold Per Inch)	26
3	01-1M2937-00001	Retainer - Window	2
4	01-100V21-0039A	Tape - Silicone (1/8 x 3/4) (Sold Per Inch)	12
5	01-1M2255-00002	Clamp - Floor Sweep	1
6	01-1M2778-00002	Strip - Silicone Floor Seal	1
7	01-1M2769-00002	Support - Floor Seal	1
8	01-1M1738-00001	Hinge - Male Door	2
9	01-1M2133-00002	Weldment - Door	1
10	01-1M3236-00002	Handle Kit	1
11	01-100V21-00065	Tape - Fiberglass (1/8 x 1) (Sold per Foot)	26
12	01-1M2135-00001	Skin - Inner Door	1
13	01-1M2254-00001	Guide - Door Switch Actuator	1
14	01-100V16-0102C	Glass - Oven Door	1
15	01-100V21-00060	Gasket - Silicone (Sold Per Ft.)	12
16	01-1M1435-00002	Handle - Interior Door	1
17	01-1000V1-00036	Ring - Retaining 7/16 In. (Zinc)	1
18	01-1M1739-00001	Hinge - Female Door	2
19	01-1000V0-00031	Bearing - (Nylon) (W/Shoulder)	AR
20	01-1000V0-00038	Bearing - Journal (Nylon)	4
21	01-100V16-00197	Label - Black	2
22	01-100V16-0168C	Label - Caution	2
	01-1M5551-00002	Door Assy. (Incls. Items 1 thru 17) (Packaged for Domestic)	1
	01-1M2469-00005	Door Assy. (Incls. Items 1 thru 17) (Packaged for Export)	1

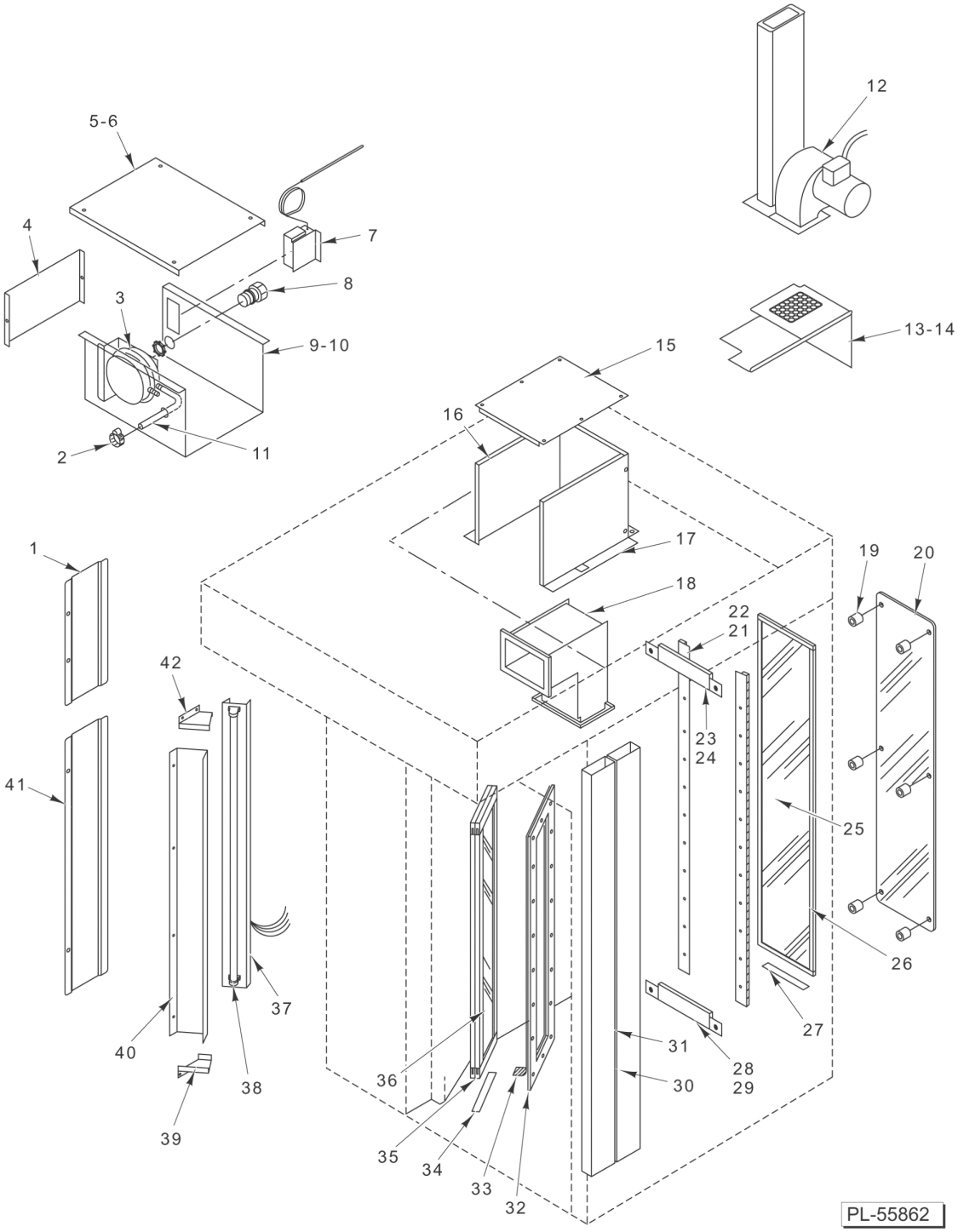

VENTS AND GLASS PANELS

VENTS AND GLASS PANELS

ILLUS. PL-55862A	PART NO.	NAME OF PART	AMT.
1	01-1M2416-00001	Vent - Light (M1B Rack Oven)	1
2	01-1000V1-00018	Clamp - Hose 1/4 I.D. x 7/16 O.D	2
3	01-1M2824-00003	Switch - Pressure Airflow Box (Hood)	1
4	01-1M2406-00001	End - Junction Box	1
5	01-1M2216-00001	Cover - Junction Box (M1B Rack Oven)	1
6	01-1M2216-00002	Cover - Junction Box (M2B Rack Oven)	1
7	01-1000V6-00118	Thermostat - High Limit	1
8	01-100V11-0088E	Connector - Seal Flex (3/8 x 90 Deg.)	1
9	01-1M2215-00003	Body - Airflow Switch Box (M1B Rack Oven)	1
10	01-1M2215-00004	Body - Airflow Switch Box (M2B Rack Oven)	1
11	01-1A1023-00425	Tube - Black (Neopene)	1
12	01-1000V8-00060	Blower (115 V.) (Double Rack Units Only)	1
13	01-1M2626-00001	Plate - Blower (M2B Rack Oven)	1
14	01-1M2629-00001	Screen - Blower (M2B Rack Oven)	1
15	01-1M2224-00001	Top - Duct Insulation Cover	1
16	01-1M2223-00001	Body - Duct Insulation Cover	1
17	01-1M2222-00001	Side - Duct Insulation Cover	1
18	01-1M2074-00001	Duct - Vent	1
19	01-1M2411-00001	Spacer - Window	6
20	01-100V16-00207	Window - Outer Wall	1
21	01-1M2937-00001	Retainer - Window	2
22	01-100V21-0039A	Tape - Silicone (1/8 x 3/4) (Sold Per Inch)	12
23	01-1M2937-00002	Retainer - Window	1
24	01-100V21-0039A	Tape - Silicone (1/8 x 3/4) (Sold Per Inch)	13
25	01-100V16-0102C	Glass - Oven Door	1
26	01-100V21-00060	Gasket - Silicone (Sold Per Ft.)	12
27	01-1M1430-00004	Strip - Door Window Support	1
28	01-1M2937-00002	Retainer - Window	1
29	01-100V21-0039A	Tape - Silicone (1/8 x 3/4) (Sold Per Inch)	13
30	01-1M2566-00001	Duct - Side (M2B Rack Oven)	1
31	01-1M2089-00001	Duct - Bottom Vent	1
32	01-1M1882-0001C	Frame - Window	1
33	01-100V21-0039A	Tape - Silicone (1/8 x 3/4) (Sold Per Inch)	5
34	01-1M1430-00003	Strip - Window Support	1
35	01-100V21-00060	Gasket - Silicone (Sold Per Ft.)	19
36	01-100V16-0102E	Glass - Tempered	2
37	01-1M2156-00001	Fixture - Light	1
38	01-1000V7-00017	Lamp - Fluorescent (40 W., Warm White, 48 In.) (Purchase Locally) (Grainger 3V477)	1
39	01-1M2157-00003	Side - Light Compartment (Lower)	1
40	01-1M2157-00002	Side - Light Compartment (Front)	1
41	01-1M2155-00001	Reflector - Light	1
42	01-1M2157-00004	Side - Light Compartment (Upper)	1

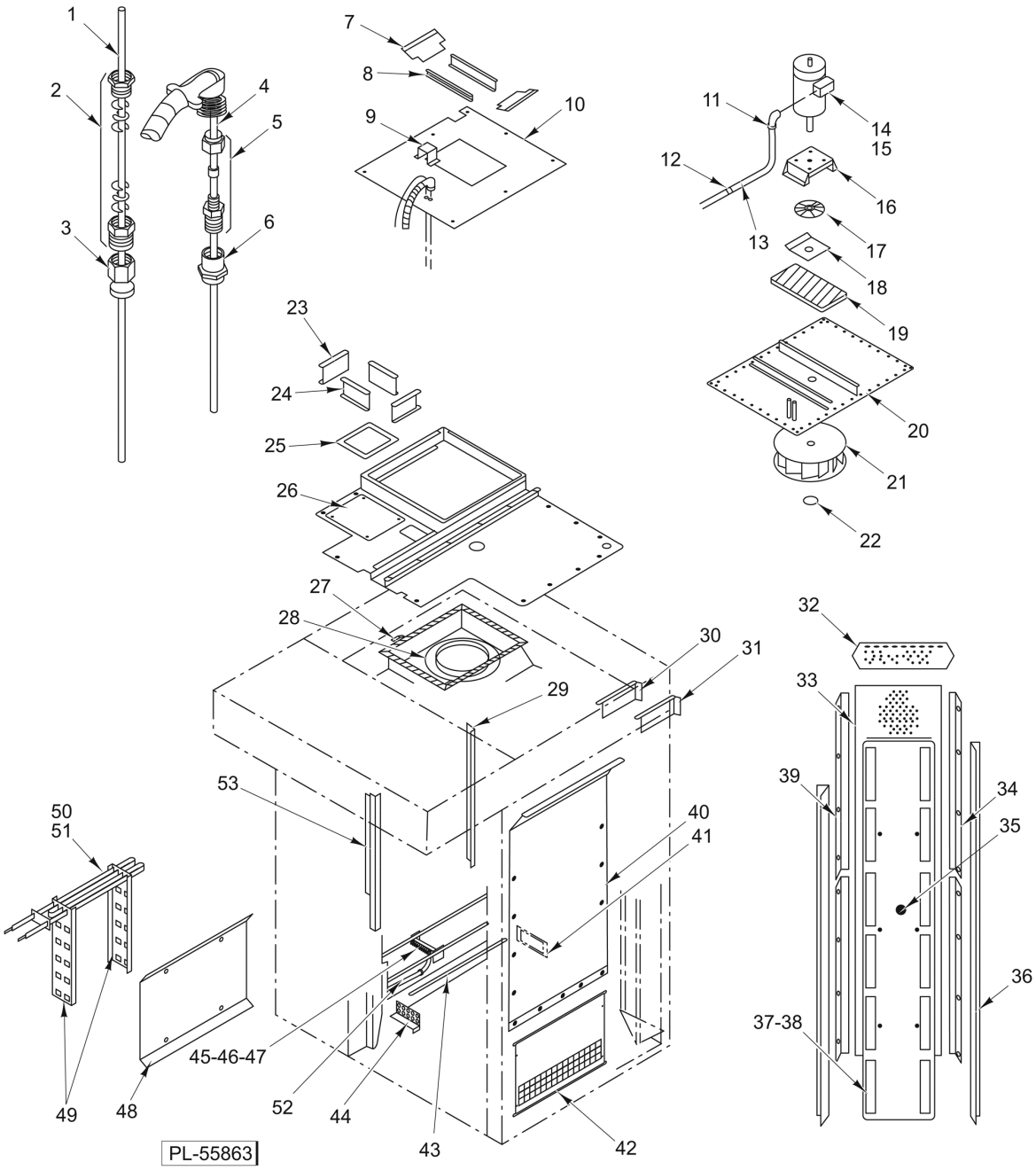

BLOWER AND PANELS
(M1B RACK OVENS)

BLOWER AND PANELS
(M1B RACK OVENS)

ILLUS. PL-55863A	PART NO.	NAME OF PART	AMT.
1	01-1000V6-00118	Thermostat - High Limit	1
2	01-100V17-00304	Kit - Stuffing Box	1
3	01-100V17-00281	Coupler - Reducer 3/8 In. to 1/4 In. (Brass)	1
4	01-1A1828-00001	Kit - Thermocouple	1
5	01-100V17-00279	Fitting 1/4 x 3/16 (Brass)	1
6	01-100V17-00257	Coupling 1/4 NPT (Brass)	1
7	01-1M1895-00001	Cover - Blower Insulation	2
8	01-1M2227-00001	Liner - Blower Insulation Cover	2
9	01-1M1433-00001	Protector - Thermocouple (Overtemp)	1
10	01-1M5456-00001	Cover - Insulation Blower	1
11	01-100V11-0088E	Connector - Seal Flex (3/8 x 90 Deg.)	1
12	01-100V11-00073	Clamp - Conduit (1/2)	2
13	01-1M2385-00001	Conduit - Seal Flex (27 In.)	1
14	01-1000V8-00052	Motor - Blower (3 Ph., 1-1/2 Hp.)	1
15	01-1000V8-00067	Motor - Blower (1 Ph., 2 Hp.)	1
16	01-1M1360-00001	Mount - Blower Motor	1
17	01-1M2458-00001	Heat Slinger Assy	1
18	01-1M1794-00001	Cover - Blower Insulation	1
19	01-1M1795-00001	Insulation - Blower	1
20	01-1M2059-00001	Weldment - Blower Mount	1
21	01-1000V8-00041	Wheel - Blower (15 In. Dia.)	1
22	01-1000V1-00028	Ring - Snap	1
23	01-1M2087-00001	Retainer - Exhaust Stack Packing	2
24	01-1M2087-00002	Retainer - Exhaust Stack Packing	2
25	01-100V21-00072	Rope - Glass (3/4 Dia.)	AR
26	01-1M2488-00001	Cover - Outer Exhaust Hole	1
27	01-100V21-00056	Tape - Fiberglass (Woven)	AR
28	01-1M2451-00001	Bell - Inlet (15 In.)	1
29	01-1M2191-00001	Bracket - Mounting	2
30	01-1M2589-00001	Guide - Ceiling Air	1
31	01-1M2589-00002	Guide - Ceiling Air	1
32	01-1M2101-00004	Z-Bar (Pressure Panel)	1
33	01-1M2572-00001	Screen - Pressure Panel	1
34	01-1M2479-00002	Retainer - Screen (RH)	2
35	01-1M2586-00001	Body - Pressure Panel Shutter Support	1
36	01-1M2563-00001	Wing - Adjustable Air	2
37	01-1M2098-00003	Shutter - Pressure Panel (Previous Construction)	12
38	01-1M3117-00001	(Current Construction)	12
39	01-1M2479-00003	Retainer - Screen (LH)	2
40	01-1M2583-0001E	Panel - Suction (Upper)	1
41	01-1M2195-00001	Spacer - Rebar (Rear)	1
42	01-1M2584-00001	Panel - Suction (Lower)	1
43	01-1M2112-00001	Rebar (5/8-31 In.)	88
44	01-1M2195-00002	Spacer - Rebar (Forward)	1
45	01-1M2355-00006	Manifold - Steam Generator	1
46	01-100V17-00371	Nozzle - Spray	10
47	01-100V17-00378	Nozzle - Spray (Dunkin Donuts)	10
48	01-1M2338-00001	Baffle - Heating Compartment	1
49	01-1M2340-00001	Holder - Element	2
50	01-1M2009-00001	Element (208 V.)	6
51	01-1M2009-00002	Element (240-480 V.)	6
52	01-1M3466-01262	Pipe 1/2 x 12.62 In. (SST)	1
53	01-1M2191-00001	Bracket - Mounting	2
	01-1M2060-00002	Blower Assy. (3 Ph. Motor) (Incls. Items 14 & 16 thru 22)	1

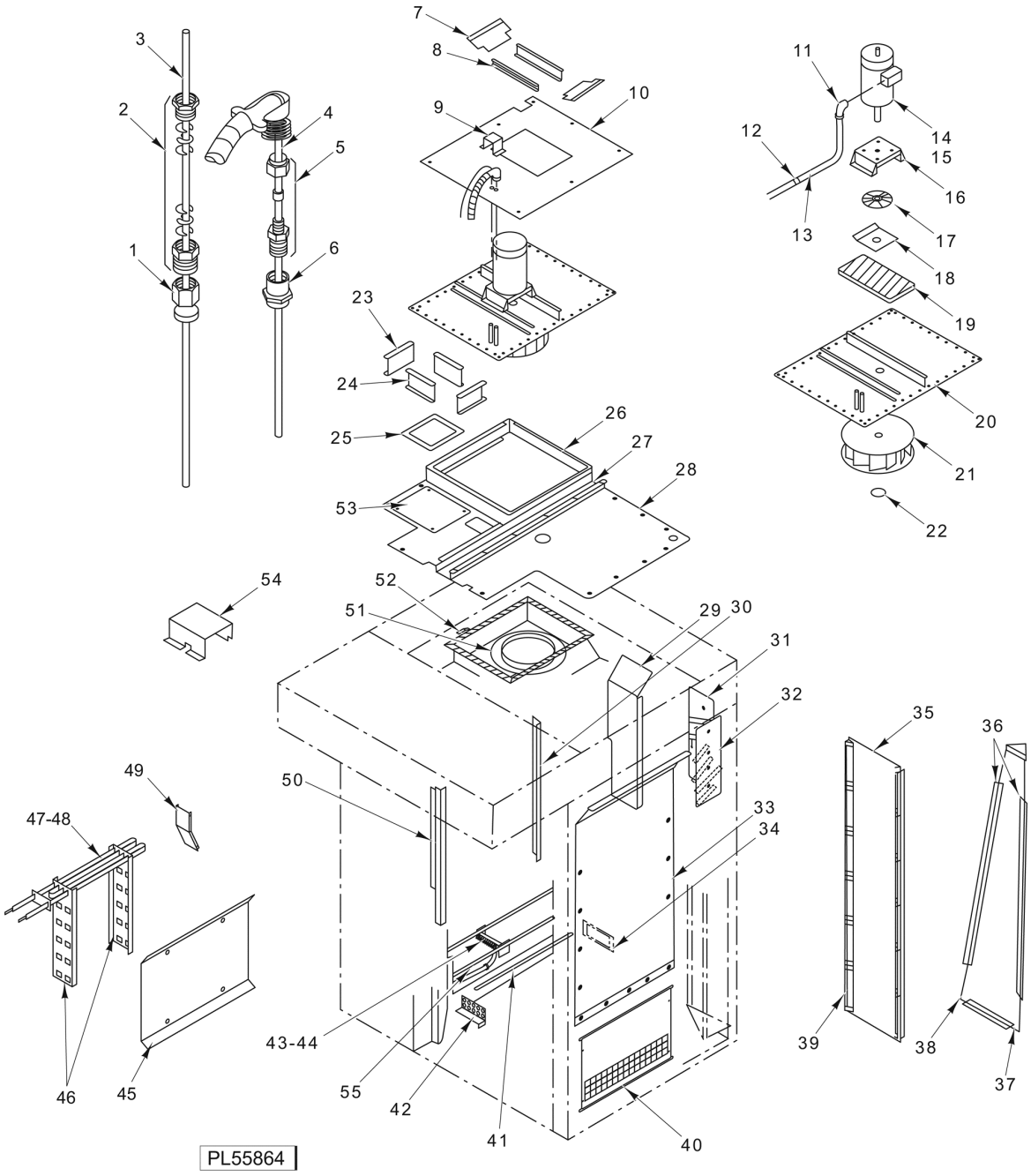

BLOWER AND PANELS
(M2B RACK OVEN)

BLOWER AND PANELS
(M2B RACK OVEN)

ILLUS. PL-55864A	PART NO.	NAME OF PART	AMT.
1	01-100V17-00281	Coupler - Reducer 3/8 In. to 1/4 In. (Brass)	1
2	01-100V17-00304	Kit - Stuffing Box (Brass)	1
3	01-1000V6-00118	Thermostat - High Limit	1
4	01-1A1828-00001	Kit - Thermocouple	1
5	01-100V17-00279	Fitting 1/4 x 3/16 (Brass)	1
6	01-100V17-00257	Coupling 1/4 NPT (Brass)	1
7	01-1M1895-00001	Cover - Blower Insulation	2
8	01-1M2227-00001	Liner - Blower Insulation Cover	2
9	01-1M1433-00001	Protector - Thermocouple	1
10	01-1M5027-00001	Cover - Blower Insulation	1
11	01-100V11-0088E	Connector - Seal Flex (3/8 x 90 Deg.)	1
12	01-1M2385-00004	Conduit -	AR
13	01-100V11-00073	Clamp - Conduit (1/2)	2
14	01-1000V8-00052	Motor - Blower (3 Ph., 1-1/2 Hp.)	1
15	01-1000V8-00067	Motor - Blower (1 Ph., 2 Hp.)	1
16	01-1M1360-00001	Mount - Blower Motor	1
17	01-1M2458-00001	Heat Slinger Assy	1
18	01-1M1794-00001	Cover - Blower Insulation	1
19	01-1M1795-00001	Insulation - Blower	1
20	01-1M5026-00001	Weldment - Blower Mount	1
21	01-1000V8-00058	Wheel - Blower (18 In. Dia.)	1
22	01-1000V1-00028	Ring - Snap	1
23	01-1M2087-00002	Retainer - Exhaust Stack Packing	2
24	01-1M2087-00003	Retainer - Exhaust Stack Packing	2
25	01-100V21-00072	Rope - Glass (3/4 Dia.)	AR
26	01-1M2544-00002	Skin - Outer Ceiling	1
27	01-1M2552-00001	Channel - Ceiling Skin Access	1
28	01-1M2211-00002	Body - Ceiling Skin (RH)	1
29	01-1M2854-00001	Guide - Rear Air	1
30	01-1M2468-00002	Bracket - Upper Suction Panel Mounting (Rear)	2
31	01-1M2557-00001	Guide - Pressure Panel Air (LH)	1
32	01-1M2557-00002	Guide - Pressure Panel Air (RH)	1
33	01-1M2542-0001E	Panel - Upper Suction	1
34	01-1M2195-00003	Spacer - Rebar (Rear)	1
35	01-1M2096-00002	Body - Pressure Panel Shutter Support	1
36	01-1M2560-00002	Retainer - Pressure Panel Side Wall	1
37	01-1M2560-00001	Retainer - Pressure Panel Bottom Wall	1
38	01-1M2579-00001	Wall - Inner Pressure Panel	1
39	01-1M3117-00001	Shutter - Pressure Panel 97 Deg	12
40		Panel - Lower Suction (No Longer Available)	1
41	01-1M2112-00002	Rebar - Steam Generator	AR
42	01-1M2195-00004	Spacer - Rebar (Forward)	1
43	01-1M2355-00003	Manifold - Steam Generator	1
44	01-100V17-00371	Nozzle - Spray	12
45	01-1M2998-00002	Baffle - Heat Compartment	1
46	01-1M2340-00002	Holder - Element	1
47	01-1M2009-00001	Element (208 V.)	8
48	01-1M2009-00002	Element (240-480 V.)	8
49	01-1M2358-00001	Baffle - Rear	1
50	01-1M2458-00001	Bracket - Upper Suction Panel Mounting (Forward)	2
51	01-1M2451-00002	Bell - Inlet	1
52	01-100V21-00056	Tape - Fiberglass (Woven)	AR
53	01-1M2471-00001	Cover - Outer Exhaust Hole	1
54	01-1M2553-00001	Cover - Harness	1
55	01-1M3466-01800	Pipe 1/2 x 18 In. (SST)	1
	01-1M5025-00001	Blower Assy. (3 Ph.) (Incls. Items 14 & 16 thru 22)	1

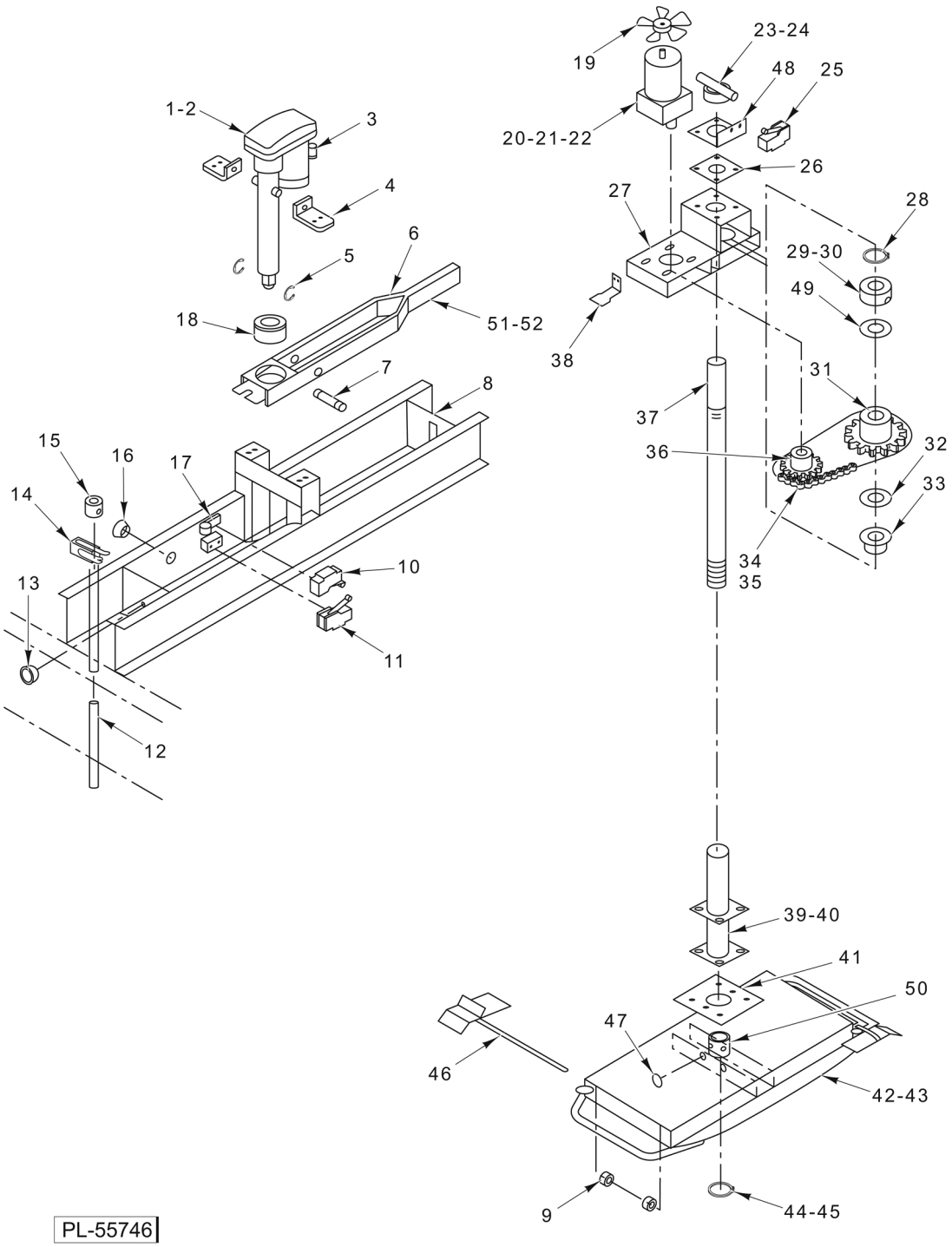

LIFTER/ROTATOR

LIFTER/ROTATOR

ILLUS. PL-55746B	PART NO.	NAME OF PART	AMT.
1	01-1M2418-00001	Actuator - Linear	1
2	01-1A1344-00001	Kit - Linear Actuator Brake	1
3	01-1000V8-0046C	Capacitor - Linear Actuator	1
4	01-1M2289-00001	Angle - Linear Actuator Support	2
5	01-1000V1-00037	Ring - Snap 1/2 In. Dia	2
6	01-1M2304-00001	Arm - Lifter	1
7	01-1M2290-00001	Shaft - Pivot (Linear Actuator Support)	1
8	01-1M2298-00001	Weldment - Lifter	1
9	01-1000V1-00013	Collar - Set 1/2 In. Dia	4
10	01-1000V6-00065	Microswitch	1
11	01-1000V6-00065	Microswitch	1
12	01-1M2765-00001	Rod - Door Switch Actuator	1
13	01-1000V5-00059	Bushing - Snap (Plastic)	1
14	01-1000V6-00065	Microswitch	1
15	01-1M2346-00001	Collar - Door Switch	1
16	01-1000V5-00073	Bushing - Snap	1
17	01-1M2296-00001	Bracket - Microswitch Linear Actuator	1
18	01-1000V0-00051	Bushing - Spherical	1
19	01-1000V8-00056	Blade - Fan 5-1/2 In	1
20	01-1000V8-0049C	Capacitor	1
21	01-1A2141-00001	Kit - Rotator Capacitor (Current Construction)	1
22	01-1000V8-0049A	Motor - Gear	1
23	01-1M5201-00001	Pointer - Rotator	1
24	01-1M4879-00001	Rotator (C-Lift Stops) (360 Deg.)	1
25	01-1000V6-00001	Micro-Switch	1
26	01-1M1927-00001	Plate - Teflon	1
27	01-1M2114-00001	Weldment - Rotator	1
28	01-1000V1-00004	Ring - Snap (1-1/2 In.)	1
29	01-1M2264-00001	Set Collar - Lifter	1
30		Set Screw 3/8-16	1
31	01-1M2228-00001	Sprocket - Rotator Lifter	1
32	01-1000V0-00068	Washer - Rotator Thrust	1
33	01-1000V0-00054	Bearing - Flanged	1
34	01-1000V3-00087	Chain - Roller	1
35	01-1000V3-00088	Link - Connecting	1
36	01-1000V3-00085	Sprocket	1
37	01-1M2797-00001	Shaft - Lifter	1
38	01-1M2489-00001	Actuator - Micro-Switch	1
39	01-1M2140-00001	Housing - Rotator Shaft (Incls. Item 42)	1
40	01-1000V0-00055	Bearing - Rotator Shaft	2
41	01-1M1899-00001	Clamp - Rotator Housing	1
42	01-1M1799-00001	Body - Carrier (M1B Rack Oven)	1
43	01-1M1799-00002	Body - Carrier (M2B Rack Oven)	1
44	01-1000V1-00004	Ring - Snap (1-1/2 In.)	1
45	01-1M2783-00001	Washer	1
46	01-1M2580-00002	Stop - Rack Carrier	2
47	01-100V15-00048	Plug - Plated (For 0.75 Hole)	2
48	01-1M5085-00001	Plate - Rotator	1
49	01-1M2265-00001	Clutch Slide - Lifter	1
50	01-1000V4-00199	Set Screw 3/8-24 x 3/8 Allen Hd	4
51	01-1M2730-00001	Plate	1
52	01-1M2731-00001	Strip	1
	01-1M2183-00001	Lifter Assy. (M1B Rack Oven) (Incls. Items 1 thru 8, 10, 12, 13, 15, & 16)	1
	01-1M2183-00002	Lifter Assy. (M2B Rack Oven) (Incls. Items 1 thru 8, 11, 12, 13, 15, & 16)	1
	01-1M2796-00001	Carrier Assy. (M1B Rack Oven) (Incls. Items 9, 42, & 46)	1
	01-1M2796-00002	Carrier Assy. (M2B Rack Oven) (Incls. Items 9, 42, & 46)	1
	01-1M2482-00001	Harness - Lifter	1

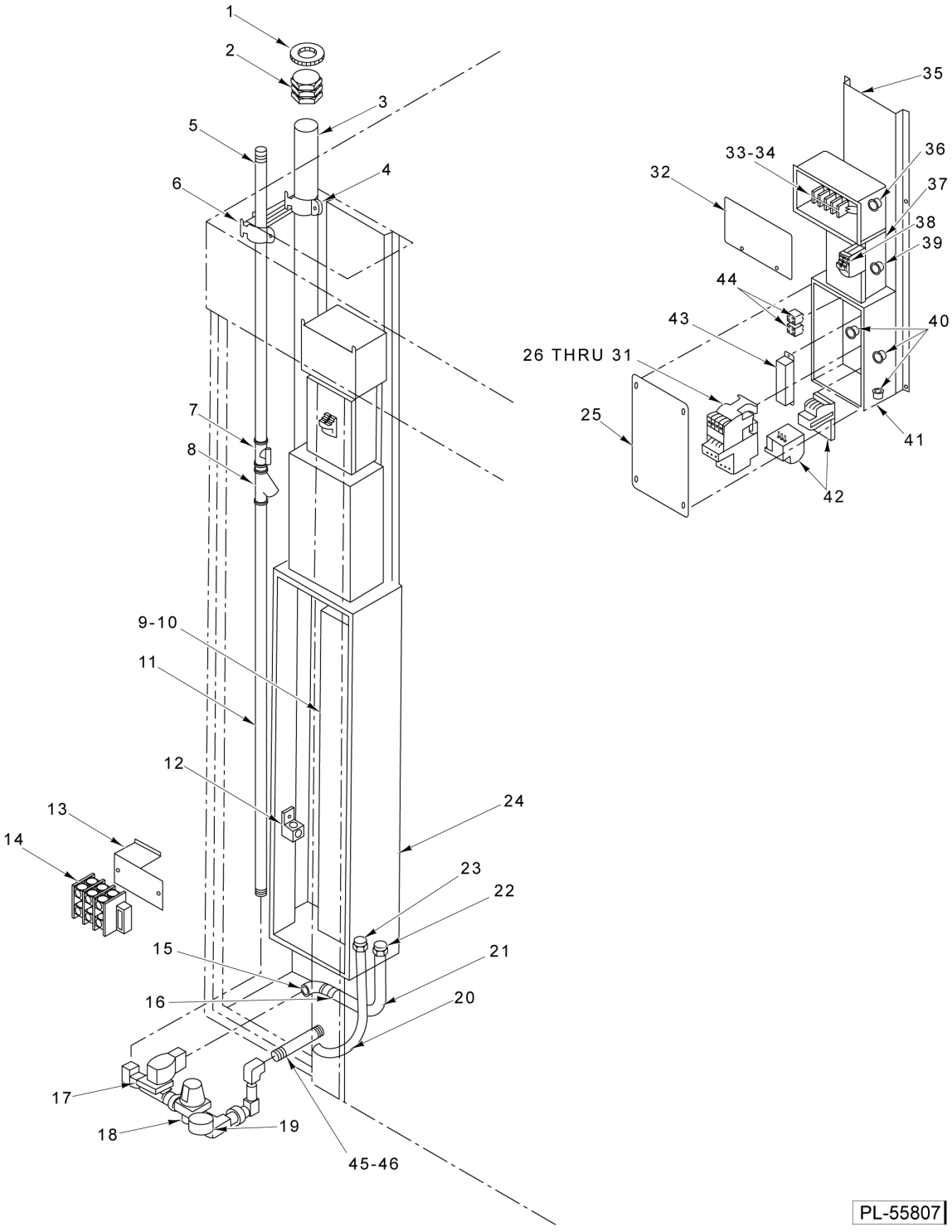

WATER AND ELECTRIC SUPPLY

WATER AND ELECTRIC SUPPLY

ILLUS. PL-55807A	PART NO.	NAME OF PART	AMT.
1	01-100V11-0032D	Bushing - Insulated	1
2	01-100V11-00100	Connector - Conduit	2
3	01-1M2582-00001	Conduit - Rigid (2 Dia.)	1
4	01-100V11-00106	Strap (2 Dia. EMT)	1
5	01-1M2314-00003	Pipe - Galvanized	1
6	01-100V11-00104	Strap (1/2 Dia. EMT)	1
7	01-100V17-00089	Valve - Ball 1/2 In. NPTF (Bronze)	1
8	01-100V17-00275	Strainer - Brass (1/2 NPT)	1
9	01-1M2332-00001	Support - Component (M1B Rack Ovens)	1
10	01-1M2332-00002	Support - Component (M2B Rack Ovens)	1
11	01-1M2314-00002	Pipe - Galvanized	1
12	01-1000V5-00101	Lug - Grounding	1
13	01-1M2339-00001	Mount - Service Connection Block	1
14	01-1000V5-00063	Power Distribution Block	1
15	01-100V11-0088G	Connector - Conduit (3/8 x 90 Deg.)	1
16	01-100V11-00073	Clamp - Conduit (1/2)	1
17	01-100V17-00274	Valve - Solenoid (1/2 NPT)	1
18	01-100V17-00330	Regulator - Pressure (1/2 NPT)	1
19	01-100V17-00204	Gauge - Pressure (1/4 NPT)	1
20	01-1M2494-00002	Conduit (3/4 Dia.)	1
21	01-1M2385-00003	Conduit - Seal Flex	1
22	01-100V11-0088H	Connector - Conduit Straight (3/8 Dia.)	1
23	01-100V11-0088E	Connector - Seal Flex (3/8 x 90 Deg.)	1
24	01-1M2331-00001	Box - Component Electric	1
25	01-1M2768-00001	Cover - Electrical Box	1
26	01-1000V6-00231	Contactor - Blower Circulation (3 Ph.) (50/60 Hz.)	1
27	01-1000V6-00232	Overload - Blower Circulation (208-240 V., 4-6 Amp., 3 Ph.)	1
28	01-1000V6-00235	Overload - Blower Circulation (480 V., 1.2-2.5 Amp., 3 Ph.)	1
29	01-1M5355-00001	Kit - Contactor Overload (208-240V., 3 Ph.)	1
30	01-1000V6-00233	Contactor - Blower Circulation (208-240 V., 1 Ph.)	1
31	01-1000V6-00264	Overload - Blower Circulation (208-240 V., 7-10 Amp., 1 Ph.)	1
32	01-1M2237-00002	Cover - Service Entrance	1
33	01-1000V5-00106	Strip End - Terminal	2
34	01-1000V5-00105	Strip - Terminal	5
35	01-1M2236-00002	Weldment - Electric Module Mount/Box	1
36	01-1000V5-00035	Bushing - Snap (1 In.)	1
37	01-100V11-00139	Box - Breaker	1
38	01-1000V6-00126	Breaker - Circuit (15 Amp.)	2
39	01-1000V5-00059	Bushing - Snap (Plastic)	1
40	01-1000V5-00073	Bushing - Snap	3
41	01-1M2238-00001	Box - Electrical	1
42	01-1A1604-00001	Kit - Overload Rotator Lifter	1
43	01-1M2906-00001	Ballast - Lamp	1
44	01-1000V6-00070	Relay - D.P.D.T. (1/4 Hp., 120 VAC)	2
45	01-1M3466-00550	Pipe 1/2 x 5-1/2	1
46	01-100V17-00183	Coupler 1/2 In. (SST)	1
	01-1M2379-00001	Supply - Water	1
	01-1M2234-00002	Module - Electric (Incls. Items 25 thru 44)	1
	01-1M2532-00001	Harness - Main	1

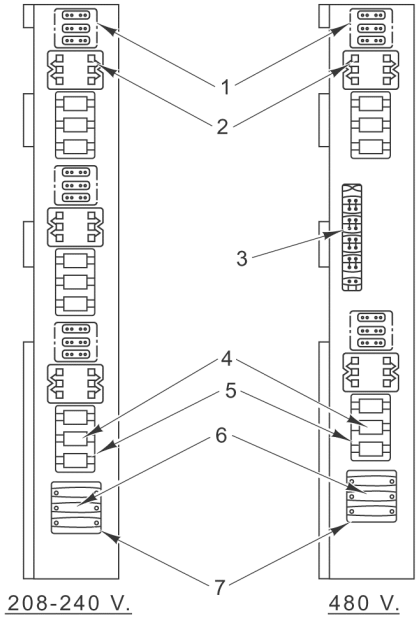

M2B RACK OVEN

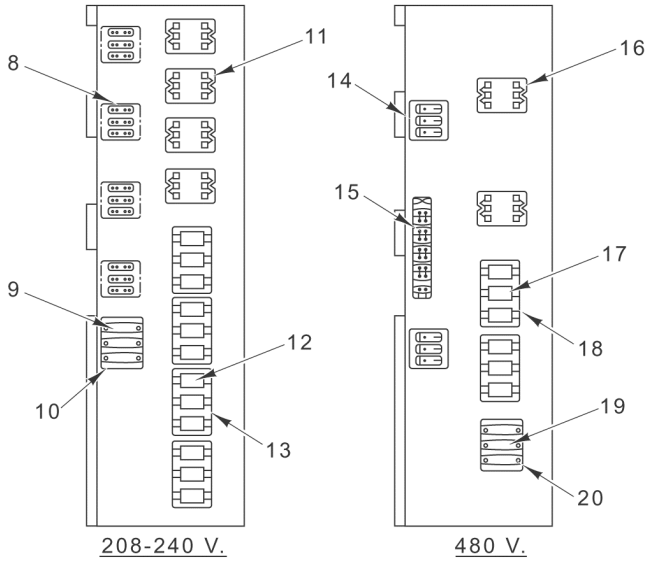

M1B RACK OVEN

PL-55812

ELECTRICAL COMPONENT PANELS

ELECTRICAL COMPONENT PANELS

ILLUS. PL-55812A	PART NO.	NAME OF PART	AMT.
1	01-1000V5-00096	Block - Power Distribution	3
2	01-1000V6-00115	Contactor	3
3	01-1000V5-00099	Block - Double Row Terminal	1
4	01-100V10-00072	Fuse - Element	9
5	01-100V10-00073	Holder - Element Fuse (60 Amp.)	3
6	01-100V10-00079	Fuse - Current Limiting (Class T)	3
7	01-100V10-00078	Holder - Fuse (30 Amp.)	1
8	01-1000V5-00096	Block - Power Distribution	4
9	01-100V10-00079	Fuse - Current Limiting (Class T)	3
10	01-100V10-00078	Holder - Fuse (30 Amp.)	1
11	01-1000V6-00115	Contactor	4
12	01-100V10-00072	Fuse - Element	12
13	01-100V10-00073	Holder - Element Fuse (60 Amp.)	4
14	01-1000V5-00096	Block - Power Distribution	2
15	01-1000V5-00099	Block - Double Row Terminal	1
16	01-1000V6-00115	Contactor	2
17	01-100V10-00072	Fuse - Element	6
18	01-100V10-00073	Holder - Element Fuse (60 Amp.)	2
19	01-100V10-00079	Fuse - Current Limiting (Class T)	3
20	01-100V10-00078	Holder - Fuse (30 Amp.)	1

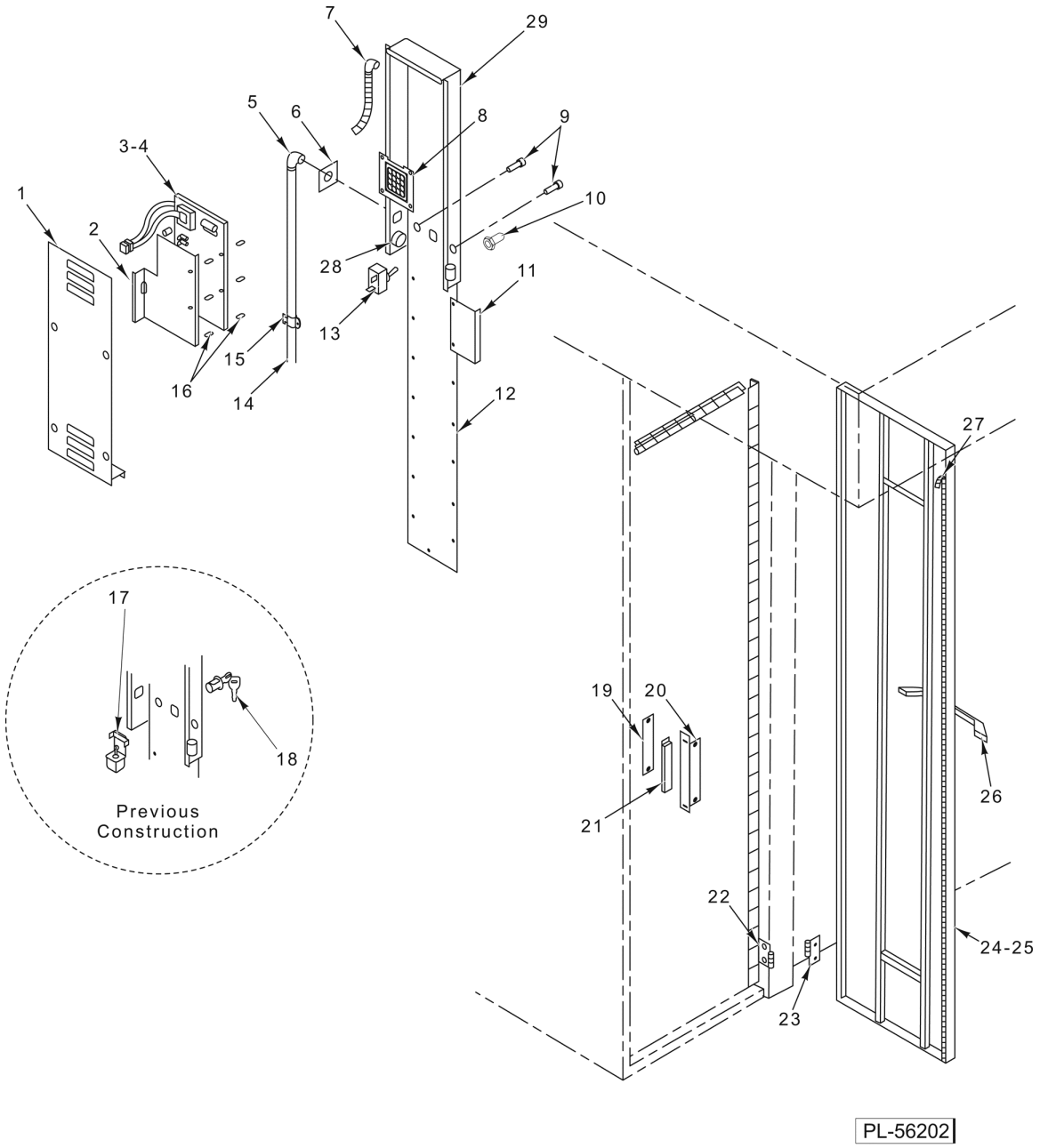

DIGITAL DOOR CONTROL ASSEMBLY

DIGITAL DOOR CONTROL ASSEMBLY

ILLUS. PL-56202A	PART NO.	NAME OF PART	AMT.
1	01-1M2281-00001	Cover - Control Panel	1
2	01-1M2596-00001	Shield - PC Board	1
3	01-1M2945-00001	PC Board Assy	1
*4		E-Prom Chip	1
5	01-100V11-0088D	Connector - Seal Flex (3/4 x 90 Deg.)	1
6	01-1M1937-00001	Plate - Harness	1
7	01-100V11-0030A	Connector - Seal Flex (3/8 x 90 Deg.)	2
8	01-1M2899-00001	Kit - Key Pad	1
9	01-1000V6-00183	Switch - Push Button (Red)	2
10	01-1000V4-00019	Boot - Toggle Switch Seal	1
11	01-1M2225-00001	Plate - Magnet	1
12	01-1M2151-00001	Plate - Control Panel	1
13	01-1000V6-00151	Switch - Toggle	1
14	01-1M2494-00002	Conduit (3/4 Dia.)	1
15	01-100V11-00074	Clamp (3/4 EMT)	3
16	01-1000V5-00160	Spacer - Nylon	12
17	01-1M2024-00001	Kit - Key Switch Assy. (Previous Construction)	1
18	01-100V18-0087K	Key - On/Off Replacement (Key Only)	1
19	01-1M1911-00102	Backer - Magnet Holder	1
20	01-1M1911-00101	Body - Magnet Holder	1
21	01-100V16-00055	Magnet	1
22	01-1M1934-00001	Hinge - Control Door Female	3
23	01-1M1934-00002	Hinge - Control Door Male	3
24	01-1M2146-00001	Weldment - Control Door (M1B Rack Oven)	1
25	01-1M2146-00002	Weldment - Control Door (M2B Rack Oven)	1
26	01-100V18-00090	Handle - Chrome	1
27	01-100V21-00084	Gasket - Silicone (Sold Per Ft.)	7
28	01-100V10-00034	Buzzer	1
29	01-100V16-00339	Overlay Control	1
	01-1M2147-00001	Digital Door Control Assy. (M1B Rack Oven)	1
	01-1M2147-00002	Digital Door Control Assy. (M2B Rack Oven)	1
	01-1M2897-00001	Harness - Digital Control Panel	1
	01-1M2424-00001	Panel - Control Digital (Incls. Items 1 thru 16)	1
	01-1M4511-00001	Kit - Toggle Switch Retrofit (Current Construction Style Switch Rework)	1
		Kit - Upgrade (To current HBA/OV500 controls) (Contact factory with serial number)	1

* Contact factory with version number and Contact Product Service for Part Number.

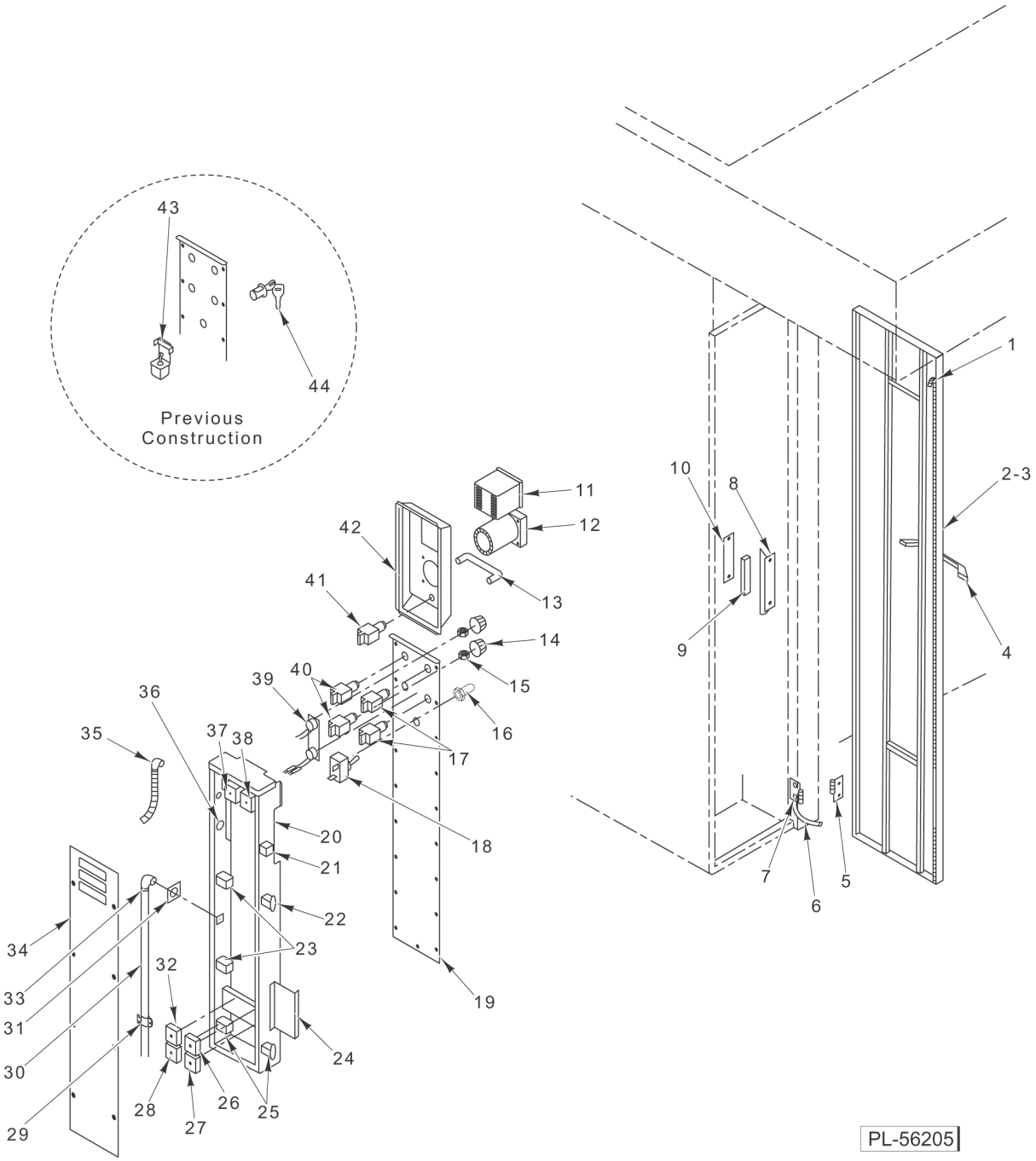

AUTO DOOR CONTROL ASSEMBLY

AUTO DOOR CONTROL ASSEMBLY

ILLUS. PL-56205A	PART NO.	NAME OF PART	AMT.
1	01-100V21-00084	Gasket - Silicone (Sold Per Ft.)	7
2	01-1M2146-00001	Weldment - Control Door (M1B Rack Oven)	1
3	01-1M2146-00002	Weldment - Control Door (M2B Rack Oven)	1
4	01-100V18-00090	Handle - Chrome	1
5	01-1M1934-00002	Hinge - Control Door Male	3
6	01-1M2777-00001	Strap - Ground	1
7	01-1M1934-00001	Hinge - Control Door Female	3
8	01-1M1911-00101	Body - Magnet Holder	1
9	01-100V16-00055	Magnet	1
10	01-1M1911-00102	Backer - Magnet Holder	1
11	01-1A1499-00001	Kit - Thermostat (Digital Preset)	1
12	01-100V10-00071	Timer - 60 Minute	1
13	01-1M2443-00001	Guard - Instrument Control Panel	1
14	01-100V10-00040	Knob	2
15	01-1000V4-00018	Seal - Shaft	2
16	01-1000V4-00019	Boot	1
17	01-1000V6-00160	Push Button - Maintained (Green)	3
18	01-1000V6-00151	Switch - Toggle	1
19	01-1M2435-00001	Panel - Lower Control	1
20	01-1M2436-00001	Box - Control Panel Junction	1
21	01-100V10-00034	Buzzer	1
22	01-1M2602-00001	Relay - Auto Door Assy	1
23	01-1000V6-00070	Relay	4
24	01-1M2442-00001	Plate - Control Door Magnet	1
25	01-1000V6-00070	Relay - D.P.D.T. (1/4 Hp., 120 VAC)	4
26	01-1M2444-00001	Timer - Control Panel (T2)	1
27	01-1M2444-00002	Timer - Control Panel (T4)	1
28	01-1M2444-00004	Timer - Control Panel (T5) (Contact factory for Part Number)	1
29	01-100V11-00074	Clamp (3/4 EMT)	1
30	01-1M2494-00001	Conduit (3/4 Dia.)	1
31	01-1M1937-00001	Plate - Harness	1
32	01-1M2444-00005	Timer - Control Panel (T6)	1
33	01-100V11-0088D	Connector - Seal Flex (3/4 x 90 Deg.)	1
34	01-1M2438-00001	Cover - Control Panel Junction Box	1
35	01-100V11-0030A	Connector - Seal Flex (3/8 x 90 Deg.)	2
36	01-100V10-00109	Core - Ferrite Torodial	1
37	01-1M2444-00006	Timer (T7)	1
38	01-1M2444-00003	Timer - Control Panel (T3)	1
39	01-1M2472-00001	Potentiometer Assy	1
40	01-1000V6-00159	Push Button - Momentary (Green)	2
41	01-1000V6-00160	Push Button - Maintained (Green)	3
42	01-1M2433-00001	Panel - Upper Control	1
43	01-1M2024-00001	Kit - Key Switch Assy. (Previous Construction)	1
44	01-100V18-0087K	Key - On/Off Replacement (Key Only)	1
	01-1M2494-00002	Conduit (3/4 Dia.)	1
	01-100V11-00074	Clamp (3/4 EMT)	3
	01-1M2441-00001	Door - Control	1
	01-1M2445-00001	Harness - Control Panel	1
	01-1M4511-00001	Kit - Toggle Switch Retrofit (Current Construction Style Switch Rework)	1

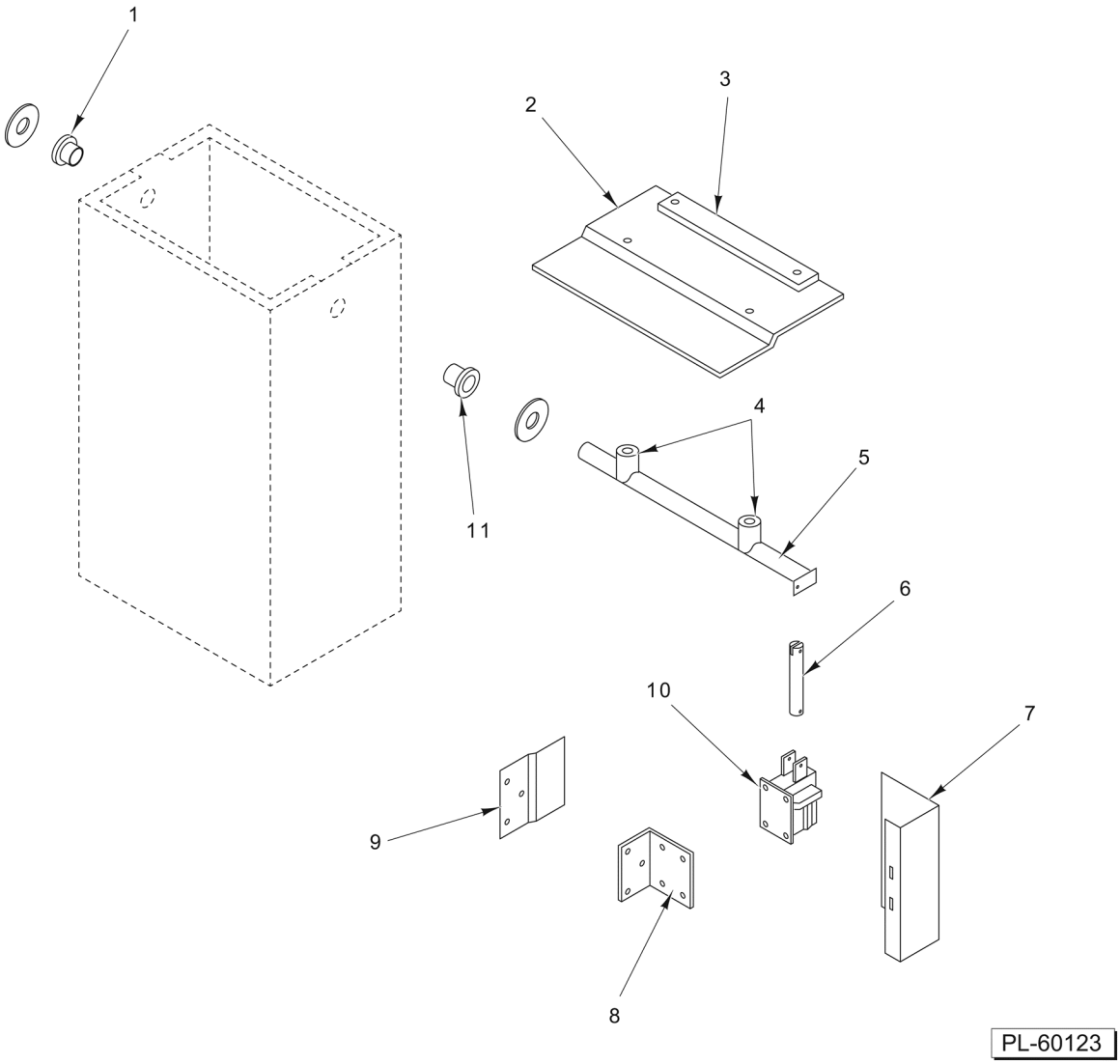

POWER VENT ASSEMBLY

POWER VENT ASSEMBLY

ILLUS. PL-60123	PART NO.	NAME OF PART	AMT.
1	01-1000V0-00058	Bearing	1
2	01-1M2915-00001	Flapper	1
3	01-1M2920-00001	Counterweight - Flapper	1
4	01-1M2914-00001	Spacer - Flapper	2
5	01-1M2912-00001	Actuator - Flapper	1
6	01-1M2913-00001	Linkage - Flapper	1
7	01-1M2940-00001	Cover - Solenoid	1
8	01-1M2917-00001	Bracket - Solenoid	1
9	01-1M2916-00001	Shield - Solenoid	1
10	01-1000V6-00152	Solenoid - Actuator (120 V.)	1
11	01-1000V0-00058	Bearing	1