CATALOG OF REPLACEMENT PARTS



OV210 GAS RACK OVENS

ML-132113	**OV210G-M1B**
ML-132115	**OV210G-M2B**

A product of BAXTER MFG. CO., INC. 19220 STATE ROUTE 162 EAST, ORTING, WA 98360

FORM 43047 Rev. C (January 2023)

 © BAXTER MFG. 2023

Table of Contents

5 EXTERIOR UNIT (ML-132113)
7 EXTERIOR UNIT (ML-132115)
9 DOOR ASSEMBLY (ML-132113)
11 DOOR ASSEMBLY (ML-132115)
13 VENTS AND GLASS PANELS
15 BLOWER AND PANELS (ML-132113)
17 BLOWER AND PANELS (ML-132115)
19 LIFTER/ROTATOR
21 ELECTRIC MODULE
23 WATER AND GAS SUPPLY
25 DIGITAL DOOR CONTROL ASSEMBLY
27 AUTO DOOR CONTROL ASSEMBLY
29 B321 BURNER ASSEMBLY (CURRENT CONSTRUCTION)
31 P250 BURNER ASSEMBLY (PREVIOUS CONSTRUCTION)
33 POWER VENT ASSEMBLY

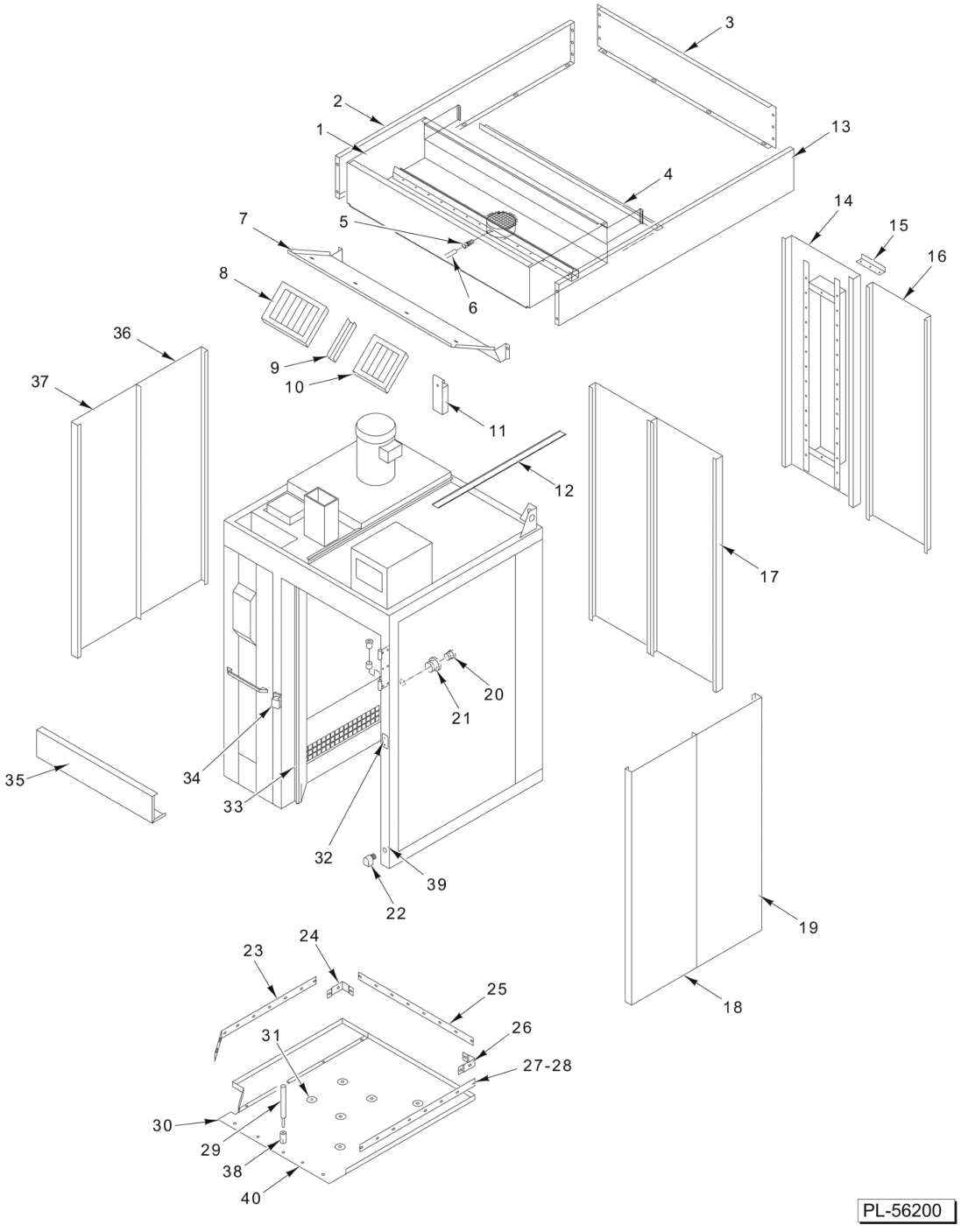

EXTERIOR UNIT (ML-132113)

EXTERIOR UNIT (ML-132113)

ILLUS. PL-56200	PART NO.	NAME OF PART	AMT.
1	01-1M5288-00001	NLA - Obsolete--Hood Assy	1
2	01-1M5351-00001	Panel - Side Hood (LH)	1
3	01-1M5352-00001	Panel - Rear Hood	1
4	01-1M2341-00001	Trim - Angle Hood	1
5	FP-078-49	Fitting - Tube (1/4 In.) (Brass)	1
*6	01-100V17-00004	Tube 1/4 O.D. x 72 In. Lg. (Alum.)	AR
7	01-1M2491-00001	Deflector - Air Hood	1
8	01-100V18-00088	Filter - Hood (16 x 16) (W/Drop)	2
9	01-1M2247-00001	Filler - Filter	1
10	01-100V18-00089	Filter - Hood (16 x 20) (W/Drop)	1
11	01-1M3032-00001	Cup - Hood Grease	1
12	01-1M2961-00002	Skin - Ceiling Outer (RH)	1
13	01-1M5351-00001	Panel - Side Hood (RH)	1
**14	01-1M2409-00001	Skin - Outer Wall (W/ Window Opening)	1
**15	01-1M2408-00001	Angle - Rear Window Trim	2
**16	01-1M2120-00005	Skin - Outer Wall	1
17	01-1M5672-00005	Skin - Outer Side	1
18	01-1M2120-00009	Skin - Outer Side	1
19	01-1M2120-00010	Skin - Outer Side	1
20	01-100V17-00259	Plug - Pipe 3/8 NPT (Brass)	1
21	01-100V17-00266	Bushing 3/8 NPT x 3/4 NPT (Brass)	1
22	01-100V17-00301	Ell 2-1/2 x 45 Deg. Blk	1
23	01-1M2072-00004	Trim - Floor	1
24	01-1M2071-00002	Joint - Corner Floor Trim	1
25	01-1M2072-00001	Trim - Floor	1
26	01-1M2071-00001	Joint - Corner Floor Trim	1
27	01-1M2072-00002	Trim - Floor	1
*28	01-100V21-00073	Gasket - Red Silicone (Use With Items 23 thru 27)	AR
29	01-1000V4-0073A	Tool - Setting	1
30	01-1M2086-00001	Floor	1
31	01-1M2372-00001	Hold Down - Floor	4
32	01-1M1711-0003C	Plate - Front Cover	1
33	01-100V21-00078	Gasket - Silicone (E-Shaped)	17
34	01-1M3236-00001	Strike - Chrome Plated	1
35	01-1M2164-0001A	Skin - Outer Header	1
36	01-1M2120-00009	Skin - Outer Side	1
37	01-1M2120-00010	Skin - Outer Side	1
38	01-1000V4-00073	Anchor - Drop-In 1/4-20	9
39	01-1M2335-00001	Wheel (For Installation)	1
40	01-1M2336-00001	Kit - Floor Extender (Apron)	1
	01-1M2554-00001	NLA - Obsolete--Hardware Package	1

* (Sold Per Inch.)
** (Optional part.)

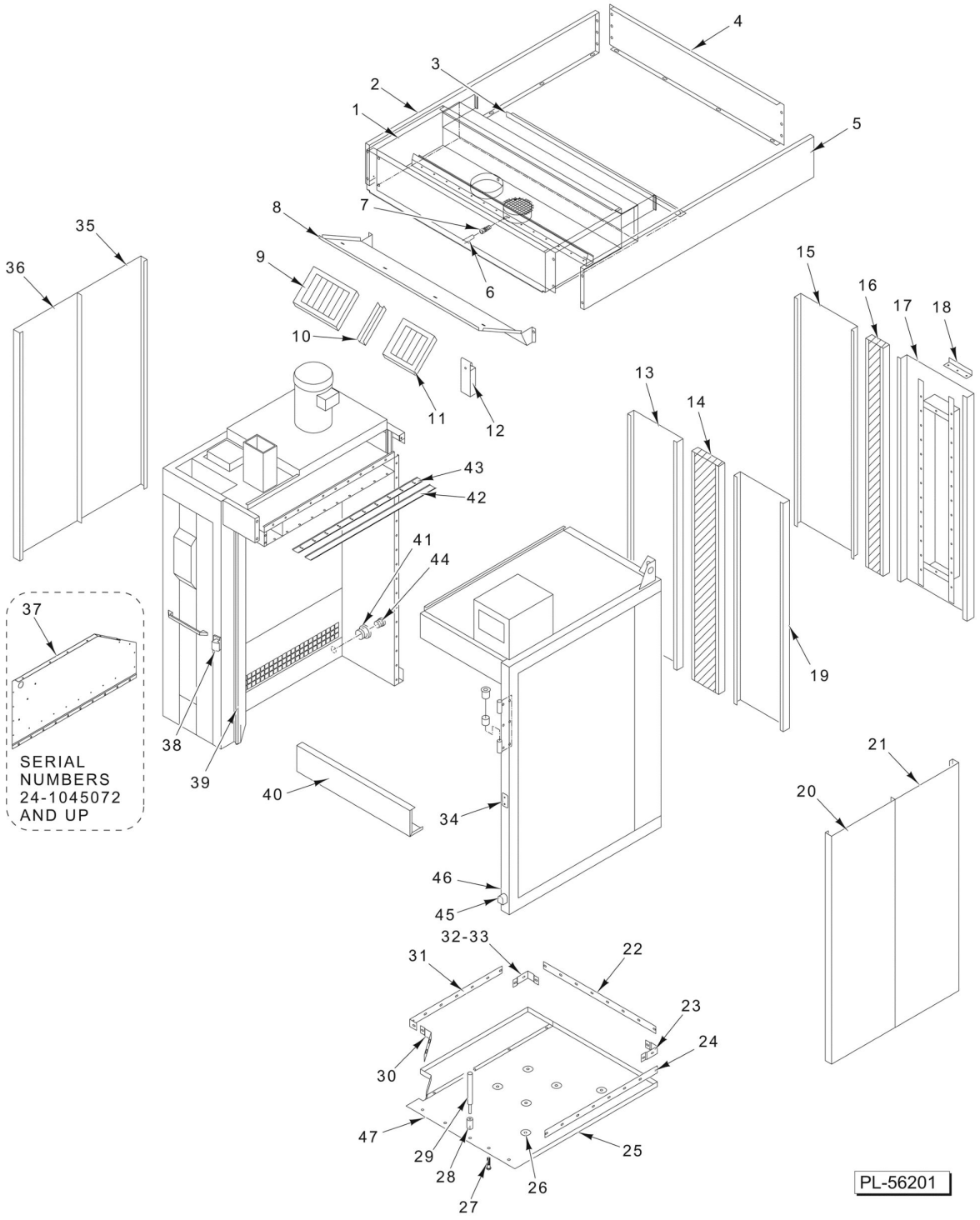

EXTERIOR UNIT (ML-132115)

EXTERIOR UNIT (ML-132115)

ILLUS. PL-56201	PART NO.	NAME OF PART	AMT.
1	01-1M5288-00002	Hood Assy	1
2	01-1M5351-00002	Panel - Side Hood (LH)	1
3	01-1M2341-00002	Angle - Hood Trim	1
4	01-1M5352-00002	Panel - Rear Hood	1
5	01-1M5351-00002	Panel - Side Hood (RH)	1
*6	01-100V17-00004	Tube 1/4 O.D. x 72 In. Lg. (Alum.)	AR
7	FP-078-49	Fitting - Tube (1/4 In.) (Brass)	1
8	01-1M2491-00002	Deflector - Air Hood	1
9	01-100V18-00088	Filter - Hood (16 x 16) (W/Drop)	2
10	01-1M2247-00002	Filler - Filter	1
11	01-100V18-00089	Filter - Hood (16 x 20) (W/Drop)	1
12	01-1M3032-00001	Cup - Hood Grease	1
13	01-1M2120-00004	Skin - Outer	1
14	01-1M5672-00005	Skin - Outer Split Assy	1
15	01-1M2120-00007	Skin - Outer Wall (Optional parts.)	1
16	01-1M2192-00006	Panel - Outer Wall (Optional parts.)	1
17	01-1M2409-00002	Skin - Outer Wall (W/ Window Opening) (Optional parts.)	1
**18	01-1M2408-00001	Angle - Rear Window Trim	2
19	01-1M2120-00004	Skin - Outer	1
20	01-1M2120-00011	Skin - Outer	1
21	01-1M2120-00012	Skin - Outer	1
22	01-1M2072-00003	Trim - Floor	1
23	01-1M2071-00003	Joint - Corner Floor Trim	1
24	01-1M2072-00003	Trim Floor	1
25	01-1M2370-00001	Floor	1
26	01-1M2372-00001	Hold Down - Floor	4
27	01-1000V4-00074	Mach. Screw 1/4-20 x 3/4 Phil. Flat Hd	4
28	01-1000V4-00073	Anchor - Drop-In 1/4-20	9
29	01-1000V4-0073A	Tool - Setting	1
30	01-1M2072-00006	Trim - Floor	1
31	01-1M2072-00005	Trim - Floor	1
32	01-1M2071-00004	Joint - Corner Floor Trim	1
*33	01-100V21-00073	Gasket - Red Silicone (Use with Items 22 thru 25, 30, 31, & 32)	AR
34	01-1M1711-0003C	Plate - Front Cover	1
35	01-1M2120-00011	Skin - Outer	1
36	01-1M2120-00012	Skin - Outer	1
37	01-1M5938-00002	Skin - False Ceiling (From Serial Number 24-1045072 And Up)	1
38	01-1M3236-00001	Strike - Chrome Plated	1
***39	01-100V21-00078	Gasket - Silicone	17
40	01-1M2164-0002A	Skin - Outer Header	1
41	01-100V17-00266	Bushing 3/8 NPT x 3/4 NPT (Brass)	1
***42	01-100V21-00056	Tape - Fiberglass	5
43	01-1M2313-00001	Joint - Ceiling False	1
44	01-100V17-00259	Plug - Pipe 3/8 NPT (Brass)	1
45	01-100V17-00301	Ell 2-1/2 x 45 Deg. Blk	1
46	01-1M2335-00001	Wheel (For Installation)	1
47	01-1M2336-00002	Kit - Floor Extender (Apron)	1
	01-1M2554-00002	Hardware Package	1

* (Sold Per Inch.)
** (Optional parts.)
*** (Sold Per Ft.)

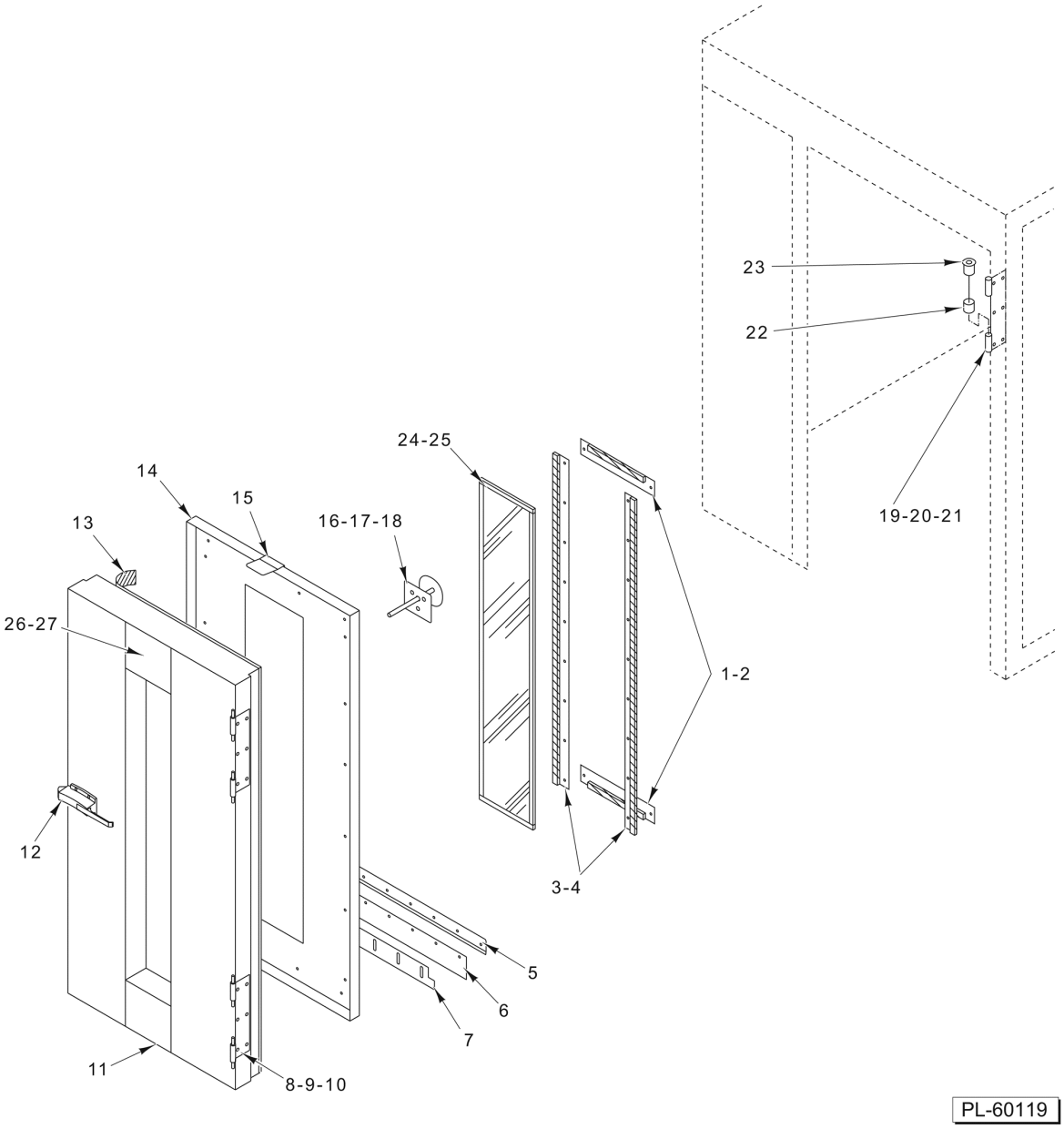

DOOR ASSEMBLY (ML-132113)

DOOR ASSEMBLY (ML-132113)

ILLUS. PL-60119	PART NO.	NAME OF PART	AMT.
1	01-1M2937-00002	Retainer - Window	2
*2	01-100V21-0039A	Tape - Silicone (1/8 x 3/4)	26
3	01-1M2937-00001	Retainer - Window	2
*4	01-100V21-0039A	Tape - Silicone (1/8 x 3/4)	12
5	01-1M2255-00001	Clamp - Floor Sweep	1
6	01-1M2778-00001	Strip - Silicone Floor Seal	1
7	01-1M2769-00001	Support - Floor Seal	1
8	01-1M1738-00001	Hinge - Male Door	2
9	01-1M5918-00002	Hinge Assy. - Door	2
10	01-1M5918-00002	Hinge Assy. - Door	2
11	01-1M2133-00001	Weldment - Door	1
12	01-1M3236-00002	Handle Kit	1
13	01-100V21-00065	Tape - Fiberglass (1/8 x 1) (Sold per Foot) (Sold As Roll)	26
14	01-1M2135-00001	Skin - Inner Door	1
15	01-1M2254-00001	Guide - Door Switch Actuator	1
16	01-1M1435-00002	Handle - Interior Door	1
17	01-1M1435-00002	Spring	1
18	01-1000V1-00036	Ring - Retaining 7/16 In. (Zinc)	1
19	01-1M1739-00001	Hinge - Female Door	2
20	01-1M5918-00001	Hinge - Door (Female) (For Units Built On or After 2/1/07)	2
21	01-1M5918-00002	Hinge Assy. - Door (For Units Built Before 2/1/07)	2
22	01-1000V0-00038	Bearing - Journal (Nylon)	4
23	01-1000V0-00031	Bearing - (Nylon) (W/Shoulder)	4
24	01-100V21-00060	Gasket - Silicone (Sold Per Ft.)	12
25	01-100V16-0102C	Glass - Oven Door	1
26	01-100V16-00197	Label - Black	2
27	01-100V16-0168C	Label - Caution	2
	01-1M5551-00001	Door - Loading (Domestic Crating)	1
	01-1M2469-00008	Door - Loading (Export Crating)	1

* (Sold Per Inch.)

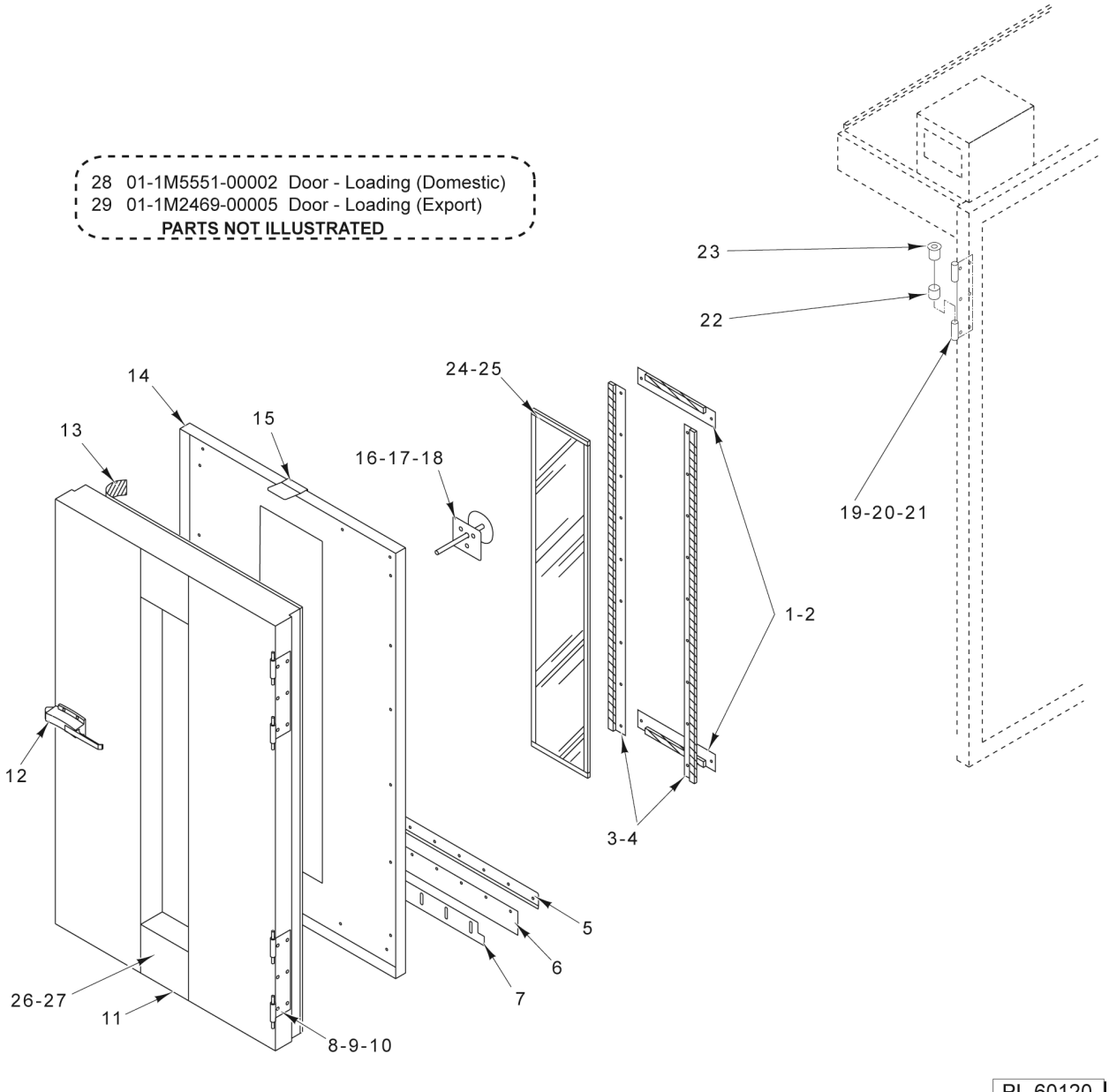

DOOR ASSEMBLY (ML-132115)

DOOR ASSEMBLY (ML-132115)

ILLUS. PL-60120	PART NO.	NAME OF PART	AMT.
1	01-1M2937-00002	Retainer - Window	2
*2	01-100V21-0039A	Tape - Silicone (1/8 x 3/4)	26
3	01-1M2937-00001	Retainer - Window	2
4	01-100V21-0039A	Tape - Silicone (1/8 x 3/4)	12
5	01-1M2255-00002	Clamp - Floor Sweep	1
6	01-1M2778-00002	Strip - Silicone Floor Seal	1
7	01-1M2769-00002	Support - Floor Seal	1
8	01-1M1738-00001	Hinge - Male Door	2
9	01-1M5918-00002	Hinge Assy. - Door (For Units Built On or After 2/1/07)	2
10	01-1M5918-00002	Hinge Assy. - Door (For Units Built Before 2/1/07)	2
11	01-1M2133-00002	Weldment - Door	1
12	01-1M3236-00002	Handle Kit	1
13	01-100V21-00065	Tape - Fiberglass (1/8 x 1) (Sold per Foot)	26
14	01-1M2135-00001	Skin - Inner Door	1
15	01-1M2254-00001	Guide - Door Switch Actuator	1
16		Spring (NLA - Obsolete)	1
17	01-1000V1-00036	Ring - Retaining 7/16 In. (Zinc)	1
18	01-1M1435-00002	Handle - Interior Door (Incls. Items 16 & 17)	1
19	01-1M1739-00001	Hinge - Female Door	2
20	01-1M5918-00001	Hinge - Door (Female) (For Units Built On or After 2/1/07)	2
21	01-1M5918-00002	Hinge Assy. - Door (For Units Built Before 2/1/07)	2
22	01-1000V0-00031	Bearing - (Nylon) (W/Shoulder)	4
23	01-1000V0-00038	Bearing - Journal (Nylon)	4
24	01-100V16-0102C	Glass - Tempered	1
25	01-100V21-00060	Gasket - Silicone (Sold Per Ft.)	12
26	01-100V16-00197	Label - Black	2
27	01-100V16-0168C	Label - Caution	2
28	01-1M5551-00002	Door - Loading (Domestic Crating)	1
29	01-1M2469-00005	Door - Loading (Export Crating)	1

* (Sold Per Inch.)

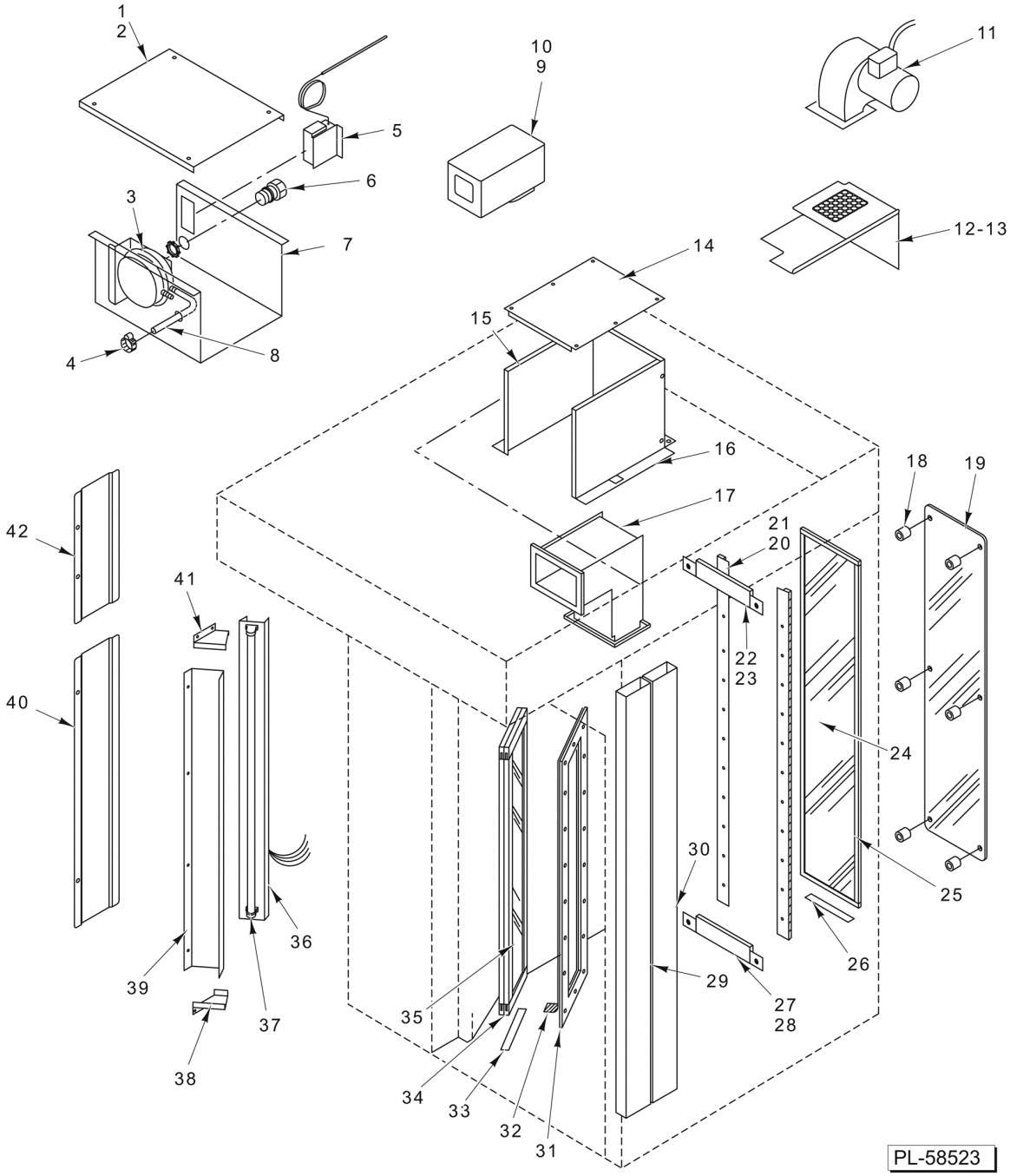

VENTS AND GLASS PANELS

VENTS AND GLASS PANELS

ILLUS. PL-58523	PART NO.	NAME OF PART	AMT.
1	01-1M2216-00001	Cover - Junction Box (ML-132113)	1
2	01-1M2216-00002	Cover - Junction Box (ML-132115)	1
3	01-1M2824-00003	Switch - Pressure Airflow Box (Hood)	1
4	01-1000V1-00018	Clamp - Hose 1/4 I.D. x 7/16 O.D.	2
5	01-1000V6-00118	Thermostat - High Limit	1
6	01-100V11-0088E	Connector - Seal Flex Straight (3/8)	1
7	01-1M2215-00003	Body - Airflow Switch Box	1
8	01-1A1023-00425	Tube - Black (Neoprene)	1
9	01-1M2417-00001	Duct - Exhaust (ML-132113)	1
10	01-1M2417-00002	Duct Exhaust (ML-132115)	1
11	01-1000V8-00060	Blower (115 V.) (Double Rack Units Only)	1
12	01-1M2626-00001	Plate - Blower (M2B Rack Oven)	1
13	01-1M2629-00001	Screen - Blower (M2B Rack Oven)	1
14	01-1M2224-00001	Top - Duct Insulation Cover	1
15	01-1M2223-00001	Body - Duct Insulation Cover	1
16	01-1M2222-00001	Side - Duct Insulation Cover	1
17	01-1M2074-00001	Duct - Vent	1
18	01-1M2411-00001	Spacer - Window	6
19	01-100V16-00207	Window - Outer Wall	1
20	01-1M2937-00001	Retainer - Window	2
*21	01-100V21-0039A	Tape - Silicone (1/8 x 3/4)	12
22	01-1M2937-00002	Retainer - Window	2
*23	01-100V21-0039A	Tape - Silicone (1/8 x 3/4)	13
24	01-100V16-0102C	Glass - Tempered	1
25	01-100V21-00060	Gasket - Silicone (Sold Per Ft.)	12
26	01-1M1430-00004	Strip - Door Window Support	1
27	01-1M2937-00002	Retainer - Window	1
*28	01-100V21-0039A	Tape - Silicone (1/8 x 3/4)	13
29	01-1M2089-00001	Duct - Bottom Vent	1
30	01-1M2566-00001	Duct - Side (ML-132115)	1
31	01-1M1882-00001	Frame - Window	1
*32	01-100V21-0039A	Tape - Silicone (1/8 x 3/4)	5
33	01-1M1430-00003	Strip - Window Support	1
34	01-100V21-00060	Gasket - Silicone (Sold Per Ft.)	19
35	01-100V16-0102E	Glass - Tempered	2
36	01-1M2156-00001	Fixture - Light	1
37		Lamp - Fluorescent (Grainger 3V477)	1
38	01-1M2157-00003	Side - Light Compartment (Lower)	1
39	01-1M2157-00002	Side - Light Compartment (Front)	1
40	01-1M2155-00001	Reflector - Light	1
41	01-1M2157-00004	Side - Light Compartment (Upper)	1
42	01-1M2416-00001	Vent - Light (ML-132113)	1

* (Sold Per Inch.)

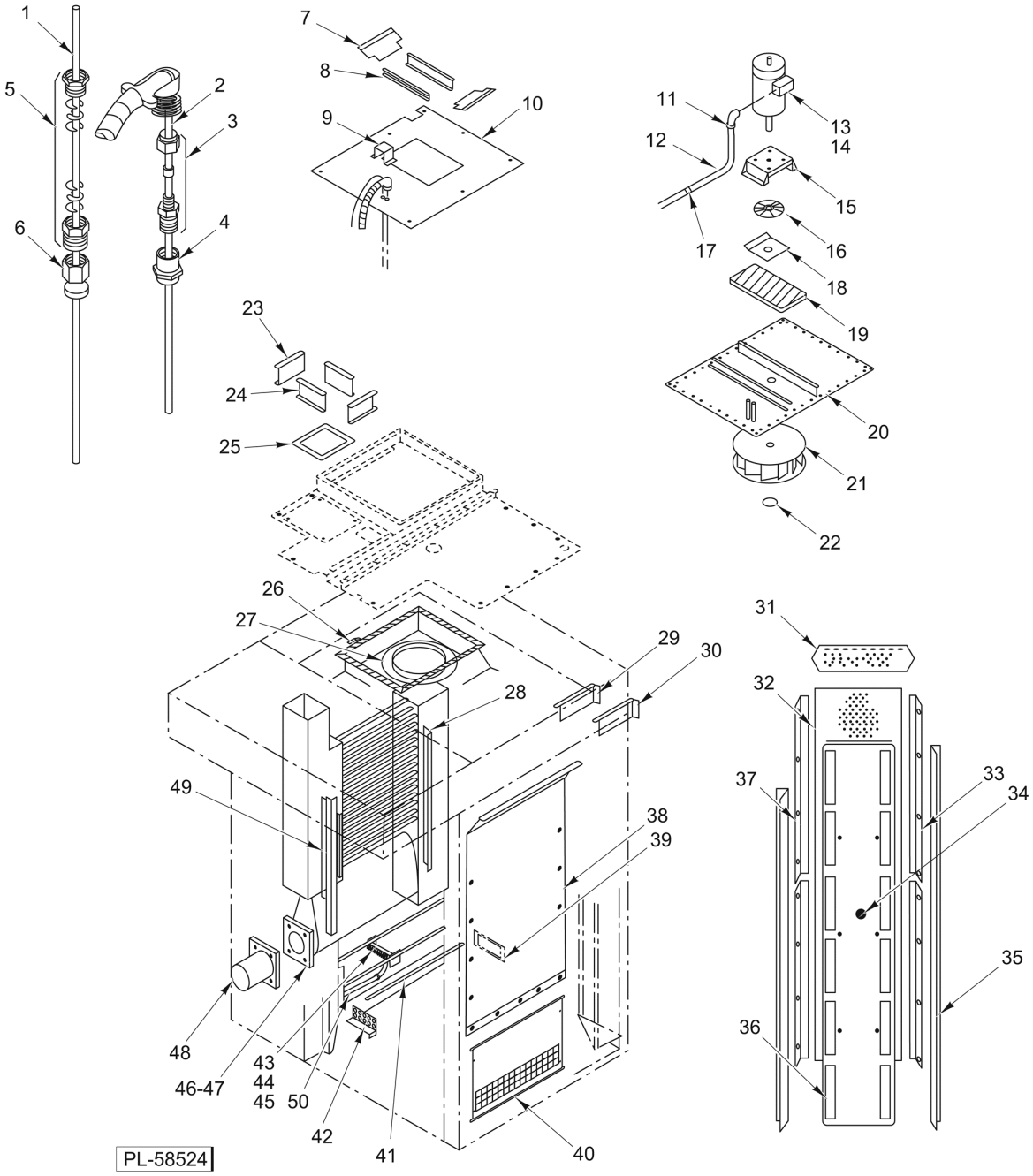

BLOWER AND PANELS (ML-132113)

BLOWER AND PANELS (ML-132113)

ILLUS. PL-58524	PART NO.	NAME OF PART	AMT.
1	01-1000V6-00118	Thermostat - High Limit	1
2	01-1A1828-00001	Kit - Thermocouple	1
3	01-100V17-00279	Fitting 1/4 x 3/16 (Brass)	1
4	01-100V17-00257	Coupling 1/4 NPT (Brass)	1
5	01-100V17-00304	Kit - Stuffing Box	1
6	01-100V17-00281	Coupler - Reducer 3/8 to 1/4 (Brass)	1
7	01-1M1895-00001	Cover - Blower Insulation	2
8	01-1M2227-00001	Liner - Blower Insulation Cover	2
9	01-1M1433-00001	Protector - Thermocouple (Overtemp)	1
10	01-1M5456-00001	Cover - Insulation Blower	1
11	01-100V11-0088E	Connector - Seal Flex (3/8 x 90 Deg.)	1
12	01-1M2385-00001	Conduit - Seal Flex (27 In.)	1
13	01-1000V8-00067	Motor - Blower (1 Ph., 2 Hp.)	1
14	01-1000V8-00052	Motor - Blower (3 Ph., 1-1/2 Hp.)	1
15	01-1M1360-00001	Mount - Blower Motor	1
16	01-1M2458-00001	Heat Slinger Assy	1
17	01-100V11-00073	Clamp - Conduit (1/2)	2
18	01-1M1794-00001	Cover - Blower Insulation	1
19	01-1M1795-00001	Insulation - Blower	1
20	01-1M2059-00001	Weldment - Blower Mount	1
21	01-1000V8-00041	Wheel - Blower (15 In. Dia.)	1
22	01-1000V1-00028	Ring - Snap	1
23	01-1M2087-00001	Retainer - Exhaust Stack Packing	2
24	01-1M2087-00002	Retainer - Exhaust Stack Packing	2
*25	01-100V21-00072	Rope - Glass (3/4 Dia.)	AR
**26	01-100V21-00056	Tape - Fiberglass (Woven)	AR
27	01-1M2451-00001	Bell - Inlet (15 In.)	1
28	01-1M2191-00001	Bracket - Mounting	2
29	01-1M2589-00001	Guide - Ceiling Air	1
30	01-1M2589-00002	Guide - Ceiling Air	1
31	01-1M2101-00004	Z-Bar (Pressure Panel)	1
32	01-1M2572-00001	Screen - Pressure Panel	1
33	01-1M2479-00002	Retainer - Screen (RH)	2
34	01-1M2586-00001	Body - Pressure Panel Shutter Support	1
35	01-1M2563-00001	Wing - Adjustable Air	2
36	01-1M2098-00003	Shutter - Pressure Panel	12
37	01-1M2479-00003	Retainer - Screen (LH)	2
38	01-1M2583-0001G	Panel - Suction (Upper)	1
39	01-1M2195-00001	Spacer - Rebar (Rear)	1
40	01-1M2584-00001	Panel - Suction (Lower)	1
41	01-1M2112-00001	Rebar (5/8-31 In.)	88
42	01-1M2195-00002	Spacer - Rebar (Forward)	1
43	01-1M2355-00006	Manifold - Steam Generator	1
44	01-100V17-00371	Nozzle - Spray Manifold	10
45	01-100V17-00378	Nozzle - Spray Manifold (Dunkin Donuts)	10
46	00-913052-00004	Kit - Hardware (Heat Exchanger)	1
47	01-1M2859-00001	NLA - Obsolete - Exchanger - Heat (Single Gas Rack)	1
48	01-1M2713-00001	Locator - Burner	1
49	01-1M2191-00001	Bracket - Mounting	2
50	01-1M3466-01262	Pipe 1/2 x 12.62 In. (SST)	1
	01-1M2060-00002	Blower Assy. (3 Ph.) (Incls. Items 11 thru 22)	1

* (Sold Per Inch.)
** (Sold Per Foot.)

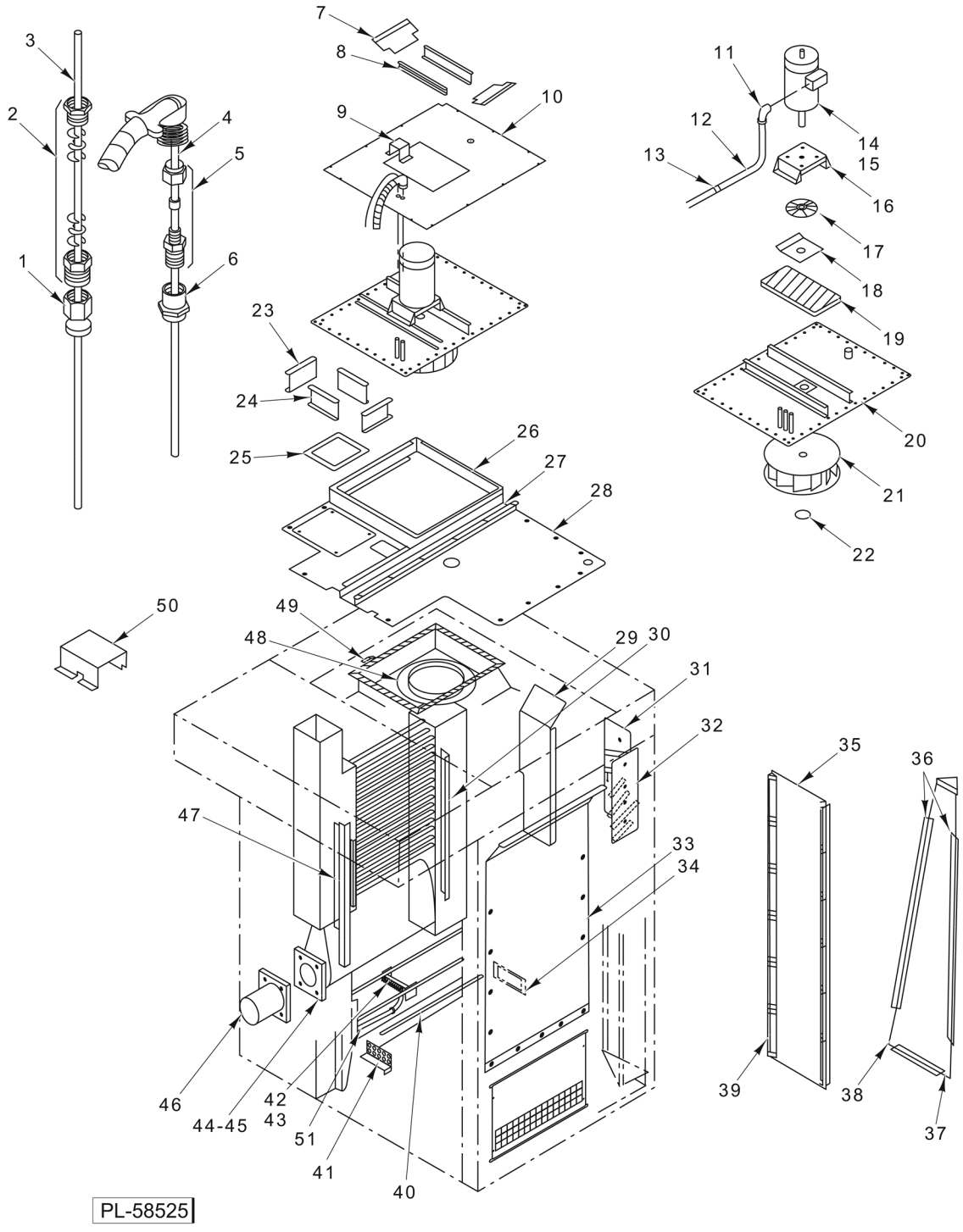

BLOWER AND PANELS (ML-132115)

BLOWER AND PANELS (ML-132115)

ILLUS. PL-58525	PART NO.	NAME OF PART	AMT.
1	01-100V17-00281	Coupler - Reducer 3/8 to 1/4 (Brass)	1
2	01-100V17-00304	Kit - Stuffing Box (Brass)	1
3	01-1000V6-00118	Thermostat - High Limit	1
4	01-1A1828-00001	Kit - Thermocouple	1
5	01-100V17-00279	Fitting 1/4 x 3/16 (Brass)	1
6	01-100V17-00257	Coupling 1/4 NPT (Brass)	1
7	01-1M1895-00001	Cover - Blower Insulation	2
8	01-1M2227-00001	Liner - Blower Insulation Cover	2
9	01-1M1433-00001	Protector - Thermocouple	1
10	01-1M5027-00001	Cover - Blower Insulation	1
11	01-100V11-0088E	Connector - Seal Flex (3/8 x 90 Deg.)	1
12	01-1M2385-00004	Conduit - Seal Flex	AR
13	01-100V11-00073	Clamp - Conduit (1/2)	2
14	01-1000V8-00052	Motor - Blower (3 Ph., 1-1/2 Hp.)	1
15	01-1000V8-00067	Motor - Blower (1 Ph., 2 Hp.)	1
16	01-1M1360-00001	Mount - Blower Motor	1
17	01-1M2458-00001	Heat Slinger Assy	1
18	01-1M1794-00001	Cover - Blower Insulation	1
19	01-1M1795-00001	Insulation - Blower	1
20	01-1M5026-00001	Weldment - Blower Mount	1
21	01-1000V8-00058	Wheel - Blower (18 In. Dia.)	1
22	01-1000V1-00028	Ring - Snap	1
23	01-1M2087-00002	Retainer - Exhaust Stack Packing	2
24	01-1M2087-00003	Retainer - Exhaust Stack Packing	2
*25	01-100V21-00072	Rope - Glass (3/4 Dia.)	AR
26	01-1M2544-00002	Skin - Outer Ceiling	1
27	01-1M2552-00001	Channel - Ceiling Skin Access	1
28	01-1M2211-00002	Skin - Ceiling (RH)	1
29	01-1M2854-00001	Guide - Rear Air	1
30	01-1M2468-00002	Bracket - Upper Suction Panel Mounting (Rear)	2
31	01-1M2557-00001	Guide - Pressure Panel Air (LH)	1
32	01-1M2557-00002	Guide - Pressure Panel Air (RH)	1
33	01-1M2542-0001G	Panel - Upper Suction	1
34	01-1M2195-00003	Spacer - Rebar (Rear)	1
35	01-1M2096-00002	Body - Pressure Panel Shutter Support	1
36	01-1M2560-00002	Retainer - Pressure Panel Side Wall	1
37	01-1M2560-00001	Retainer - Pressure Panel Bottom Wall	1
38	01-1M2579-00001	Wall - Inner Pressure Panel	1
39	01-1M3117-00001	Shutter - Pressure Panel 97 Deg	12
*40	01-1M2112-00002	Rebar - Steam Generator	96
41	01-1M2195-00004	Spacer - Rebar (Forward)	1
42	01-1M2355-00003	Manifold - Steam Generator	1
43	01-100V17-00328	Nozzle - Spray Manifold	12
44	00-913052-00002	Kit - Hardware (Heat Exchanger)	1
45	01-1M2829-00001	NLA - Obsolete - Exchanger - Heat (Double Gas Rack)	1
46	01-1M2713-00001	Locator - Burner	1
47	01-1M2458-00001	Bracket - Upper Suction Panel Mounting (Forward)	2
48	01-1M2451-00002	Bell - Inlet	1
**49	01-100V21-00056	Tape - Fiberglass (Woven)	AR
50	01-1M2553-00001	Cover - Harness	1
51	01-1M3466-01800	Pipe 1/2 x 18 In. (SST)	1
	01-1M5025-00001	Blower Assy. (3 Ph.) (Incls. Items 14 thru 22)	1

* (Sold Per Inch.)
** (Sold Per Foot.)

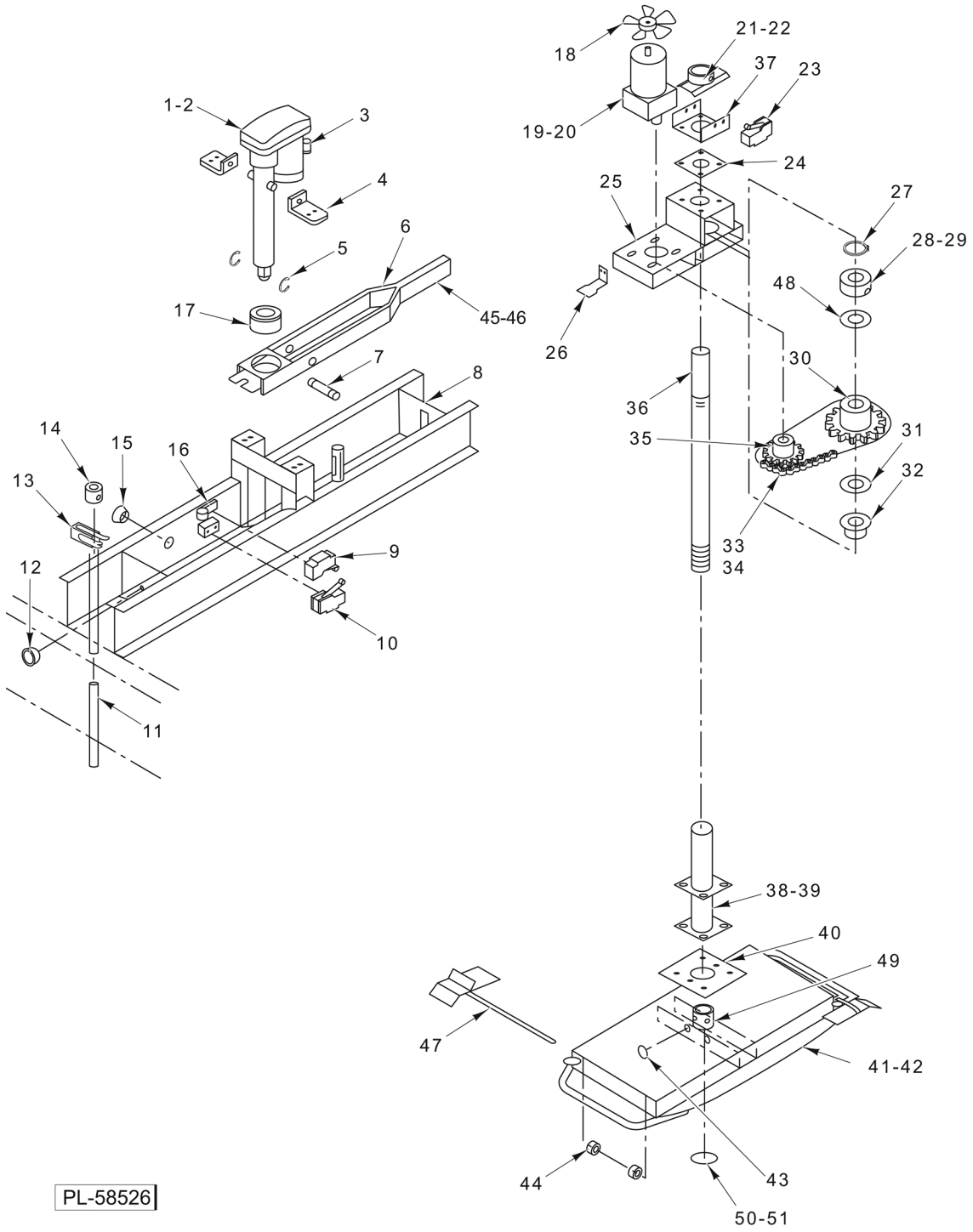

LIFTER/ROTATOR

LIFTER/ROTATOR

ILLUS. PL-58526	PART NO.	NAME OF PART	AMT.
1	01-1M2418-00001	Actuator - Linear	1
2	01-1A1344-00001	Kit - Linear Actuator Brake	1
3	01-1000V8-0046C	Capacitor - Linear Actuator	1
4	01-1M2289-00001	Angle - Linear Actuator Support	2
5	01-1000V1-00037	Ring - Snap 1/2 In. Dia	2
6	01-1M2304-00001	Arm - Lifter	1
7	01-1M2290-00001	Shaft - Pivot (Linear Actuator Support)	1
8	01-1M2298-00001	Weldment - Lifter	1
9	01-1000V6-00065	Microswitch (ML-132113)	1
10	01-1000V6-00065	Microswitch (ML-132115)	1
11	01-1M2765-00001	Rod - Door Switch Actuator	1
12	01-1000V5-00059	Bushing - Snap (Plastic)	1
13	01-1000V6-00065	Microswitch	1
14	01-1M2346-00001	Collar - Door Switch Assy	1
15	01-1000V5-00073	Bushing - Snap	1
16	01-1M2296-00001	Bracket - Microswitch Linear Actuator	1
17	01-1000V0-00051	Bushing - Spherical	1
18	01-1000V8-00056	Blade - Fan 5-1/2 In	1
19	01-1000V8-0049A	Motor - Gear	1
20	01-1A2141-00001	Kit - Capacitor	1
21	01-1M5201-00001	Pointer - Rotator	1
22	01-1M4879-00001	Rotator (C-Lift Stops) (360 Deg.)	1
23	01-1000V6-00001	Micro-Switch	1
24	01-1M1927-00001	Plate - Teflon	1
25	01-1M2114-00001	Weldment - Rotator	1
26	01-1M2489-00001	Actuator - Micro-Switch	1
27	01-1000V1-00004	Ring - Snap (1-1/2 In.)	2
28	01-1M2264-00001	Collar - Set (Lifter)	1
29		Set Screw 3/8-16	1
30	01-1M2228-00001	Sprocket - Rotator Lifter	1
31	01-1000V0-00068	Washer - Rotator Thrust	1
32	01-1000V0-00054	Bearing - Flanged	1
33	01-1000V3-00087	Chain - Roller	1
34	01-1000V3-00088	Link - Connecting	1
35	01-1000V3-00085	Sprocket	1
36	01-1M2797-00001	Shaft - Lifter	1
37	01-1M5085-00001	Plate - Rotator	1
38	01-1M2140-00001	Housing - Rotator Shaft	1
39	01-1000V0-00055	Bearing - Rotator Shaft	2
40	01-1M1899-00001	Clamp - Rotator Housing	1
41	01-1M2796-00001	Carrier - Single Rack B Style (ML-132113)	1
42	01-1M2796-00002	Carrier - Double Rack B Style (ML-132115)	1
43	01-100V15-00048	Plug - Plated (For 0.75 Hole)	2
44	01-1000V1-00013	Collar - Set 1/2 In. Dia	4
45	01-1M2730-00001	Plate	1
46	01-1M2731-00001	Strip (White Teflon)	1
47	01-1M2580-00002	Stop - Rack Carrier	2
48	01-1M2265-00001	Clutch - Slide (Lifter)	1
49	01-1000V4-00199	Set Screw 3/8-24 x 3/8 Allen Hd	4
50	01-1000V1-00004	Ring - Snap (1-1/2 In.)	1
51	01-1M2783-00001	Washer	1
	01-1M2183-00001	Lifter Assy. (ML-132113) (Incls. Items 1 thru 9, 11, 12, 14, & 15)	1
	01-1M2183-00002	Lifter Assy. (ML-132115) (Incls. Items 1 thru 8, 10, 11, & 13 thru 15)	1
	01-1M2796-00001	Carrier Assy. (ML-132113) (Incls. Items 44 & 47)	1
	01-1M2796-00002	Carrier Assy. (ML-132115) (Incls. Items 44 & 47)	1
	01-1M2482-00001	Harness - Lifter	1
	01-1M2229-00002	Rotator Lifter Assy. (Incls. Items 17 thru 37 & 48)	1

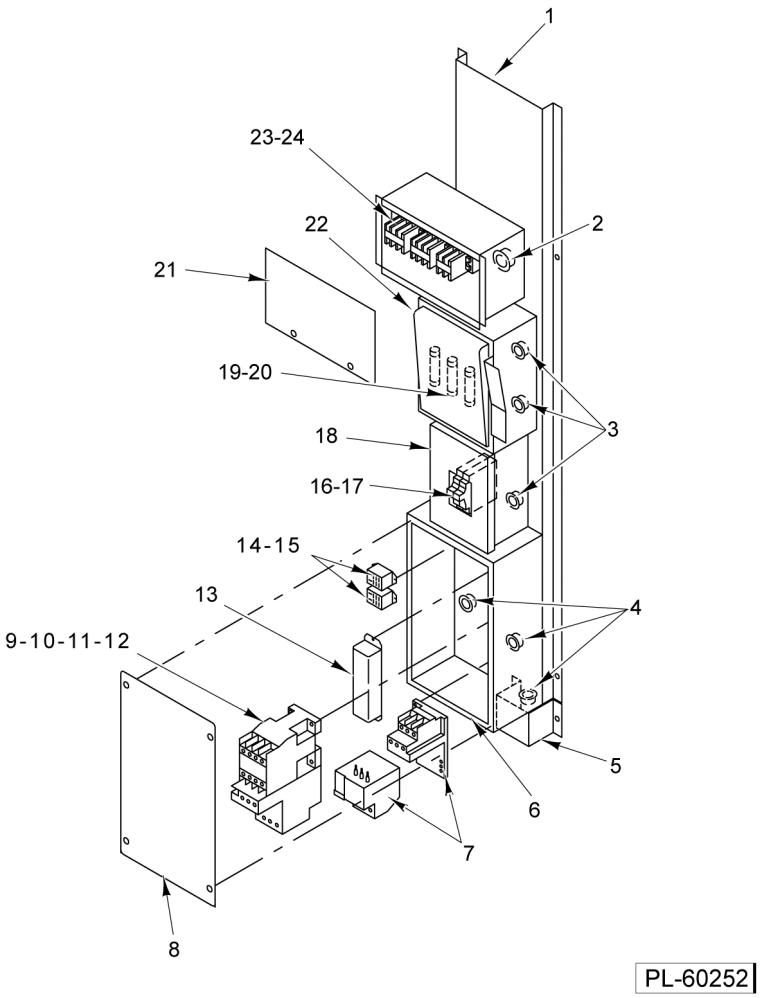

ELECTRIC MODULE

ELECTRIC MODULE

ILLUS. PL-60252	PART NO.	NAME OF PART	AMT.
1	01-1M2236-00001	Mount/Box Weldment Electric Module	1
2	01-1000V5-00035	Bushing - Snap (1 Dia.)	1
3	01-1000V5-00059	Bushing - Snap (Plastic)	3
4	01-1000V5-00073	Bushing - Snap	3
5	01-1M2329-00001	Cover - Burner Harness	1
6	01-1M2238-00001	Box - Electrical	1
7	01-1A1604-00001	Kit - Overload Rotator Lifter	1
8	01-1M2768-00001	Cover - Electrical Box	1
9	01-1000V6-00231	Contactor - Blower Circulation (3 Ph.) (50-60Hz)	1
	01-1000V6-00233	Contactor - Blower Circulation (208-240 V., 1 Ph.)	1
10	01-1000V6-00235	Overload (1.2 - 2.5 Amp.)	1
11	01-1000V6-00232	Overload (4-6 Amp.)	1
12	01-1M5355-00001	Contactor - Overload Kit	1
13	01-1M2906-00001	Ballast - Lamp	1
14	01-1000V6-00070	Relay - D.P.D.T. (1/4 Hp., 120 VAC)	2
15	01-1000V6-00271	Relay - D.P.D.T. (1/2 Hp., 120 VAC)	1
16	01-1000V6-00126	Breaker - Circuit (15 Amp.) (Siemans)	2
17	01-1000V6-00191	Breaker - Circuit (15 Amp., 120/240 V.) (Square D)	1
18	01-100V11-00139	Box - Breaker	1
19	01-100V10-00077	Fuse - Current Limiting (FRNR-15) (208-240 V.)	3
20	01-100V10-00079	Fuse - Current Limiting (Class T) (JJS-15) (480 V.)	1
21	01-1M2237-00001	Cover - Service Entrance	1
22	01-1000V6-00125	Disconnect - Fused (30 Amp.)	1
23	01-1000V5-00106	Strip End - Terminal (600 V.)	3
24	01-1000V5-00105	Strip - Terminal (600 V.)	8
	01-1M2234-00001	Module Electric (Incls. Items 1 thru 22)	1

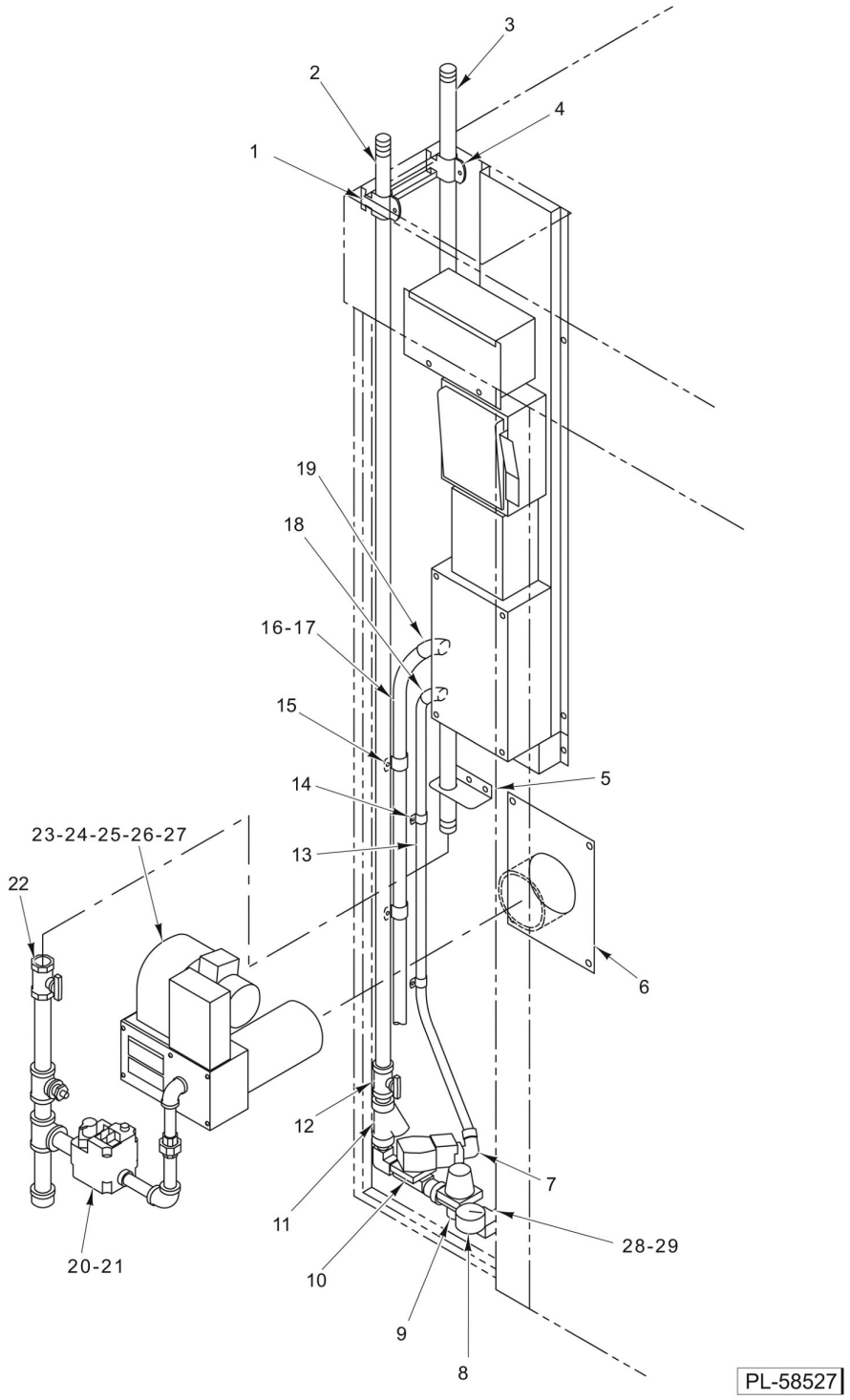

WATER AND GAS SUPPLY

WATER AND GAS SUPPLY

ILLUS. PL-58527	PART NO.	NAME OF PART	AMT.
1	01-100V11-00104	Strap (1/2 Dia. EMT)	1
2	01-1M2314-00001	Pipe - Galvanized (89 In.)	1
3	01-1M2315-00001	Pipe - Black	1
4	01-100V11-00105	Strap 3/4 Dia. EMT	1
5	01-1M1996-00001	Bracket - Gas Inlet	1
6	01-1M2210-00001	Cover Burner Tube	1
7	01-100V11-0088G	Connector - Conduit (3/8 x 90 Deg.)	1
8	01-100V17-00204	Gauge - Pressure (1/4 In. NPT)	1
9	01-100V17-00330	Regulator - Pressure 1/2 NPT (1/2 In. NPT)	1
10	01-100V17-00274	Valve - Solenoid (1/2 In. NPT)	1
11	01-100V17-00275	Strainer - Brass (1/2 In. NPT)	1
12	01-100V17-00089	Valve - Ball 1/2 In. NPTF (Bronze)	1
13	01-1M2385-00004	Conduit - Seal Flex 3/8 Dia	1
14	01-100V11-00073	Clamp - Conduit (1/2)	2
15	01-100V11-00074	Clamp (3/4 EMT)	3
16	01-1M2494-00001	Conduit (3/4 x 60 In.) (Electric)	1
17	01-1M2494-00002	Conduit (3/4 x 80 In.) (Gas)	1
18	01-100V11-0088F	Connector Conduit (3/8 x 45 Deg.)	1
19	01-100V11-0088D	Connector - Seal Flex (3/4 x 90 Deg.)	1
20	00-913102-00169	Kit - Gas Valve & Reducing Bushings	1
21	01-100V17-00429	Bushing - Reducing	1
22	01-100V17-00169	Valve - Shut Off, Gas 3/4 NPT	1
23	01-1M3963-00001	B321 Burner (175k BTU) (NAT) (ML-132113)	1
24	01-1M3963-00002	B321 Burner (250k BTU) (NAT) (ML-132115)	1
25	01-1M3963-00004	Burner (175k BTU) (LP) (ML-132113)	1
26	01-1M3963-00003	B321 Burner (290k BTU) (NAT) (ML-132115)	1
27	01-1M3963-00005	Burner (250k BTU) (LP) (ML-132115)	1
28	01-1M3466-00550	Pipe 1/2 x 5-1/2	1
29	01-100V17-00183	Coupler 1/2 In. (SST)	1
	01-1M2380-00001	Gas Supply Assy. (NAT) (ML-132113) (Incls. Item 22)	1
	01-1M2380-00005	Gas Supply Assy. (LP) (ML-132113) (Incls. Item 22)	1
	01-1M2380-00002	Gas Supply Assy. (NAT) (ML-132115) (Incls. Item 22)	1
	01-1M2380-00006	Gas Supply Assy. (LP) (ML-132115) (Incls. Item 22)	1
	01-1000V9-00127	Valve Kit - LP Conversion	1
	01-1M2379-00001	Supply - Water (Incls. Items 7 thru 12)	1
	01-1M2531-00001	Harness Main	1
	01-1A1851-00001	Burner Kit (175k BTU) (NAT) (ML-132113)	1
	01-1A1851-00002	Burner Kit (250k BTU) (NAT) (ML-132115)	1
	01-1A1851-00003	Burner Kit (290k BTU) (NAT) (ML-132115)	1

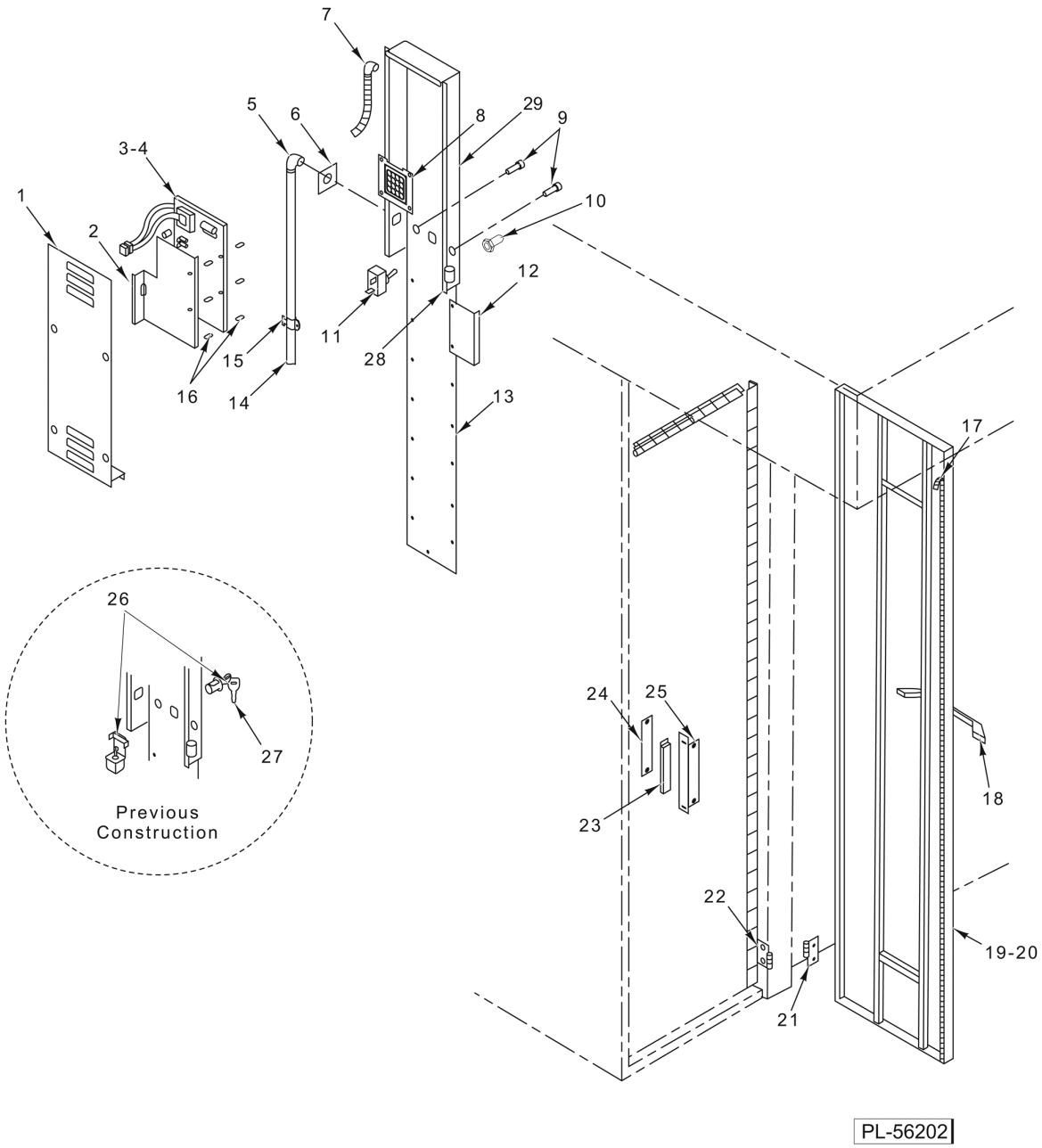

DIGITAL DOOR CONTROL ASSEMBLY

DIGITAL DOOR CONTROL ASSEMBLY

ILLUS. PL-56202	PART NO.	NAME OF PART	AMT.
1	01-1M2281-00001	Cover - Control Panel	1
2	01-1M2596-00001	Shield - PC Board	1
3	01-1M2945-00001	PC Board Assy	1
4		E-Prom Chip (Contact factory with version number.)	1
5	01-100V11-0088D	Connector - Seal Flex (3/4 x 90 Deg.)	1
6	01-1M1937-00001	Plate - Harness	1
7	01-100V11-0030A	Connector - Seal Flex (3/8 x 90 Deg.)	2
8	01-1M2899-00001	Kit - Key Pad	1
9	01-1000V6-00183	Switch - Push Button	2
10	01-1000V4-00019	Boot - Toggle Switch Seal	1
11	01-1000V6-00151	Switch - Toggle	1
12	01-1M2225-00001	Plate - Magnet	1
13	01-1M2151-00001	Plate - Control Panel	1
14	01-1M2494-00002	Conduit (3/4 Dia.)	1
15	01-100V11-00074	Clamp (3/4 EMT)	3
16	01-1000V5-00160	Spacer - Nylon	12
17	01-100V21-00084	Gasket - Silicone (Sold Per Ft.)	7
18	01-100V18-00090	Handle - Chrome	1
19	01-1M2146-00001	Weldment - Control Door (ML-132113)	1
20	01-1M2146-00002	Weldment - Control Door (ML-132115)	1
21	01-1M1934-00002	Hinge - Control Door Male	3
22	01-1M1934-00001	Hinge - Control Door Female	3
23	01-100V16-00055	Magnet	1
24	01-1M1911-00102	Backer - Magnet Holder	1
25	01-1M1911-00101	Body - Magnet Holder	1
26	01-1M2024-00001	Kit - Key Switch Assy. (Previous Construction)	1
27	01-100V18-0087K	Key - On/Off Replacement (Key Only)	1
28	01-100V10-00034	Buzzer - Mini (120 VAC)	1
29	01-100V16-00339	Overlay Control	1
	01-1M2147-00001	Digital Door Control Assy. (ML-132113)	1
	01-1M2147-00002	Digital Door Control Assy. (ML-132115)	1
	01-1M4511-00001	Kit - Toggle Switch Retrofit (Current Construction Style Switch Rework)	1
		Kit - Upgrade (To current HBA/OV500 controls) (Contact factory with serial number)	AR

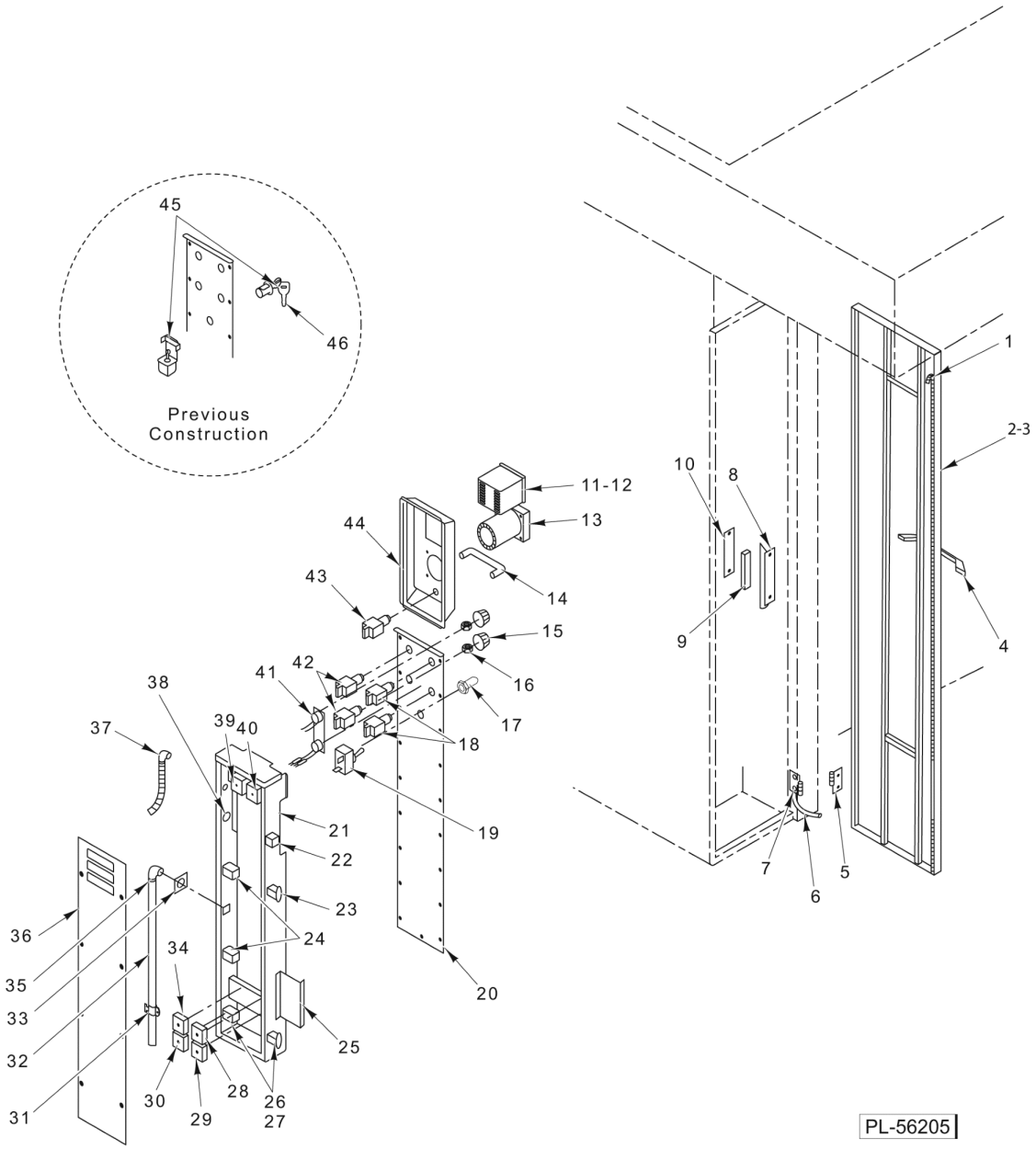

AUTO DOOR CONTROL ASSEMBLY

AUTO DOOR CONTROL ASSEMBLY

ILLUS. PL-56205	PART NO.	NAME OF PART	AMT.
1	01-100V21-00084	Gasket - Silicone (Sold Per Ft.)	7
2	01-1M2147-00001	Weldment - Control Door (ML-132113)	1
3	01-1M2146-00002	Weldment - Control Door (ML-132115)	1
4	01-100V18-00090	Handle - Chrome	1
5	01-1M1934-00002	Hinge - Control Door Male	3
6	01-1M2777-00001	Strap - Ground	1
7	01-1M1934-00001	Hinge - Control Door Female	3
8	01-1M1911-00101	Body - Magnet Holder	1
9	01-100V16-00055	Magnet	1
10	01-1M1911-00102	Backer - Magnet Holder	1
11	01-1M2911-00001	Thermostat - Digital Preset	1
12	01-1A1499-00001	Kit - Thermostat (Digital Preset)	1
13	01-100V10-00071	Timer - 60 Minute	1
14	01-1M2443-00001	Guard - Instrument Control Panel	1
15	01-100V10-00040	Knob	2
16	01-1000V4-00018	Seal - Shaft	2
17	01-1000V4-00019	Boot - Toggle Switch Seal	1
18	01-1000V6-00160	Push Button - Maintained (Green)	3
19	01-1000V6-00151	Switch - Toggle	1
20	01-1M2435-00001	Panel - Lower Control	1
21	01-1M2436-00001	Box - Control Panel Junction	1
22	01-100V10-00034	Buzzer	1
23	01-1M2602-00001	Relay - Auto Door Assy	1
24	01-1000V6-00070	Relay - D.P.D.T. (1/4 Hp., 120 VAC)	4
25	01-1M2442-00001	Plate - Control Door Magnet	1
26	01-1000V6-00070	Relay - D.P.D.T. (1/4 Hp., 120 VAC)	4
27	01-1000V6-00271	Relay - D.P.D.T. (1/2 Hp., 120 VAC)	1
28	01-1M2444-00001	Timer - Control Panel (T2)	1
29	01-1M2444-00002	Timer - Control Panel (T4)	1
30	01-1M2444-00004	Timer - Control Panel (T5)	1
31	01-100V11-00074	Clamp (3/4 EMT)	1
32	01-1M2494-00001	Conduit (3/4 Dia.)	1
33	01-1M1937-00001	Plate - Harness	1
34	01-1M2444-00005	Timer - Control Panel (T6)	1
35	01-100V11-0088D	Connector - Seal Flex (3/4 x 90 Deg.)	1
36	01-1M2438-00001	Cover - Control Panel Junction Box	1
37	01-100V11-0030A	Connector - Seal Flex (3/8 x 90 Deg.)	2
38	01-100V10-00109	Core - Ferrite Torodial	1
39	01-1M2444-00006	Timer (T7)	1
40	01-1M2444-00003	Timer - Control Panel (T3)	1
41	01-1M2472-00001	Assembly - Potentiometer	1
42	01-1000V6-00159	Push Button - Momentary (Green)	2
43	01-1000V6-00160	Push Button - Maintained (Green)	3
44	01-1M2433-00001	Panel - Upper Control	1
45	01-1M2024-00001	Kit - Key Switch Assy. (Previous Construction)	1
46	01-100V18-0087K	Key - On/Off Replacement (Key Only)	1
	01-1M2430-00001	Harness - Digital Control Panel	1
	01-1M2494-00002	Conduit (3/4 Dia.)	1
	01-100V11-00074	Clamp (3/4 EMT)	3
	01-1M2441-00001	Door - Control	1
	01-1M2445-00001	Harness - Control Panel	1
	01-1M4511-00001	Kit - Toggle Switch Retrofit (Current Construction Style Switch Rework)	1

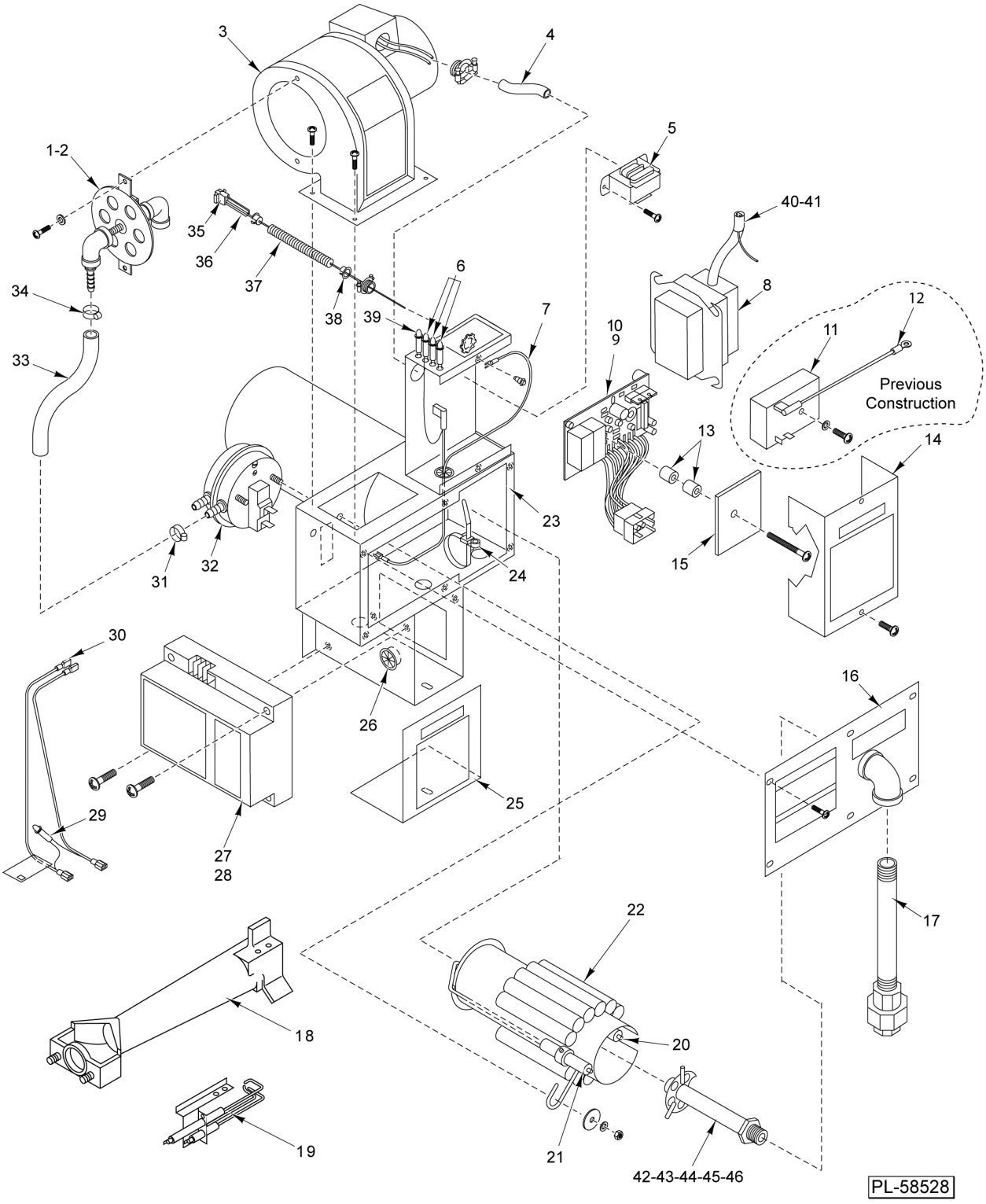

B321 BURNER ASSEMBLY
(CURRENT CONSTRUCTION)

B321 BURNER ASSEMBLY (CURRENT CONSTRUCTION)

ILLUS. PL-58528	PART NO.	NAME OF PART	AMT.
1	01-1M4067-00001	Burner - Air Shutter (ML-132113)	1
2	01-1M4067-00002	Burner - Air Shutter (ML-132115)	1
3	01-1000V8-00060	Blower (115 V.)	1
4	01-1M2699-00200	Hose - Burner Pressure Switch	1
5	01-100V10-00085	Transformer	1
6	01-1000V7-00023	Light - Indicator (Amber) (28 V.)	3
7	01-1A1757-00020	Wire Assembly	1
8	01-100V10-00086	Transformer - Ignition	1
9	01-1M3727-00001	Board - Safety (Current Construction)	1
10	01-1M4106-00001	Kit - Airflow Safety Module (Use With Honeywell S89E Control Only) (Current Construction)	1
11	01-1000V6-00180	Timer - Relay (30 Seconds) (Use W/Fenwell Control Only) (Previous Construction) (If Unit Has Honeywell Module, Use Item 10)	1
12	01-1A1757-00020	Wire Assembly	1
13	01-1000V5-00160	Spacer - Nylon	2
14	01-1M2676-00001	Cover - Control Box	1
15	01-1M3951-00001	Shield - PC Board	1
16	01-1M2695-00001	Cover - Burner Housing	1
17	01-10A981-08-00	Pipe 1/2 x 8 (Black)	1
18	01-1000V9-0101G	Mixer - Venturi (LP)	1
19	01-1000V9-0101C	Ignitor - Direct Spark Burner	1
20	01-1A1644-00001	Kit - Ignition Electrode	1
21	01-1000V9-00119	Flame - Sense Rod	1
22	01-1M2684-00001	Burner - Primary Mixer (NAT)	1
23	01-1M3962-00001	Housing - Burner	1
24	01-1000V5-00022	Tie - Cable	1
25	01-1M2950-00001	Cover - Control Housing	1
26	01-1000V5-00143	Bushing - Snap 5/8	5
27	01-1000V9-00094	Ignition - Electronic Control (Honeywell S89E)	1
28	01-1000V9-00124	Ignition - Control (Fenwell)	1
29	01-1000V7-00023	Light - Indicator (Amber) (28 V.)	1
30	01-1M2951-00001	Wire Assy. - Gas Valve	1
31	01-1000V1-00018	Clamp - Hose 1/4 I.D. x 7/16 O.D.	1
32	01-1M2824-00001	Switch - Pressure	1
33	01-1M2699-00500	Hose	1
34	01-1000V1-00018	Clamp - Hose 1/4 I.D. x 7/16 O.D.	1
35	01-1000V5-00072	Connector - Housing	1
36	01-1M3964-00001	Harness - Wiring	1
37	01-1M2732-00001	Conduit - Control Housing Flex	1
38	01-100V11-00076	Bushing - Anti-Short	2
39	01-1000V7-00022	Light - Indicator (Red) (125 V.)	1
40	01-1M3135-00150	Tube (Orange Silicon Boot)	1
41	01-1M3288-00002	Ignition - Extender Wire (LP)	1
42	01-1M2656-00004	Orifice (0.147 Drill) (NAT) (250,000 BTU) (ML-132115)	1
43	01-1M2656-00005	Orifice (0.177 Drill) (NAT) (290,000 BTU) (ML-132115)	1
44	01-1M2380-00182	Orifice (0.182 Drill) (LP) (ML-132115)	1
45	01-1M2656-00002	Orifice (0.125 Drill) (NAT) (ML-132113)	1
46	01-1M2380-00152	Orifice (0.152 Drill) (LP) (ML-132113)	1

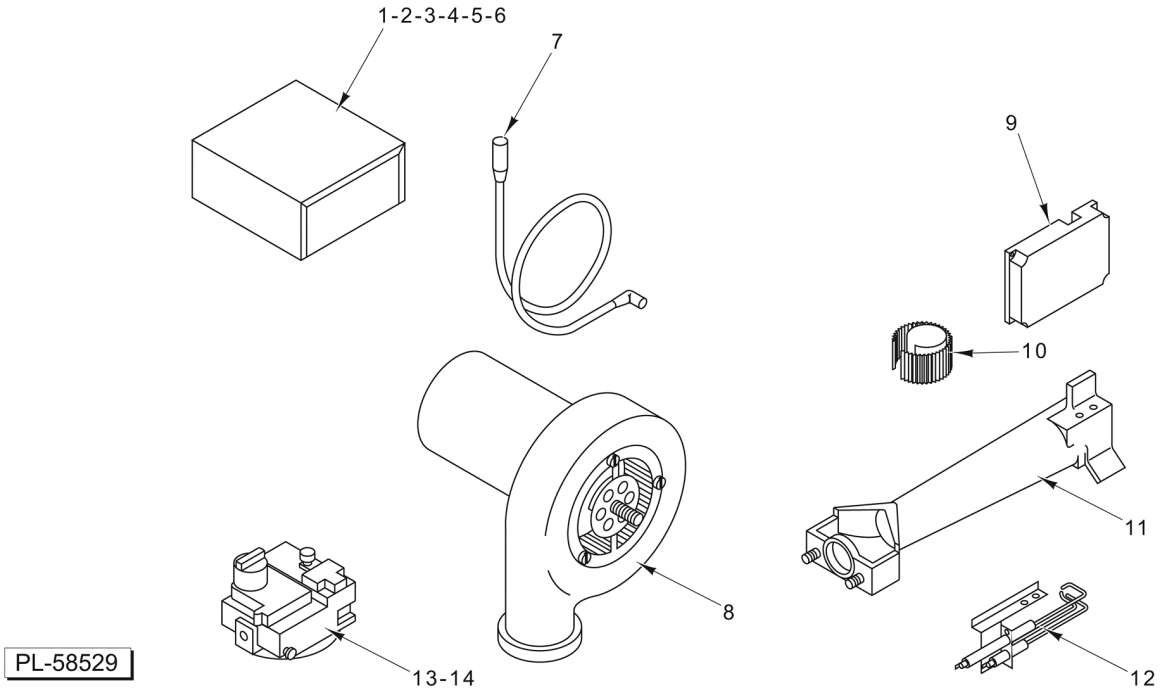

P250 BURNER ASSEMBLY
(PREVIOUS CONSTRUCTION)

P250 BURNER ASSEMBLY
(PREVIOUS CONSTRUCTION)

ILLUS. PL-58529	PART NO.	NAME OF PART	AMT.
1	01-1000V9-0101K	Cover - Control Box	1
2	01-1000V9-0101J	Control Box Assy	1
3	01-1000V6-00134	Relay - Motor (120 V.)	1
4	01-1000V6-00180	Timer - 30 Sec. Delay (Two Terminal)	1
5	01-1000V6-00180	Timer - 30 Sec. Delay (Three Terminal)	1
6	01-100V10-00085	Transformer - Burner	1
7	01-1000V9-0101D	Cable - Ignition High Voltage	1
8	01-1000V9-101-6	Motor - Blower	1
9	01-1000V9-00124	Control - Ignition (24 V.)	1
10	01-1M2530-00001	Ring Flame Retention	1
11	01-1000V9-0101G	Mixer - Venturi	1
12	01-1000V9-0101C	Ignitor - Direct Spark Burner	1
13	00-913102-00169	Kit - Gas Valve & Reducing Bushings	1
14	01-100V17-00429	Bushing - Reducing	1
	01-1M2380-00250	Orifice (0.250 Drill) (NAT) (ML-132113)	1
	01-1M2380-00147	Orifice (0.147 Drill) (LP) (ML-132113)	1
	01-1M2380-00182	Orifice (0.182 Drill) (LP) (ML-132115)	1
	01-100V18-00094	Filter - Air 8-1/4 x 12	1
	01-1M2380-00316	NLA - Obsolete--Orifice (0.316 Drill) (NAT) (ML-132115)	1

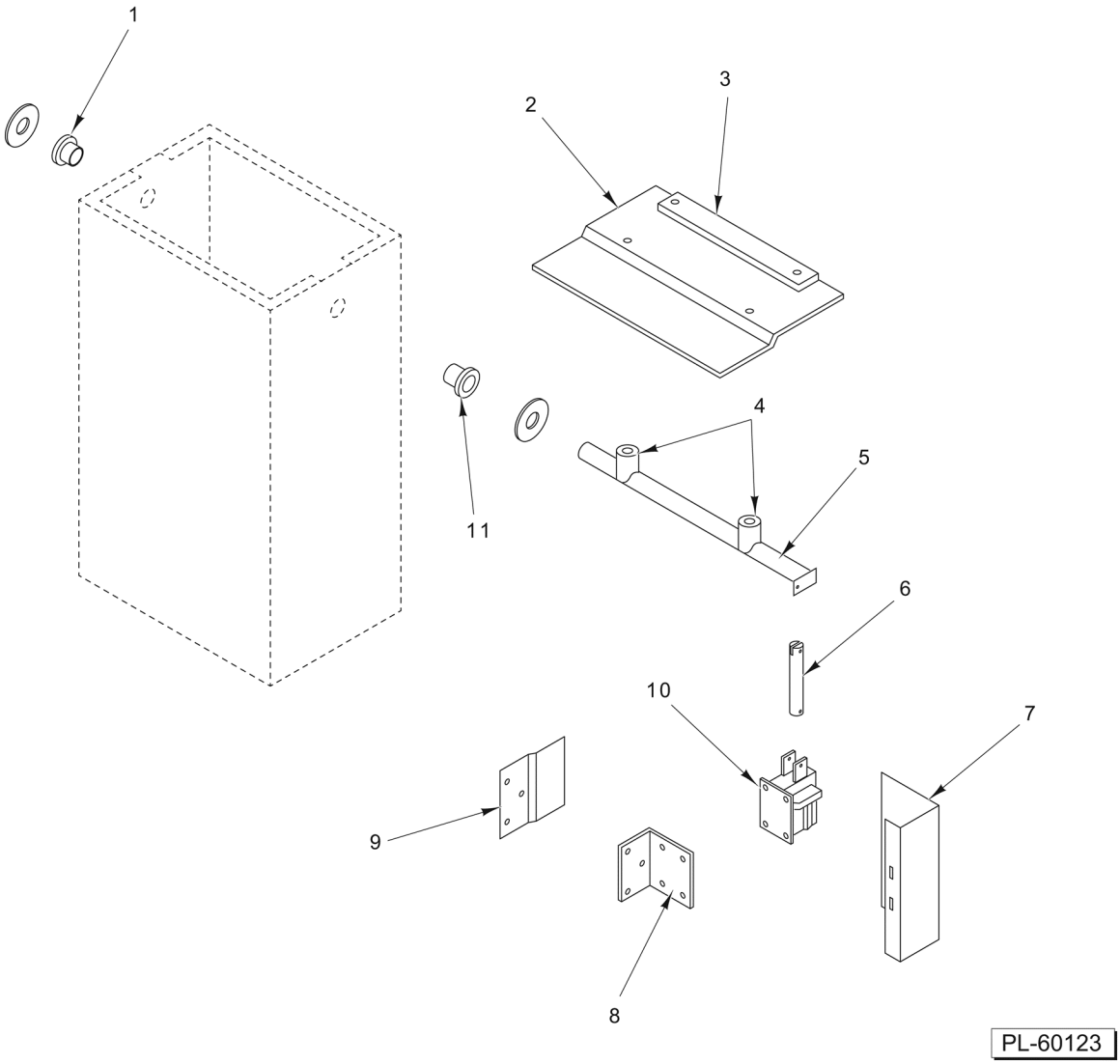

POWER VENT ASSEMBLY

POWER VENT ASSEMBLY

ILLUS. PL-60123	PART NO.	NAME OF PART	AMT.
1	01-1000V0-00058	Bearing	1
2	01-1M2915-00001	Flapper	1
3	01-1M2920-00001	NLA - Obsolete--Counterweight - Flapper	1
4	01-1M2914-00001	NLA - Obsolete--Spacer - Flapper	2
5	01-1M2912-00001	Actuator - Flapper	1
6	01-1M2913-00001	Linkage - Flapper	1
7	01-1M2940-00001	Cover - Solenoid	1
8	01-1M2917-00001	NLA - Obsolete--Bracket - Solenoid	1
9	01-1M2916-00001	NLA - Obsolete--Shield - Solenoid	1
10	01-1000V6-00152	Solenoid - Actuator (120 V.)	1
11	01-1000V0-00058	Bearing	1