CATALOG OF REPLACEMENT PARTS



OV500G2-EE GAS RACK OVEN

ML-132529 **OV500G2-EE**

A product of BAXTER MFG. CO., INC. 19220 STATE ROUTE 162 EAST, ORTING, WA 98360

FORM 43309 Rev. O (October 2024)

 © BAXTER MFG. 2024

Table of Contents

5 COMPONENT BOX (DOUBLE RACK)
7 CONTROL CABINET, DOOR, AND CONTROLLER
9 CABINET (DOUBLE RACK)
11 HOOD (DOUBLE RACK)
13 LOADING DOOR (DOUBLE RACK)
15 OUTER GLASS ASSEMBLY
17 LOADING DOOR (SECURITY)
19 BLOWER, PANELS, AND VENTS (DOUBLE RACK)
21 CEILING AND SHUTTERS
23 DRAFT INDUCER (DOUBLE RACK)
25 LIFTER
27 ROTATOR
29 CARRIER
31 STEAMER ASSEMBLY (DOUBLE RACK)
33 GAS BURNER AND HEAT CIRCULATION (DOUBLE RACK)
35 GAS SUPPLY PLUMBING
37 EXTERIOR WATER SUPPLY

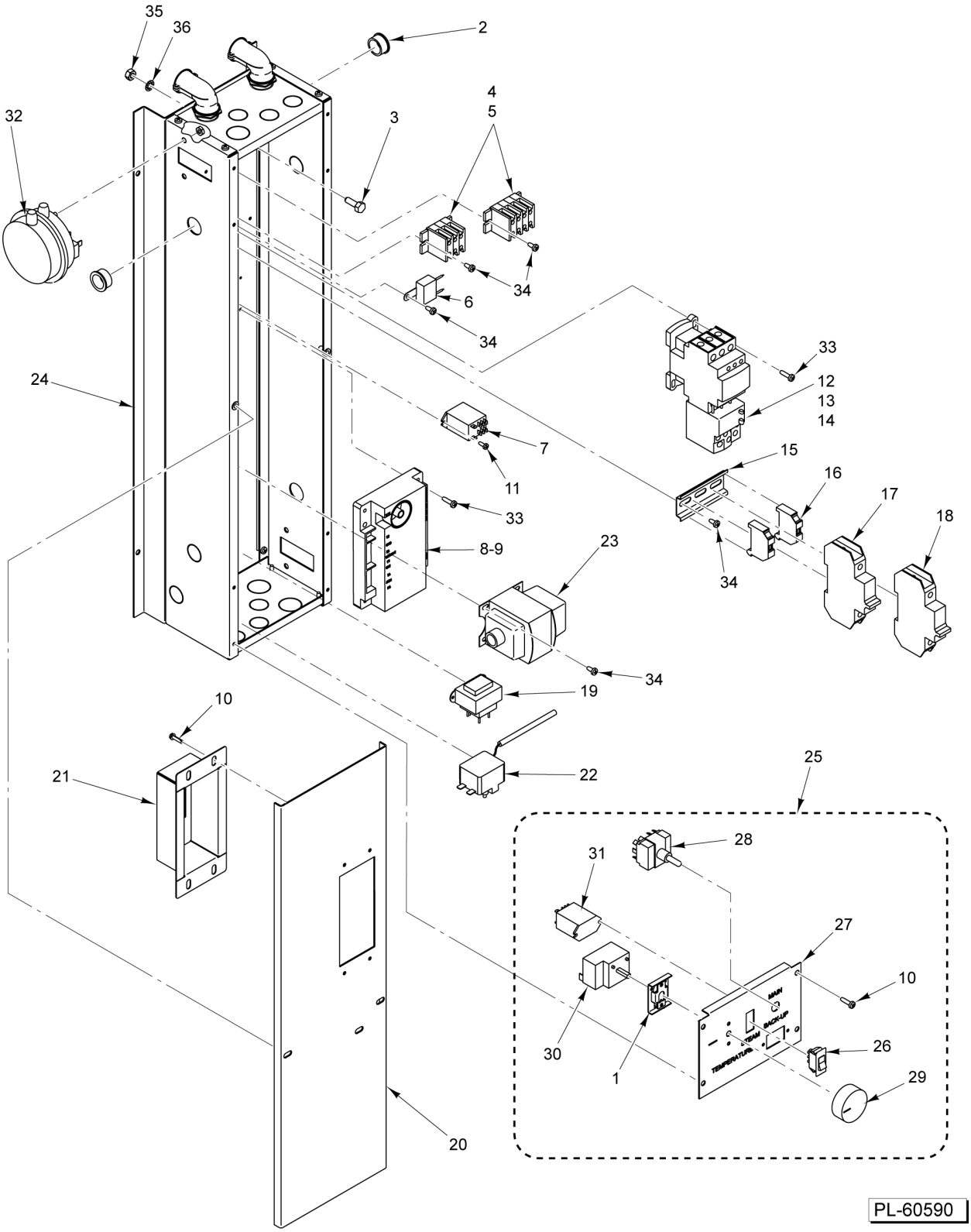

COMPONENT BOX
(DOUBLE RACK)

COMPONENT BOX
(DOUBLE RACK)

ILLUS. PL-60590	PART NO.	NAME OF PART	AMT.
1	01-1M5894-00001	Bracket - Back-Up	1
2	01-1000V5-00059	Bushing - Snap 7/8 In. (Plastic)	2
3	01-1000V5-00101	Lug - Grounding	1
4	01-1000V5-00105	Strip - Terminal (600 V.) (Flat Base)	7
5	01-1000V5-00106	Strip End - Terminal (600 V.) (Flat Base)	2
6	01-100V10-00242	Filter - EMI	1
7	01-1000V6-00271	Relay - D.P.D.T. (1/2 Hp., 120 VAC) (CIT)	1
8	01-1000V9-00202	Control - Ignition (Spark)	1
9	01-100V10-00323	Ignition Wire	1
10	01-1000V4-00474	Screw 10-32 x 1/2 Hex Washer Hd. (Zinc)	AR
11	01-1000V4-00515	Screw - Sheet Metal, Pan Hd. 6-32 x 3/8 (Zinc)	AR
12	01-1M7548-00002	Contactor - Overload Assy. (4-6 Amp.) (208-240 V.) (3 Ph.)	1
13	01-1M7537-00001	Contactor - Overload Assy. (9-13 Amp.) (208-240 V.) (1 Ph.)	1
14	01-1M7549-00002	Contactor - Overload Assy. (1.6 - 2.5 Amp.) (380-415/440-480 V.) (3 Ph.)	1
15	01-100V18-00115	Din Rail (9080-M H) (10 In.) (Sold Per Inch)	AR
16	01-1000V5-00252	Stop - Terminal Section End	2
17	01-1000V6-00423	Circuit Breaker (10A)	2
18	01-1000V6-00424	Circuit Breaker (13A)	1
19	01-100V10-00278	Transformer (5 VA) (120-24 V.) (Door Switch Circuit)	1
20	01-1M5677-00002	Cover - Component Box (Back-Up Controls)	1
21	01-1M5948-00002	Plate - Access Breaker Box	1
22	01-1M6165-00001	Kit, High Limit (608 Deg. F/320 Deg. C) - Manual Reset	1
23	01-100V10-00251	Transformer (120-24 V.) (With Reset)	1
24	01-1M6626-00002	Module - Electric (208-240 V., 3 Ph.) (120 V., 1 Ph.) (Incls. items 1 thru 12, & 15 thru 23)	1
25	01-1M5083-00001	Back-Up Control Unit (Incls. Items 26 thru 32)	1
26	01-1000V6-00221	Switch - MOM Transfer (Back-Up Controls)	1
27	01-1M5084-00001	Plate - Back-Up Control ID (Back-Up Controls)	1
28	01-1000V6-00220	Switch - Toggle 4 PDT (Back-Up Controls)	1
29	01-100V18-00173	Knob - Thermostat (Back-Up Controls)	1
30	01-1000V6-00265	Thermostat - 500 Deg. (Back-Up Controls)	1
31	01-1000V6-00271	Relay - D.P.D.T. (1/2 Hp., 120 VAC) (Back-Up Controls)	1
32	01-1M7679-00001	Kit, Replacement - Hood Pressure Switch	1
33	01-1000V4-00542	Screw - Phil. Hd. 8-18 x 3/4 (Zinc)	AR
34	01-1000V4-00442	Screw Pan Hd. 8-32 x 1/2 (Zinc)	AR
35	01-1000V4-00330	Nut, Hex 1/4-20 (Zinc)	AR
36	01-1000V4-00470	Lockwasher 1/4 In. (SST)	AR

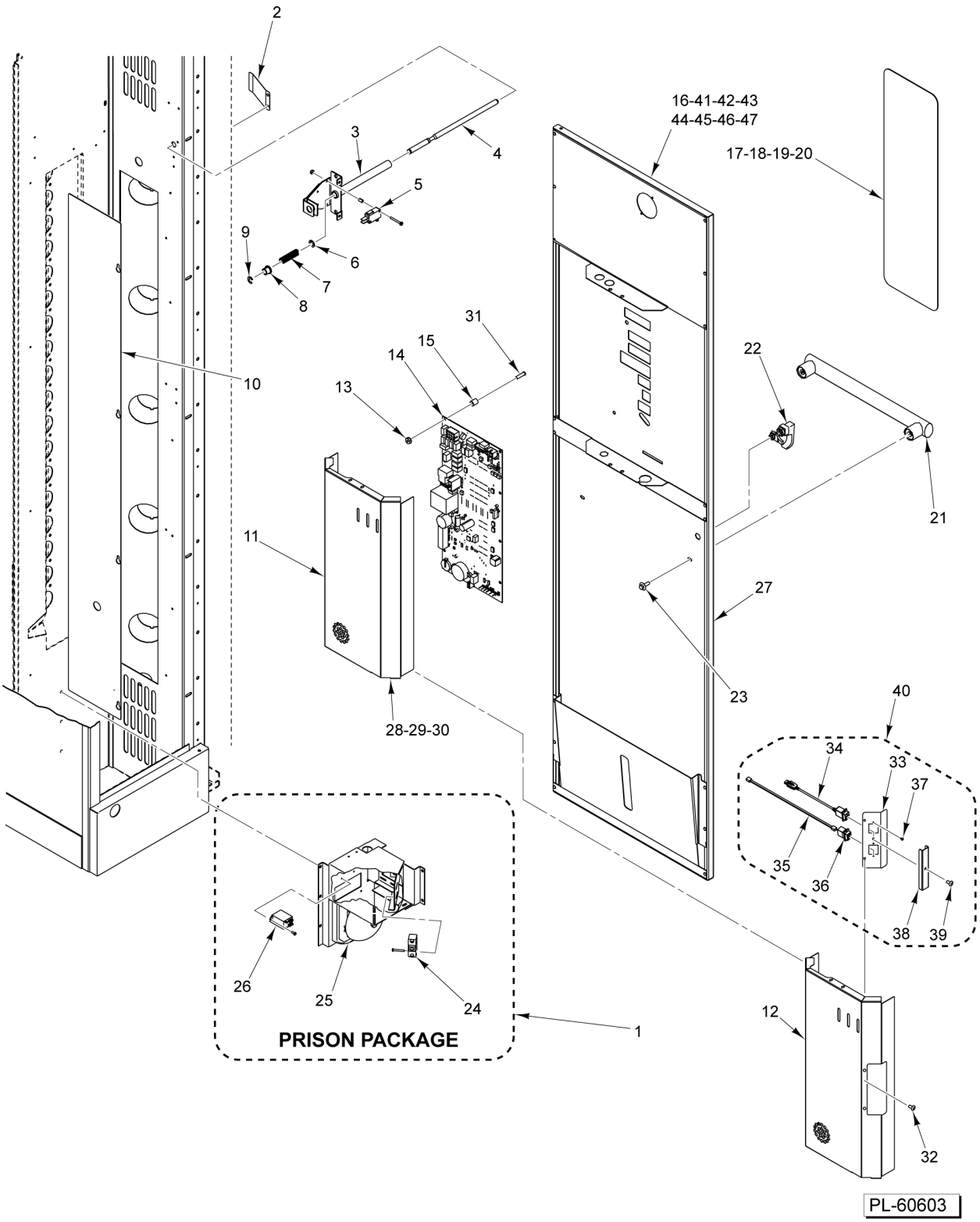

CONTROL CABINET, DOOR, AND CONTROLLER

CONTROL CABINET, DOOR, AND CONTROLLER

ILLUS. PL-60603	PART NO.	NAME OF PART	AMT.
1	01-1M5640-00001	Stop Assy. - Emergency (Incls. Items 24, 25, & 26)	1
2	01-1M6928-00001	Plate, Actuator (Door Switch)	1
3	01-1M6478-00001	Door Switch Assy. (Spring Loaded) (Incls. Items 4 thru 9)	1
4	01-1M6478-00101	Rod - Actuator	1
5	01-1000V6-00343	Switch - Lever SPST	2
6	01-1000V1-00078	Clip - E-Door	1
7	01-100V20-00027	Spring - Compression	1
8	01-1M6478-00103	Bearing (Bronze)	1
9	01-1000V1-00078	Clip - E-Door	1
10	01-1M5150-00001	Cover - Light Access	1
11	01-1M7063-00102	Cover, Control - Display (Before S/N 242026434)	1
*12	01-1M7063-00302	Cover - PCB (W/Comm. Port Opening)	1
13	01-1000V4-00336	Nut #10-32 W/ Lockwasher (SST)	8
14	01-100V16-01036	Board - Control (USB Compatible)	1
15	01-1000V5-00164	Spacer 3/8 x 5/16 Lg. (Nylon)	8
16	01-1M7062-00002	Door - Control Weldment (W/ Studs) (No Overlay)	1
17	01-100V16-00866	Label - Advanced Controls	1
18	01-100V16-00648	EPROM (Advanced)	1
19	01-100V16-0546C	Label (Panera) (Before S/N 242020904)	1
20	01-1M6949-00001	Package - Program Chip (Panera Only) (Before S/N 242020904)	1
21	01-1M6376-00004	Handle - Control Door	1
22	01-100V18-00161	Latch	1
23	01-1000V4-00283	Mach. Screw 1/4-20 x 3/4 Hex Washer Hd. (SST)	AR
24	01-1000V6-00255	Switch - Emergency Stop (Prison Package)	1
25	01-100V10-0003B	Bell (Includes Gong & Body) (Prison Package)	1
26	01-1000V6-00070	Relay - D.P.D.T. (1/2 Hp., 120 VAC)	1
27	01-1M7063-00002	Door Assy. - Control (Incls. Items 11, 13 thru 17, 21, 22, & 23)	1
28	01-100V11-0030A	Connector - Seal Flex (3/8 x 90 Deg.)	2
29	01-100V16-00584	Label - Control Status	1
30	01-1M6078-00001	Kit - Controller Harness	1
31	01-1000V4-00157	NLA - Obsolete--Screw	8
*32	01-1000V4-00400	Cap Screw 10-32 x 3/4 Hex Hd. (SST)	2
*33	01-1M7258-00101	Bracket - Comm. Port	1
*34	01-100V10-00343	USB - Panel Mount (12" Cable)	1
*35	01-100V10-00348	Cable - RJ12 Telephone (12")	1
*36	01-100V10-00344	Jack - RJ12 Panel Mount Coupler	1
*37	01-100V12-00037	Rivet - Push/Lock (Black Plastic)	4
*38	01-1M7258-00201	Cover - USB (Rack Oven)	1
*39	01-1000V4-00284	Screw 10-32 x 3/4 Hex Washer Hd., Serrated Flange (SST)	1
*40	01-1M7258-00002	Communications Port Assy. (Incls. Items 33 thru 39)	1
41	01-100V16-0866P	Label - Advanced Controls (Portuguese)	1
42	01-1000V7-00039	Indicator - Light (Costco)	1
43	01-1M7062-00004	Control Door Assy. (Security) (Incls. Item 17)	1
44	01-1M7063-0002P	Door Assy. - Control (Portuguese) (Incls. Items 11, 13 thru 16, 21 thru 23, & 41)	1
45	01-1M7063-00004	Door Assy. - Control (Security) (Incls. Items 11, 13 thru 16, 21 thru 23, 41, & 43)	1
46	01-1M7063-00006	Door Assy. - Control (Costco) (Incls. Items 11, 13 thru 16, 21 thru 23, 41, & 42)	1
47	01-1M7063-00016	Door Assy. - Control (Costco Austrailia) (Incls. Items 11, 13 thru 16, 21 thru 23, 41, & 42)	1

* Starting S/N 242030444

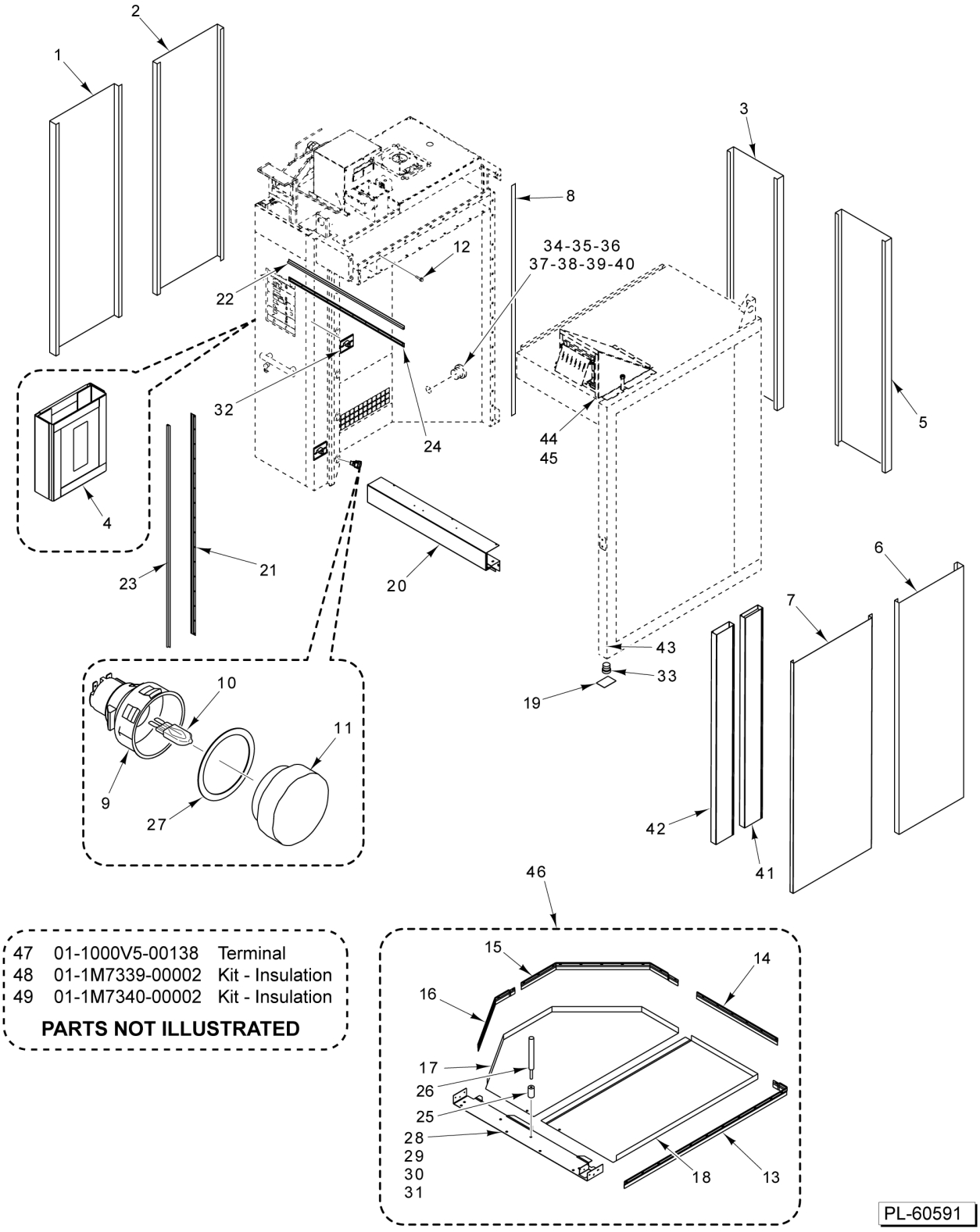

47	01-1000V5-00138	Terminal
48	01-1M7339-00002	Kit - Insulation
49	01-1M7340-00002	Kit - Insulation

PARTS NOT ILLUSTRATED

CABINET
(DOUBLE RACK)

CABINET
(DOUBLE RACK)

ILLUS. PL-60591	PART NO.	NAME OF PART	AMT.
1	01-1M7061-00202	Skin - Outer (22.475 In.)	1
2	01-1M7061-00201	Skin - Outer (28.625 In.)	1
3	01-1M7061-00201	Skin - Outer (28.625 In.)	1
4	01-1P2429-00003	Kit - Thermometer Holder Panel - Outer Wall Split	1
5	01-1M7061-00201	Skin - Outer (28.625 In.)	1
6	01-1M7061-00202	Skin - Outer (22.475 In.)	1
7	01-1M7061-00201	Skin - Outer (28.625 In.)	1
8	01-100V21-0065A	Tape - Fiberglass (1/8 x 1) (With Adhesive) (Sold Per Foot)	AR
9	01-1000V7-00053	Lamp - Oven (Complete) (Lens, Base, & Bulb)	5
10	01-1000V7-00054	Bulb - Halogen G9 Base	AR
11	01-1000V7-0027L	Lens - Glass	AR
12	01-1000V4-00283	Mach. Screw 1/4-20 x 3/4 Hex Washer Hd. (SST)	AR
13	01-1M7105-00201	Trim - Floor Assy. (RH)	1
14	01-1M7105-00202	Trim Assy. - Floor (Rear)	1
15	01-1M7105-00203	Trim - Rear Floor (Left Rear)	1
16	01-1M7105-00204	Trim - Front Floor (Left Front)	1
17	01-1M7102-00002	Skin - Floor (LH)	1
18	01-1M7101-00002	Skin - Floor (RH)	1
19	01-1M5610-00201	Shim - Jamb Plate	AR
20	01-1M7031-00002	Header - Loading Door (Top)	1
21	01-1M7090-00202	Retainer - Gasket (Loading Door)	2
22	01-100V16-0789B	Gasket - Loading Door (Horizontal) (45.31 In.)	1
23	01-100V16-0789A	Gasket - Loading Door (Vertical) (75.25 In.)	2
24	01-1M7090-00201	Retainer - Gasket (Horizontal)	1
25	01-1000V4-00073	Anchor - Drop-In 1/4-20	1
26	01-1000V4-0073A	Tool - Setting (1/4 In.)	1
27	01-1000V7-0027G	Gasket	AR
28	01-1M7047-00201	Threshold Weldment	1
29	01-1000V4-00221	Mach. Screw 1/4-20 x 1/2 Phil. Flat Hd. (SST)	AR
30	01-1000V4-00222	Mach. Screw 1/4-20 x 3/4 Phil. Flat Hd. (SST)	AR
31	01-1000V4-00223	Mach. Screw 1/4-20 x 1 Phil. Flat Hd. (SST)	AR
32	01-1M6116-00002	Ramp Lock - Weldment	2
33	01-100V17-00259	Plug - Pipe 3/8 NPT (Brass)	1
34	01-100V17-00183	Coupler 1/2 In. (SST)	1
35	01-100V17-00533	Pipe 6-1/2 x 1/2 (SST)	1
36	01-100V17-00650	Pipe 3/4 x 2-1/2 NPT (Non-Rear Drain)	1
37	01-100V17-00732	Pipe 48-1/2 In	1
38	01-100V17-00516	Elbow - Street 3/4 x 90 Deg. (Rear Drain)	1
39	01-100V17-00517	Fitting 3/4 (Rear Drain)	1
40	01-100V17-00518	Tube 3/4 x 60 In. (Copper) (Rear Drain)	1
41	01-1M2566-00001	Duct - Side (Rear)	1
42	01-1M2089-00001	Duct - Bottom Vent (Front)	1
43	01-1M2335-00001	Wheel (For Installation)	1
44	01-1M7049-00002	Ceiling Assy. - False (LH)	1
45	01-1M7049-00004	Ceiling Assy. - False (RH)	1
46	01-1M7104-00002	Kit - Floor (With Install Hardware) (Incls. Items 13 thru 18)	1
47	01-1000V5-00138	Terminal - Straight Female Insulated	AR
48	01-1M7339-00002	Kit - Insulation, Package	1
49	01-1M7340-00002	Kit - Insulation, Oven (Split Bag)	1

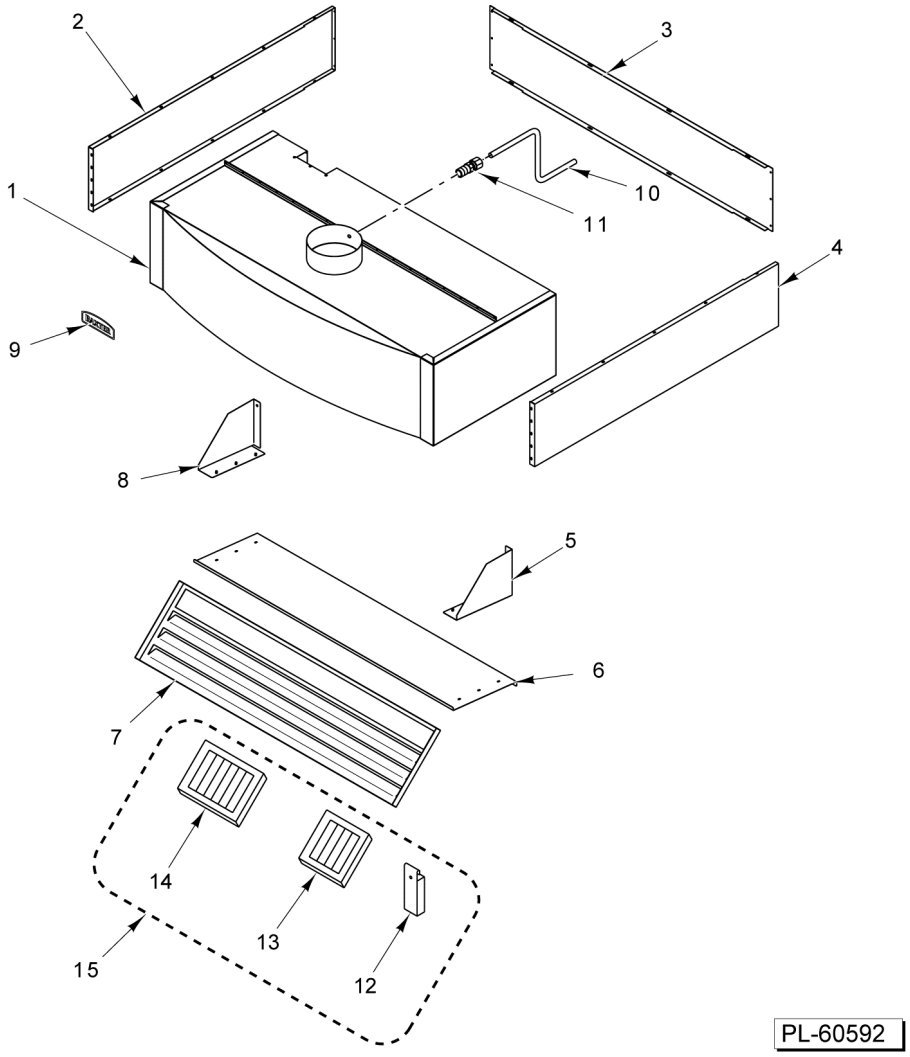

HOOD
(DOUBLE RACK)

HOOD
(DOUBLE RACK)

ILLUS. PL-60592	PART NO.	NAME OF PART	AMT.
1	01-1M7121-00004	Hood - Crated Assembly (Curved 30 In.)	1
2	01-1M6115-00201	Trim - Side	1
3	01-1M6115-00202	Trim - Rear	1
4	01-1M6115-00201	Trim - Side	1
5	01-1M7125-00001	Bracket - Plenum (Left)	1
6	01-1M7124-00002	Plenum - Hood	1
7	01-1M7123-00002	Baffle - Hood	1
8	01-1M7125-00002	Bracket - Plenum (Right)	1
9	01-100V16-0772B	Nameplate - Baxter Curved (9 In.)	1
10	01-100V17-00004	Tube 1/4 O.D. x 100 In. Lg. (Alum.) (Sold Per Inch)	AR
11	FP-078-49	Fitting - Tube (1/4 In.) (Brass)	1
12	01-1M3032-00001	Cup - Hood Grease	1
13	01-100V18-00089	Filter - Hood (16 x 20 W/Drop)	1
14	01-100V18-00088	Filter - Hood (16 x 16 W/Drop)	3
15	01-1M5931-00002	Kit - Grease Filter (Incls. Items 12, 13, & 14)	1

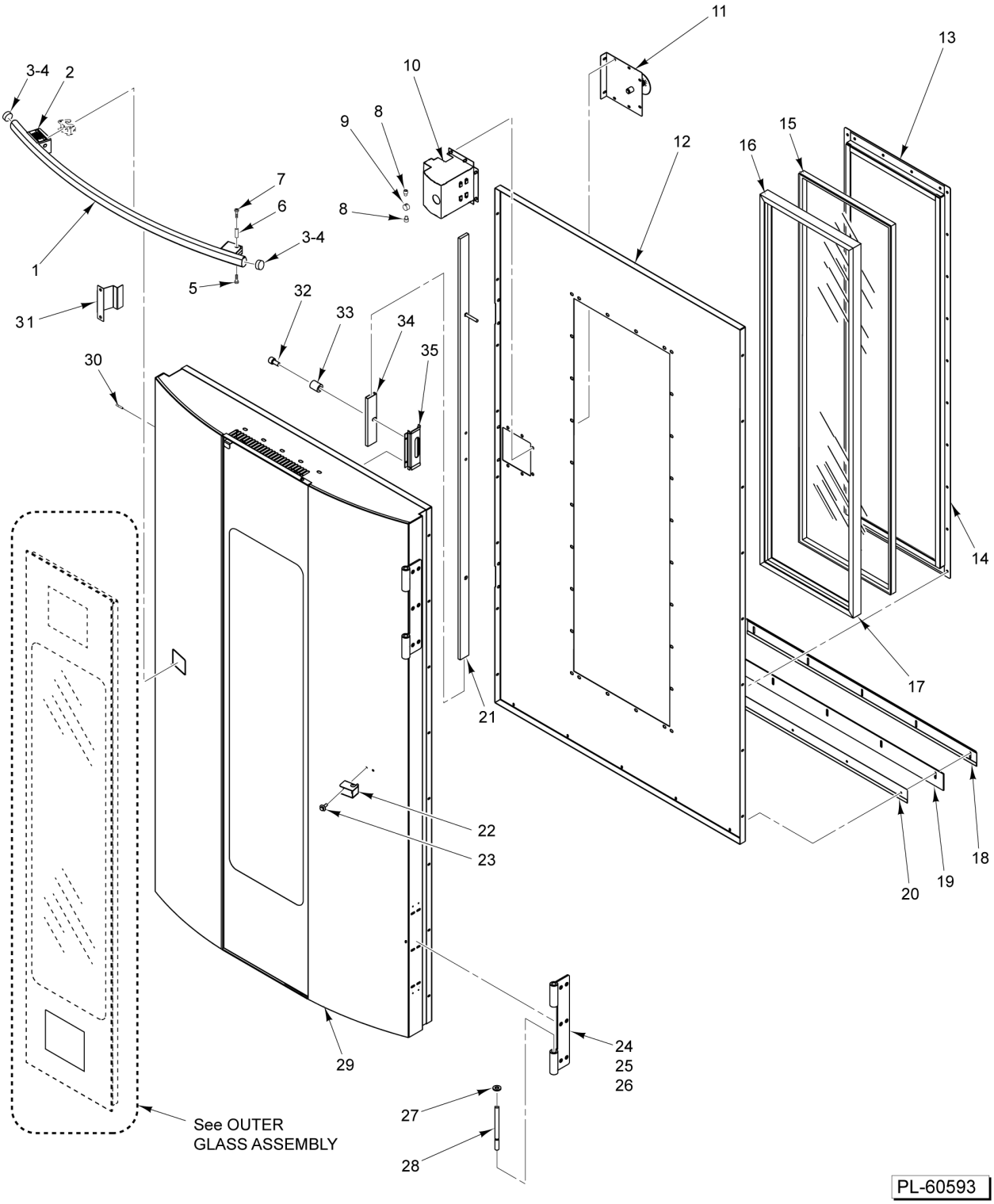

LOADING DOOR
(DOUBLE RACK)

LOADING DOOR
(DOUBLE RACK)

ILLUS. PL-60593	PART NO.	NAME OF PART	AMT.
1	01-1M7081-00002	Handle - Loading Door (Incls. Items 2 & 3)	1
2	01-100V16-00259	Label - Warning	2
3	00-913135-00228	Plug - Snap In (Round)	2
4	01-1M6103-0203B	Cap - End (Door Handle) (Oval)	AR
5		Machine Screw 1/4-20 Phillips Flt Hd	1
6	01-1M6101-00115	Pin - Handle Hinge (Curved)	1
7		Machine Screw 1/4-20 Phillips Flt Hd	1
8	01-1000V4-00369	Cap Screw 1/4 x 1/4 Hex Socket Hd. (Zinc-Plated)	AR
9	01-1M6101-00102	Plug - Handle Mount	1
10	01-1M7095-00001	Latch Assy. (Mechanism)	1
11	01-1M7343-00005	Handle - Interior Door	1
12	01-1M7093-00201	Skin - Inner Door	1
13	01-1M6106-00002	Retainer - Window Horizontal	2
14	01-1M6105-00001	Retainer - Window Vertical	2
15	01-100V16-00765	Glass - Double Pane	1
16	01-100V16-00766	Gasket - Window (One-Piece Fused Corners) (DBL Pane)	AR
17	01-100V16-00766	Gasket - Window (One-Piece Fused Corners)	1
18	01-1M6101-00203	Sweep - Outer Door	1
19	01-100V16-0779B	Gasket - Door Sweep	1
20	01-1M6101-00202	Sweep - Inner Door	1
21	01-1M7099-00001	Bar - Lock	1
22	01-1M7093-00202	Bracket - Handle Pivot	1
23	01-1000V4-00283	Mach. Screw 1/4-20 x 3/4 Hex Washer Hd. (SST)	2
*24	01-1M5918-00004	Hinge Kit (Incls. Item 25 thru 28)	2
25	01-1M5918-00301	Hinge - Door (Female)	2
26		Set Screw 10-32 x 1/4 Hex Hdls., Cup Pt	4
27	01-1000V0-00080	Bearing - Door Hinge (Brass)	4
28	01-1M5918-00201	Pin - Hinge Loading Door	4
29	01-1M6199-00004	Door Assy. (Crated)	1
30	01-100V12-00008	Rivet	8
31	01-1M6526-00001	Bracket - Actuator, Door Switch	1
32	01-1000V0-00135	Bearing - Door Latch Roller	2
33	01-1M7093-00103	Sleeve - Roller	1
34	01-1M6101-00210	Bearing - Lock Bar	2
35	01-1M6101-00109	Lock - Retainer Bar	1

* (Kit includes quantity for one hinge assembly)

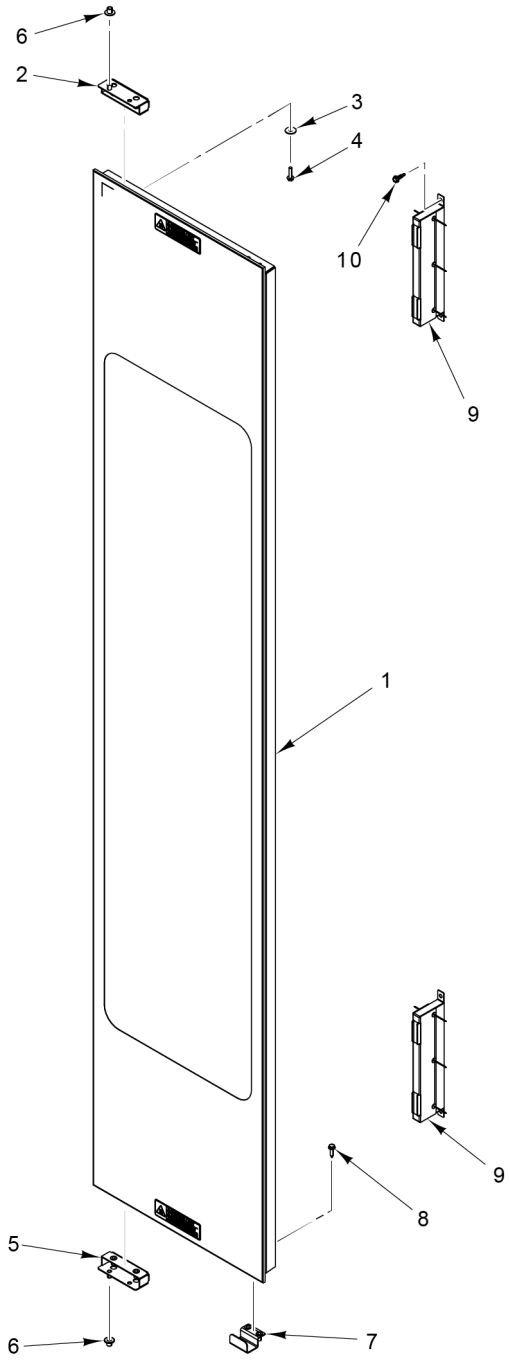

FOR OVENS PRODUCED BEFORE S/N 242038935

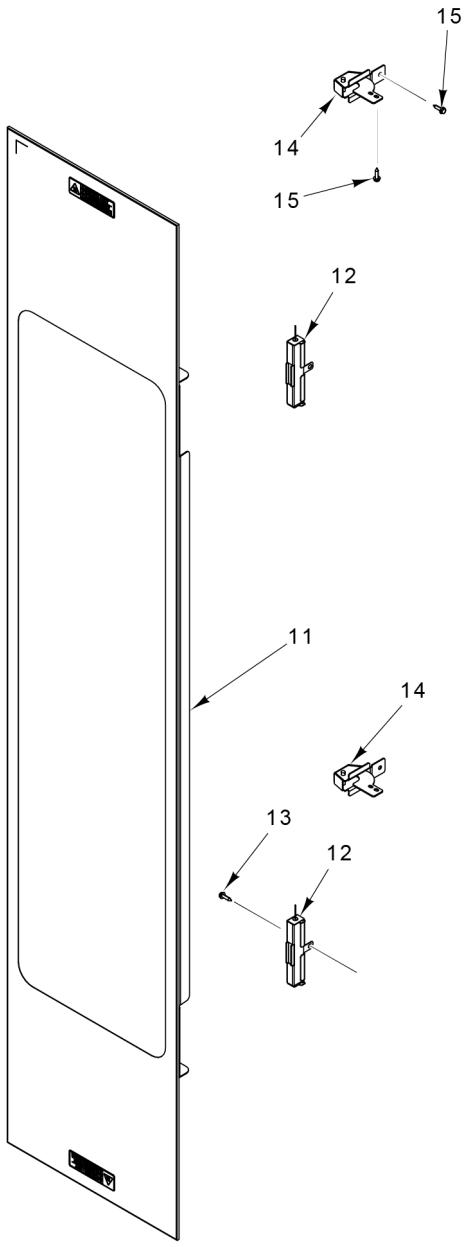

FOR OVENS PRODUCED ON OR AFTER S/N 242038935

PL-61620

OUTER GLASS ASSEMBLY

OUTER GLASS ASSEMBLY

ILLUS. PL-61620	PART NO.	NAME OF PART	AMT.
*1	01-1M6946-00001	Kit - Outer Door Glass Assy. (Incls. Items 2 thru 5, 7, & 8)	1
*2	01-1M6110-00003	Pivot - Top	1
*3	01-1000V0-00434	Washer	AR
*4	01-1000V0-00284	Screw	AR
*5	01-1M6110-00002	Pivot - Bottom	1
*6	01-1000V0-00095	Bearing - Glass Pivot Sleeve	2
*7	01-1M6110-00005	Bracket (Glass Handle)	1
*8	01-1000V4-00400	Cap Screw 10-32 x 3/4 Hex Hd. (SST)	2
*9	01-1M6149-00002	Magnet - Outer Door Weldment (Double)	2
*10	01-1000V4-00426	Screw #10-16 x 3/4 Hex Hd. (Drill Tip) (SST)	4
**11	01-1M6946-00002	Kit - Outer Door Glass Assy	1
**12	01-1M7433-00002	Magnet	2
**13	01-1000V4-00400	Cap Screw 10-32 x 3/4 Hex Hd. (SST)	2
**14	01-1M7434-00002	Hinge Assy	2
**15	01-1000V4-00400	Cap Screw 10-32 x 3/4 Hex Hd. (SST)	6

* For Ovens Produced Before S/N 242038935
** For Ovens Produced On or After S/N 242038935

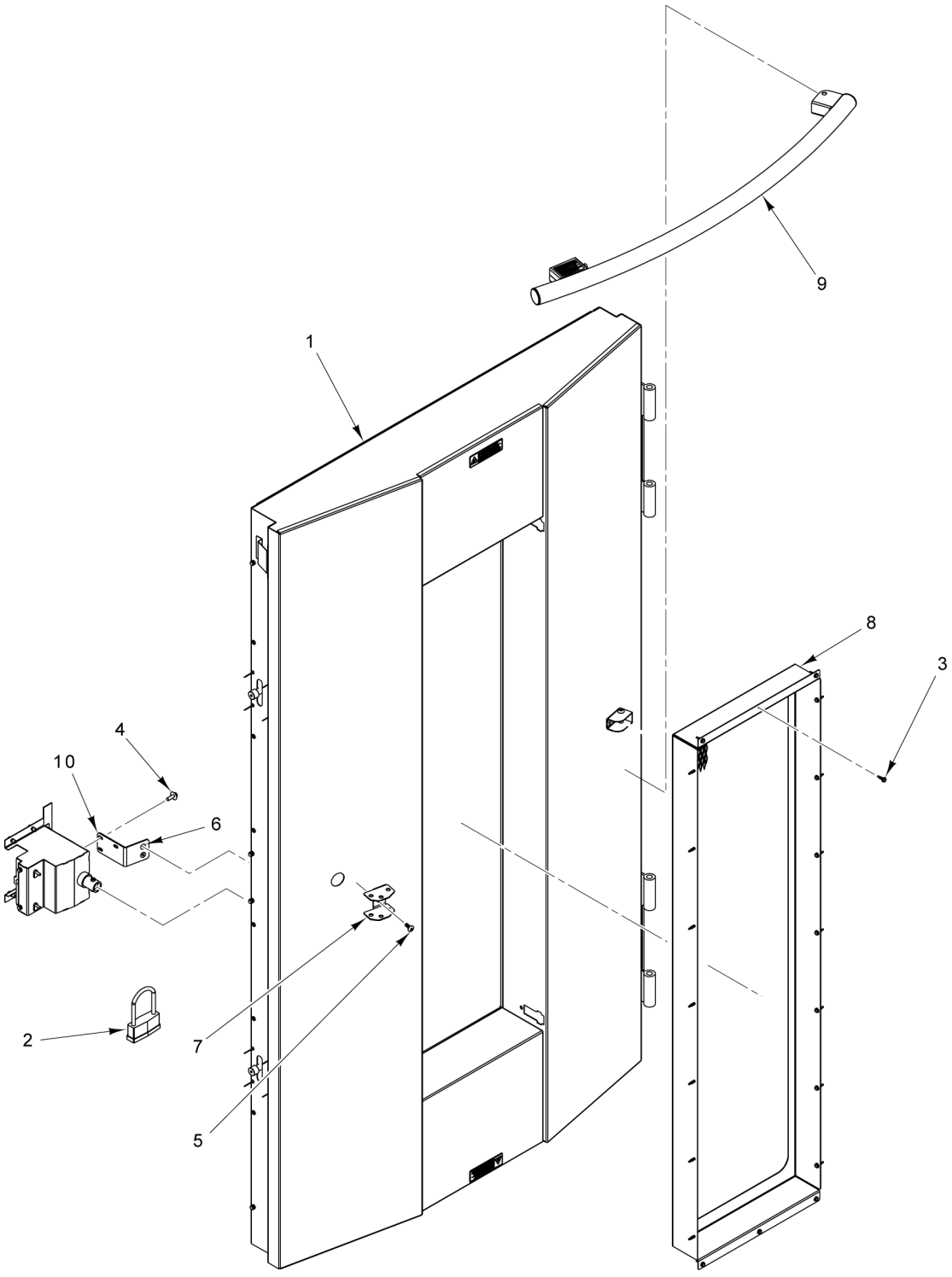

LOADING DOOR (SECURITY)

LOADING DOOR (SECURITY)

ILLUS. PL-61618	PART NO.	NAME OF PART	AMT.
1	01-1M6199-00006	Kit - Double Door (Security) (Incls Items 3 thru 10)	1
2	01-100V18-00081	Padlock (Long-Wide Shackle) (Incls. 2 Keys) NLA - 10/24/2023	1
3	01-1000V4-00426	Screw #10-16 x 3/4 Hex Hd. (Drill Tip) (SST)	20
4	01-1000V4-00283	Mach. Screw 1/4-20 x 3/4 Hex Washer Hd. (SST)	3
5	01-1000V4-00432	Mach. Screw 1/4-20 x 3/4 Phil. Pan Hd	2
6	01-1000V4-00122	Insert - Threaded 1/4-20	5
7	01-1M7456-00001	Bracket - Latch (Security)	1
8	01-1M7457-00002	Guard - Weldment (Security)	1
9	01-1M7477-00002	Handle - Loading Door (Security)	1
10	01-1M7478-00001	Backer Assy. - Door Latch (Security)	1

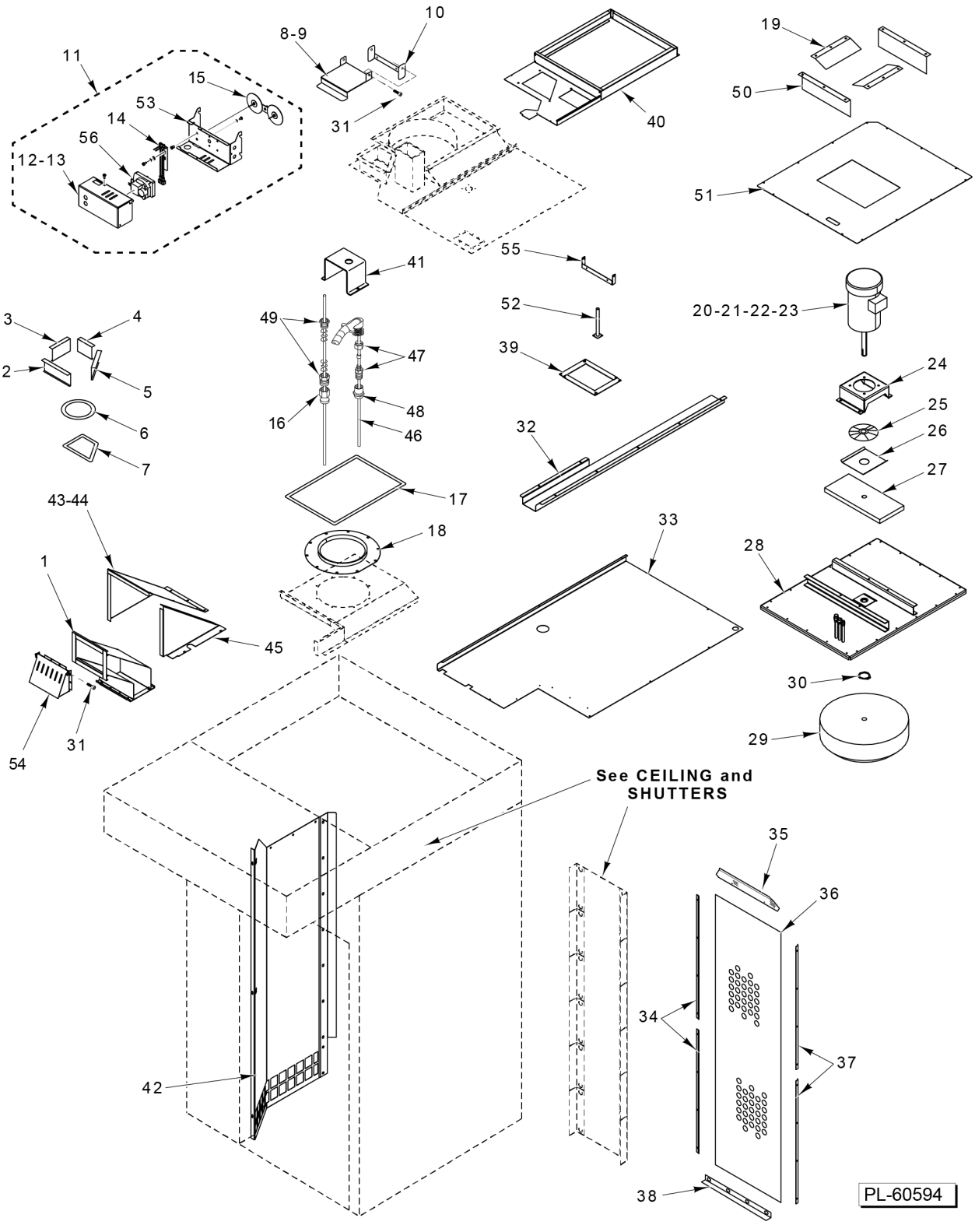

BLOWER, PANELS, AND VENTS (DOUBLE RACK)

BLOWER, PANELS, AND VENTS (DOUBLE RACK)

ILLUS. PL-60594	PART NO.	NAME OF PART	AMT.
1	01-1M7066-00002	Duct - Vent	1
2	01-1M5015-00001	Retainer - Exhaust Stack Packing, Front	1
3	01-1M5015-00004	Retainer - Exhaust Stack Packing	1
4	01-1M5015-00003	Retainer - Exhaust Stack Packing	1
5	01-1M5015-00002	Retainer - Exhaust Stack Packing	1
6	01-100V21-00072	Rope - Glass (3/4 Dia.) (Sold Per Inch)	AR
7	01-1M5982-00204	Collector (Top Gap Filler)	1
8	01-1M6550-00101	Bracket - Vent Lid	1
9	01-1M6549-00001	Vent - Intake Lid	1
10	01-100V16-00682	Gasket - Vent Duct	1
11	01-1M6551-00001	Vent - Motor Actuator - Assy. (Incls. Items 12 thru 15, 53, & 56)	1
12	01-1M6551-00102	Bracket - Vent Cover	1
13	01-1M7509-00001	Kit, Vent Motor Replacement	1
14	01-1M6552-00001	Vent Switch Assy	1
15	01-1M6553-00001	Cam - Vent Switch	1
16	01-100V17-00281	Coupler - Reducer 3/8 to 1/4	1
17	01-100V16-00682	Gasket - Vent Duct (Sold Per Inch)	AR
18	01-1M7056-00002	Bell - Inlet	1
19	01-1M1895-00001	Cover - Blower Insulation	2
20	01-1M7057-00002	Blower Assy. (3 Ph.) (Incls. Items 22 & 24 thru 30)	1
21	01-1M7057-00004	Blower Assy. (1 Ph.) (Incls. Items 23 & 24 thru 30)	1
22	01-1000V8-00052	Motor - Blower (3 Ph., 1-1/2 Hp.)	1
23	01-1000V8-00067	Motor - Blower (1 Ph., 2 Hp.)	1
24	01-1M1360-00001	Mount - Blower Motor	1
25	01-1M2458-00001	Heat Slinger Assy	1
26	01-1M1794-00001	Cover - Blower Insulation	1
27	01-1M1795-00001	Insulation - Blower	1
28	01-1M7058-00002	Weldment - Blower Mount	1
29	01-1000V8-00058	Wheel - Blower (18 In. Dia.)	1
30	01-1000V1-00028	Ring - Snap	1
31	01-1000V4-00572	Shoulder Screw, #10-32 X 3/8 Thread Length, .25 DIA X 3/8 Shoulder Length	4
32	01-1M7060-00202	Ceiling Skin - Channel Access	1
33	01-1M7060-00201	Ceiling Skin - Body (RH)	1
34	01-1M5686-00206	Retainer - Pressure Panel	2
35	01-1M5686-00207	Retainer - Pressure Panel Top	1
36	01-1M2572-00001	Screen - Pressure Panel	1
37	01-1M5686-00206	Retainer - Pressure Panel	2
38	01-1M5686-00205	Retainer - Pressure Panel	1
39	01-1M5868-00001	Power Vent - Filler Duct	1
40	01-1M7059-00002	Body - Insulation Blower Cover	1
41	01-1M1433-00001	Protector - Thermocouple	1
42	01-1M7051-00002	Panel - Suction	1
43	01-1M6814-00001	Duct Assy. (Incls. Items 44 & 45)	1
44	01-1M6814-00101	Duct - Top	1
45	01-1M6814-00102	Duct - Side	1
46	01-1A1828-00001	Kit - Thermocouple	1
47	01-100V17-00279	Fitting 1/4 x 3/16	1
48	01-100V17-00257	Coupling 1/4 NPT (Brass)	1
49	01-100V17-00304	Kit - Stuffing Box	1
50	01-1M2227-00001	Liner - Blower Insulation Cover	2
51	01-1M6955-00205	Cover - Blower Insulation	1
52	01-1M6774-00001	Tube - Weldment Highlimit	1
53	01-1M6551-00101	Bracket - Mounting (Vent)	1
54	01-1M5624-00001	Over Pressure Vent Assy	1
55	01-1M6550-00101	Bracket - Vent Lid	1
56	01-1000V8-00179	Motor - Vent Gear (4 RPM, 1/250 HP)	1

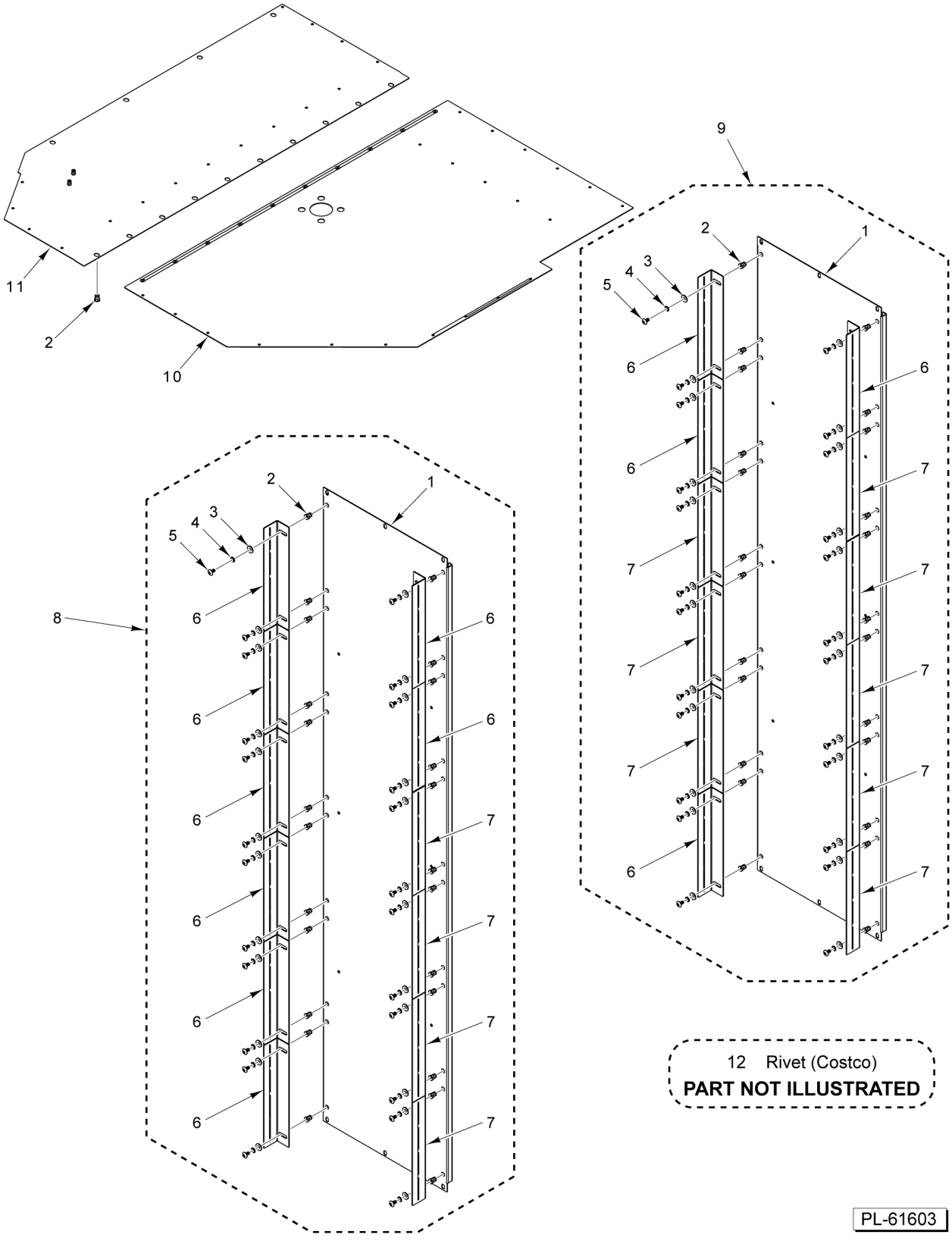

CEILING AND SHUTTERS

CEILING AND SHUTTERS

ILLUS. PL-61603	PART NO.	NAME OF PART	AMT.
1	01-1M2096-00002	Body - Pressure Panel Shutter Support	1
2	01-1000V4-00122	Insert - Threaded 1/4-20	AR
3	01-1000V4-00433	Washer 1/4 In. (SST)	AR
4	01-1000V4-00470	Lockwasher 1/4 In. (SST)	AR
5	01-1000V4-00503	Mach. Screw 1/4-20 x 1/2 In	AR
6	01-1M5459-00001	Shutter - Pressure Panel 90 Deg	AR
7	01-1M5459-00002	Shutter - Pressure Panel 97 Deg	AR
8	01-1M5177-00002	Pressure Panel Assy. (60 Hz)	1
9	01-1M5177-00004	Pressure Panel Assy. (50 Hz)	1
10	01-1M7049-00004	Ceiling Assy. - False (RH)	1
11	01-1M7049-00002	Ceiling Assy. - False (LH)	1
12	01-100V12-00008	Rivet (Costco)	AR

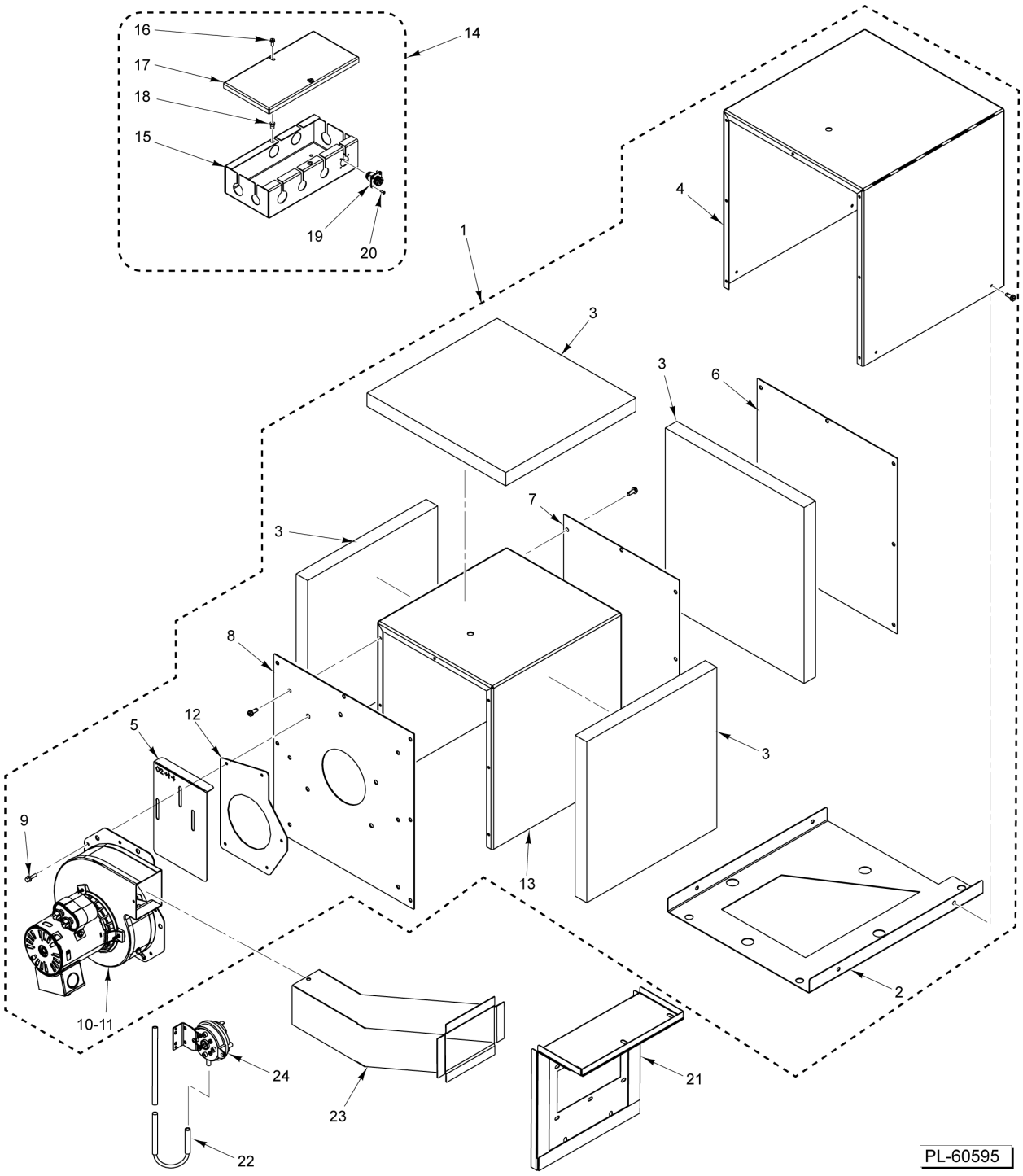

DRAFT INDUCER
(DOUBLE RACK)

DRAFT INDUCER
(DOUBLE RACK)

ILLUS. PL-60595	PART NO.	NAME OF PART	AMT.
1	01-1M6555-00002	Draft Inducer Assy. (Incls. Items 2 thru 13)	1
2	01-1M6555-00208	Bottom - Draft Inducer	1
3	01-1M6631-00002	Kit - Insulation	1
4	01-1M6555-00202	Insulation - Cover	1
5	01-1M6555-00108	Plate - Adjustment	1
6	01-1M6555-00204	Cover - Insulation (Rear)	1
7	01-1M6555-00203	Cover - Inner Rear	1
8	01-1M7355-00002	Plate - Draft Inducer Mounting (3-3/4 In. Hole)	1
9	01-1000V4-00284	Screw 10-32 x 3/4 Hex Washer Hd., Serrated Flange (SST)	8
10	01-1000V8-00156	Blower Motor - Draft Inducer	1
11	01-1M6661-00002	Harness, Conduit Assy. - Draft Inducer	1
*12	01-100V16-00956	Gasket - Insulation (Draft Inducer)	1
13	01-1M6555-00201	Inner - Draft Inducer	1
14	01-1M5525-00001	Box - Junction (Incls. Items 15 thru 20)	1
15	01-1M5525-00100	Box - Junction	1
16	01-1000V4-00474	Screw 10-32 x 1/2 Hex Washer Hd. (Zinc)	2
17	01-1M5525-00106	Cover - Junction Box	1
18	01-1000V4-00121	Insert - Threaded 10-32 Hex	1
19	01-1M7496-00001	Receptacle (Water Connection)	1
20	01-1000V4-00620	Mach. Screw 4-40 x 3/8	4
21	01-1M6764-00001	Connection - Hood	1
22	01-1M6597-00001	Tube - Pressure Switch	1
23	01-1M6763-00002	Duct	1
24	01-1000V6-00344	Switch - Pressure	1

* (Order with Item 10)

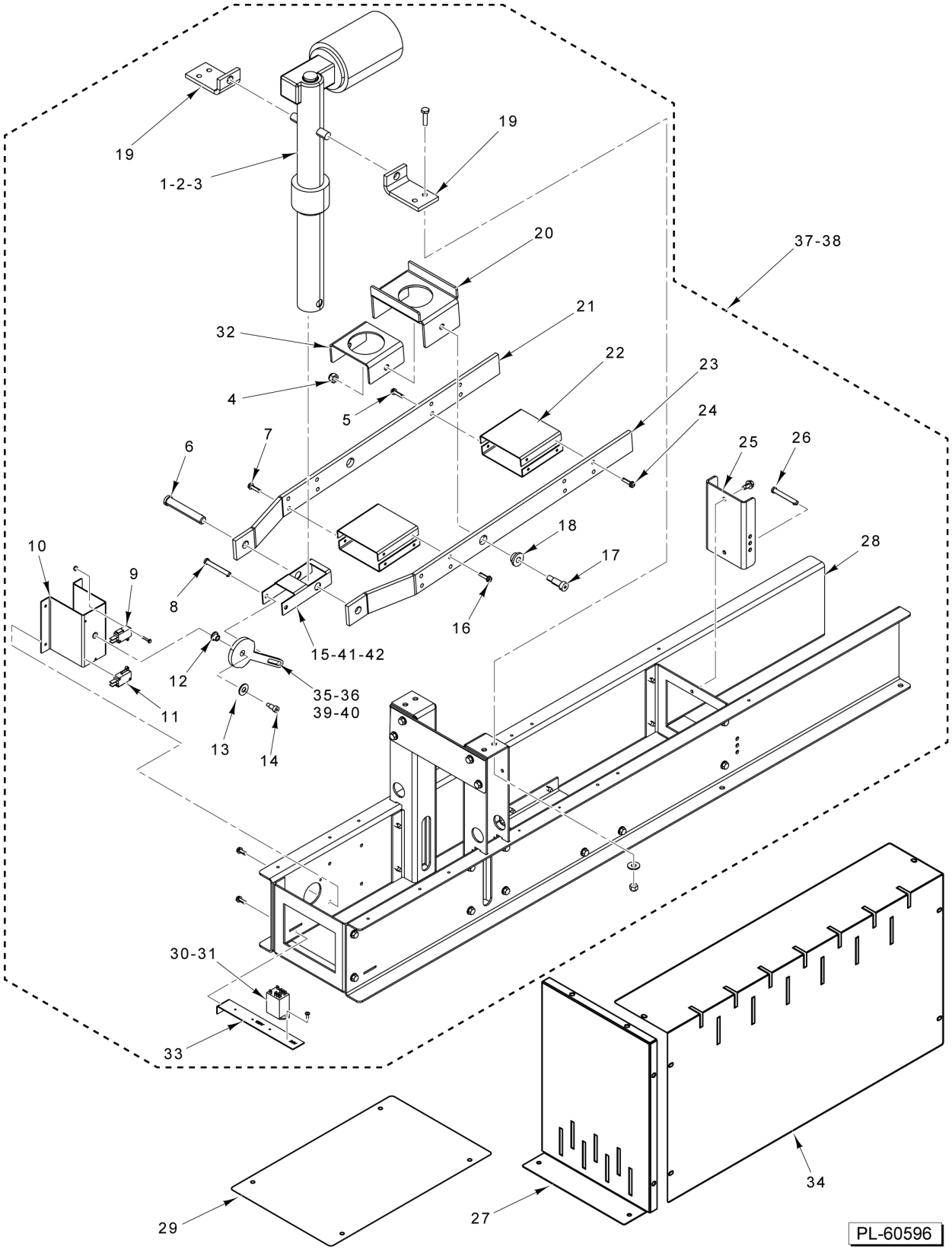
19
19
1-2-3
20
37-38
21
32
22
23
4
5
24
7
6
25
26
18
10
17
28
9
8
16
15-41-42
12
35-36
39-40
11
13
14
30-31
33
29
27
34
PL-60596

LIFTER

LIFTER

ILLUS. PL-60596	PART NO.	NAME OF PART	AMT.
1	01-1M6630-00201	Harness - Rack Lift	1
2	01-1M7545-00001	Kit - Rack Lift Actuator (ML-132521 to ML-132578) (Incls. Items 3, 6, 7, 35, 36, 41 & 42)	1
*3	01-1000V8-0158C	Capacitor - 30uF / 300Vac (Type 1 Heavy Duty)	1
4	01-1000V4-00380	Nut 5/16-18 NYLOCK	2
5		Screw 10-32	4
6	01-1000V1-00109	Pin - Clevis (1/2 x 2-3/4 In.)	1
7		Screw 10-32	4
8	01-1000V1-00087	Pin - Clevis (1/4 x 2 In.)	1
9	01-1000V6-00343	Switch - Lever SPST	1
10	01-1M6603-00001	Bracket Assy. - Switch	1
11	01-1000V6-00343	Switch - Lever SPST	1
12	01-1000V0-00139	Bearing - Flanged Sleeve	1
13	01-1000V4-00433	Washer 1/4 In. (SST)	1
14	01-1000V4-00572	Shoulder Screw, #10-32 X 3/8 Thread Length, .25 DIA X 3/8 Shoulder Length	1
15	01-1M6600-00204	Arm - Lift Switch Actuating (Before 3/1/23)	1
16		Screw 10-32	4
17	01-1000V4-00379	Bolt - Shoulder	2
18	01-1000V0-00121	Bearing	2
19	01-1M6600-00202	Bracket - Mounting (Linear Actuator)	2
20	01-1M6601-00103	Support - Rotator	1
21	01-1M6601-00101	Arm - Lifting	1
22	01-1M6601-00102	Brace - Lifting Arm	4
23	01-1M6601-00101	Arm - Lifting	1
24		Screw 10-32	4
25	01-1M6600-00203	Bracket - Support	1
26	01-1000V1-00087	Pin - Clevis (1/4 x 2 In.)	2
27	01-1M6608-00001	Cover - Front/Back	2
28	01-1M6599-00002	Lifter Body Assy	1
29	01-1M6608-00004	Cover - Front	1
30	01-1000V6-00271	Relay - D.P.D.T. (1/2 Hp., 120 VAC)	1
31	01-1000V6-00297	Relay - DPDT 1/2 HP. (24V Coil)	1
32	01-1M6601-00104	Support - Rotator	1
33	01-1M6600-00104	Bracket - Relay	1
34	01-1M6608-00002	Cover - Side	2
35	01-1M6600-00205	Cam - Lift Switch (Before 3/1/23)	1
36	01-1M6600-00605	Cam - Lift Switch (A Style Carrier) (V-Notch Up) (Before 3/1/23)	1
37	01-1M7551-00002	Rack Lift Assy. (B or C Type Lifter)	1
38	01-1M7551-00006	Rack Lift Assy. (A Type Lifter)	1
39	01-1M7551-00102	Cam - Lift Switch (Starting 3/1/23 or with 01-1M7551-00103 Actuator)	1
40	01-1M7551-00104	Cam - Lift Switch (A Type Lifter) (Starting 3/1/23 or with 01-1M7551-00103 Actuator)	1
41	01-1M7551-00101	Bracket - Lift Actuator (Starting 3/1/23 or with 01-1M7551-00103 Actuator)	1
**42	01-1M7551-00103	Actuator	1

* For Use With 01-1000V8-00158 Actuator Only
** Used on ovens with 01-1M7545-00001 upgrade kit.

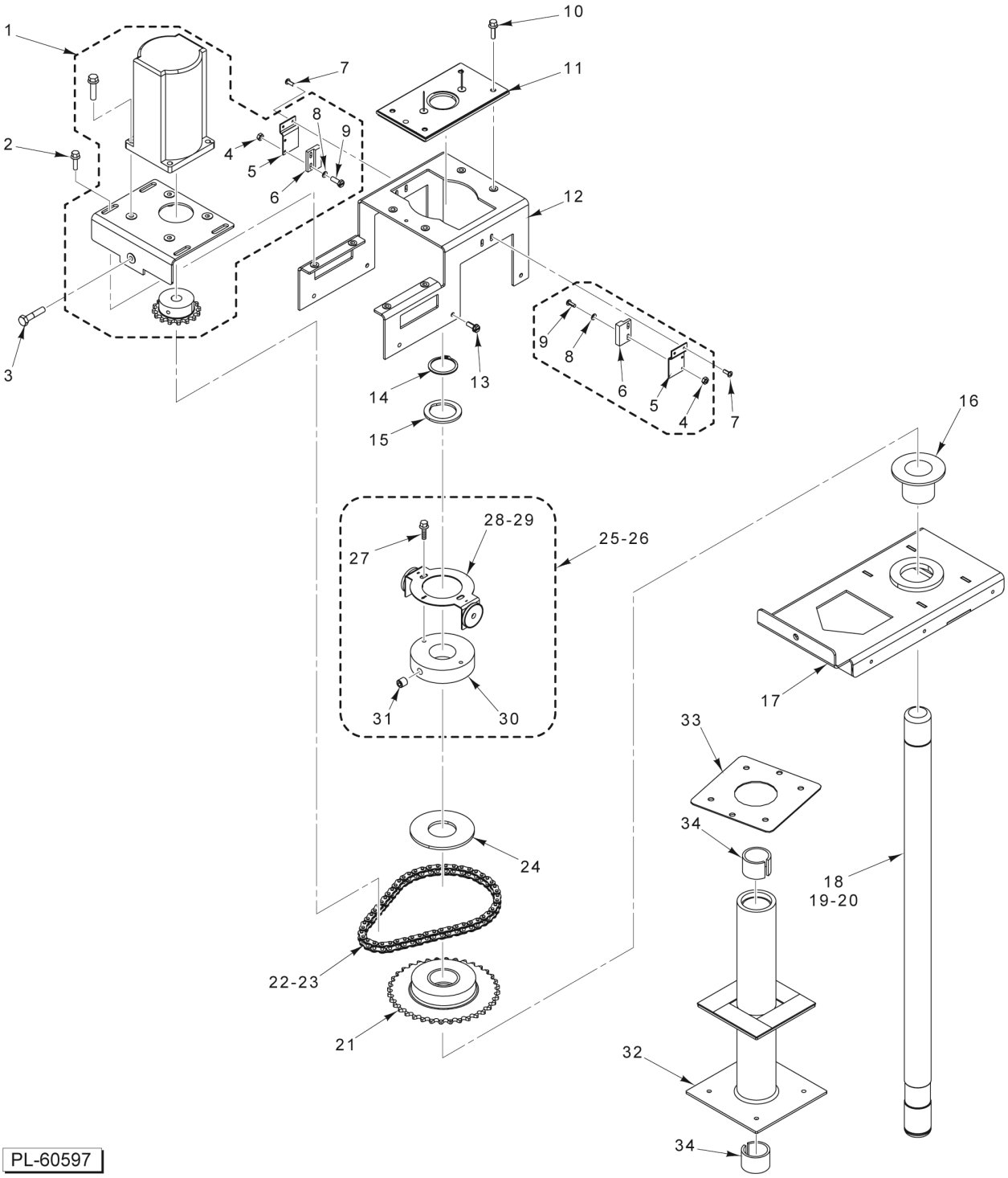
1
2
3
4
5
6
7
8
9
10
11
12
13
14
15
16
17
18
19-20
21
22-23
24
25-26
27
28-29
30
31
32
33
34
PL-60597

ROTATOR

ROTATOR

ILLUS. PL-60597	PART NO.	NAME OF PART	AMT.
1	01-1M7318-00001	Rotation Motor Assy. (Incls. Items 4 thru 6, 8, & 9)	1
2	01-1000V4-00284	Screw 10-32 x 3/4 Hex Washer Hd., Serrated Flange (SST)	4
3	01-1000V4-00564	Screw, Sheet Metal Hex Hd. W/ Washer 1/4-20 x 1 (SST)	1
4	01-1000V4-00586	Nut	4
5	01-1M6604-00106	Bracket - Rotate Switch	2
6	01-1M5777-00101	Switch (Magnetic)	2
7	01-1000V4-00515	Screw - Sheet Metal, Pan Hd. 6-32 x 3/8 (Zinc)	AR
8	01-1000V4-00585	Flat Washer	4
9	01-1000V4-00584	Screw	4
10	01-1000V4-00284	Screw 10-32 x 3/4 Hex Washer Hd., Serrated Flange (SST)	4
11	01-1M6606-00002	Shaft Alignment Assy	1
12	01-1M6604-00201	Bracket - Mounting	1
13	01-1000V4-00385	Screw - Sheet Metal, Hex Hd. 10-16 x 3/4 (SST)	4
14	01-1000V1-00085	Snap Ring	1
15	01-1M6704-00001	Shim - Carrier (Height Adjustment)	1
16	01-1000V0-00114	Bearing - Flange	1
17	01-1M6605-00001	Rotator - Lifter	1
18	01-1M6604-00105	Shaft - Rotator (B Style)	1
19	01-1M6773-00101	Shaft - Rotator (A Style)	1
20	01-1M6604-00305	Shaft - Rotator (C Style)	1
21	01-1M6610-00001	Sprocket - Rotator	1
22	01-1000V3-0087A	Chain - Roller 20-1/8 In	1
23	01-1000V3-00088	Link - Connecting	AR
24	01-1M6604-00104	Clutch - Slide	1
25	01-1M6629-00003	Magnet Switch Assy. (One Magnet) (A Style Double Rack) (C Style Single Rack) (Incls. Items 27 thru 31)	1
26	01-1M6629-00004	Magnet Switch Assy. (Two Magnets) (B Style) (C Style Single Rack) (Incls. Items 27 thru 31)	1
27	01-1000V4-00284	Screw 10-32 x 3/4 Hex Washer Hd., Serrated Flange (SST)	2
28	01-1M6880-00003	Pointer Assy. (One Magnet) (A Style Double Rack) (C Style Single Rack)	1
29	01-1M6880-00004	Pointer Assy. (Two Magnets) (B Style) (C Style Double Rack)	1
30	01-1M6604-00103	Collar, Set - Rotator	1
31	01-1000V4-00161	Screw, Set - Allen (3/8-16)	1
32	01-1M6662-00001	Housing - Shaft (Incls. Bearing)	1
33	01-1M6715-00001	Clamp - Rotator Housing	1
34	01-1M7464-00001	Kit - Bearing (Shaft Housing)	2

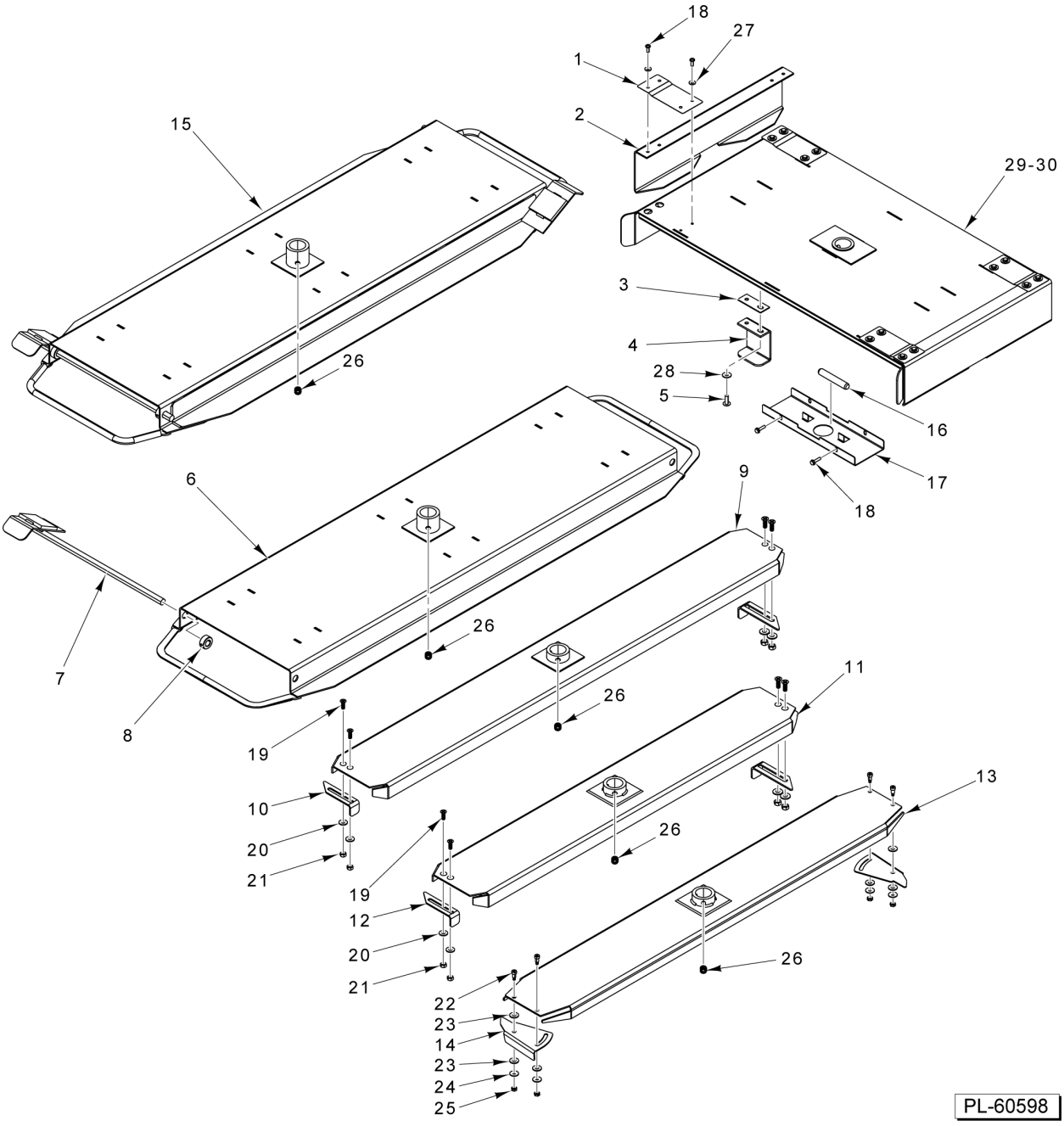
18
27
1
2
15
29-30
3
4
28
5
26
16
17
18
6
9
7
26
8
26
11
19
10
20
21
13
26
19
12
20
21
26
22
23
14
23
24
25
PL-60598

CARRIER

CARRIER

ILLUS. PL-60598	PART NO.	NAME OF PART	AMT.
1	01-1M5367-00001	Strap - Side Support	4
2	01-1M5368-00001	Channel - Side Hanger	2
3	01-1M5369-00002	Shim - Support	4
4	01-1M5366-00001	Channel - Support Hanger	2
5	01-1000V4-00534	Bolt 1/4-20 x 3/4 In.	4
6	01-1M6622-00002	Carrier (B Style) (Double Rack) (Incls. Items 7, 8, & 26) (15.60 In. Wide)	1
7	01-1M2580-00002	Stop - Rack Carrier (B Style Carrier)	2
8	01-1000V1-00013	Collar - Set 1/2 In. Dia.	4
9	01-1M6770-00003	Carrier (C Style) (42-1/2 In. Stops) (Incls. Items 10, 19 thru 21, & 26)	1
10	01-1M4862-00101	Latch - Carrier	2
11	01-1M6770-00004	Carrier (C Style) (33 In. Stops) (Incls. Items 12, 19 thru 21, & 26)	1
12	01-1M4862-00101	Latch - Carrier	2
13	01-1M6770-00007	Carrier (C Style) (Panera) (Incls. Item 14, & 22 thru 26)	1
14	01-1M4862-00701	Lock - Carrier (Double Models Only) (Panera Bread Only)	2
15	01-1M6622-00004	Carrier (B Style W/Welded Extensions) (16.875 In. Wide) (Incls. Item 7 thru 8, & 26)	1
16	01-1M6942-00001	Pin - Locking (A Style Lift 1.25 " Shaft)	1
17	01-1M6772-00101	Plate - Cover, Pin	1
18	01-1000V4-00284	Screw 10-32 x 3/4 Hex Washer Hd., Serrated Flange (SST)	AR
19	01-1000V4-00074	Mach. Screw 1/4-20 x 3/4 Phil. Flat Hd	4
20	01-1000V4-00433	Washer 1/4 In. (SST)	4
21	01-1000V4-00599	Nut 1/4 In. (SST) (Toplock - Vibration Resistant)	4
22	01-1000V4-00281	Screw, Shoulder #10-32, 1/4 x 3/8 In. (SST)	4
23	01-1000V4-00433	Washer 1/4 In. (SST)	4
24	01-1000V4-00434	Washer - Flat #10 (SST)	4
25	01-1000V4-00336	Nut #10-32 W/ Lockwasher (SST)	4
26	01-1000V4-00654	Screw - Set 3/8-24 x 3/8 (Knurled Tip) (Knurled Tip)	2
27	01-1000V4-00434	Washer - Flat #10 (SST)	AR
28	01-1000V4-00433	Washer 1/4 In. (SST)	4
29	01-1M6772-00001	Carrier (A Style) (Double Rack) (Incls. Items 1 thru 5, 16 thru 18, 27, 28, & 30)	1
30	01-1000V4-00121	Insert - Threaded 10-32 Hex	16

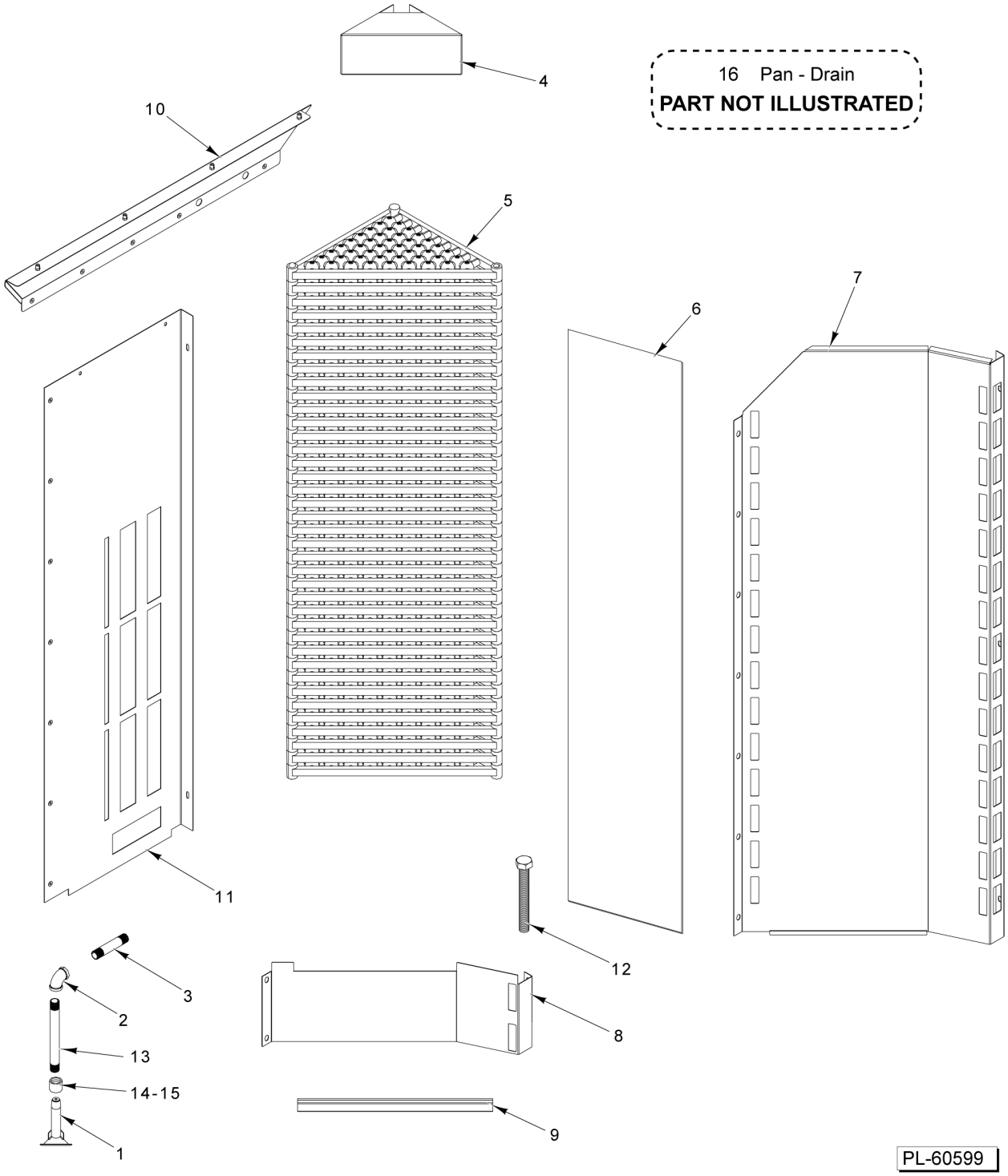

STEAMER ASSEMBLY
(DOUBLE RACK)

STEAMER ASSEMBLY
(DOUBLE RACK)

ILLUS. PL-60599	PART NO.	NAME OF PART	AMT.
1	01-1M7100-00001	Sprayer - Steam Manifold	1
2	01-100V17-00347	Elbow 1/2 In. x 90 Deg. (SST)	1
3	01-100V17-00534	Pipe 1/2 x 3-1/2 (SST)	1
4	01-1M7065-00001	Angle, Steamer Box	1
5	01-100V16-00529	Casting - Steamer	28
6	01-1M6325-00002	Sheet - Splash	1
7	01-1M7050-00201	Panel - Steamer Outer	1
8	01-1M7050-00202	Panel - Steamer Bottom	1
9	01-1M5065-00001	Bracket - Water Guide	7
10	01-1M7052-00002	Panel - Suction Top	1
11	01-1M7053-00002	Panel - Steamer (Rear)	1
12	01-1M2161-00001	Screw - Leveler	1
*13	01-100v17-00515	Pipe 1/2 x 13 In. (SST)	1
14	01-100V17-00183	Coupler 1/2 In. (SST)	1
15	01-100V17-00850	Pipe - 1/2 x 15 In. (Starting 5/19/23)	1
16	01-1M7106-00001	Pan - Drain	1

* On ovens produced before 05/19/23, measure existing pipe prior to ordering. If existing pipe does not place the head of the Manifold inside of the Steamer Box, order item #15.

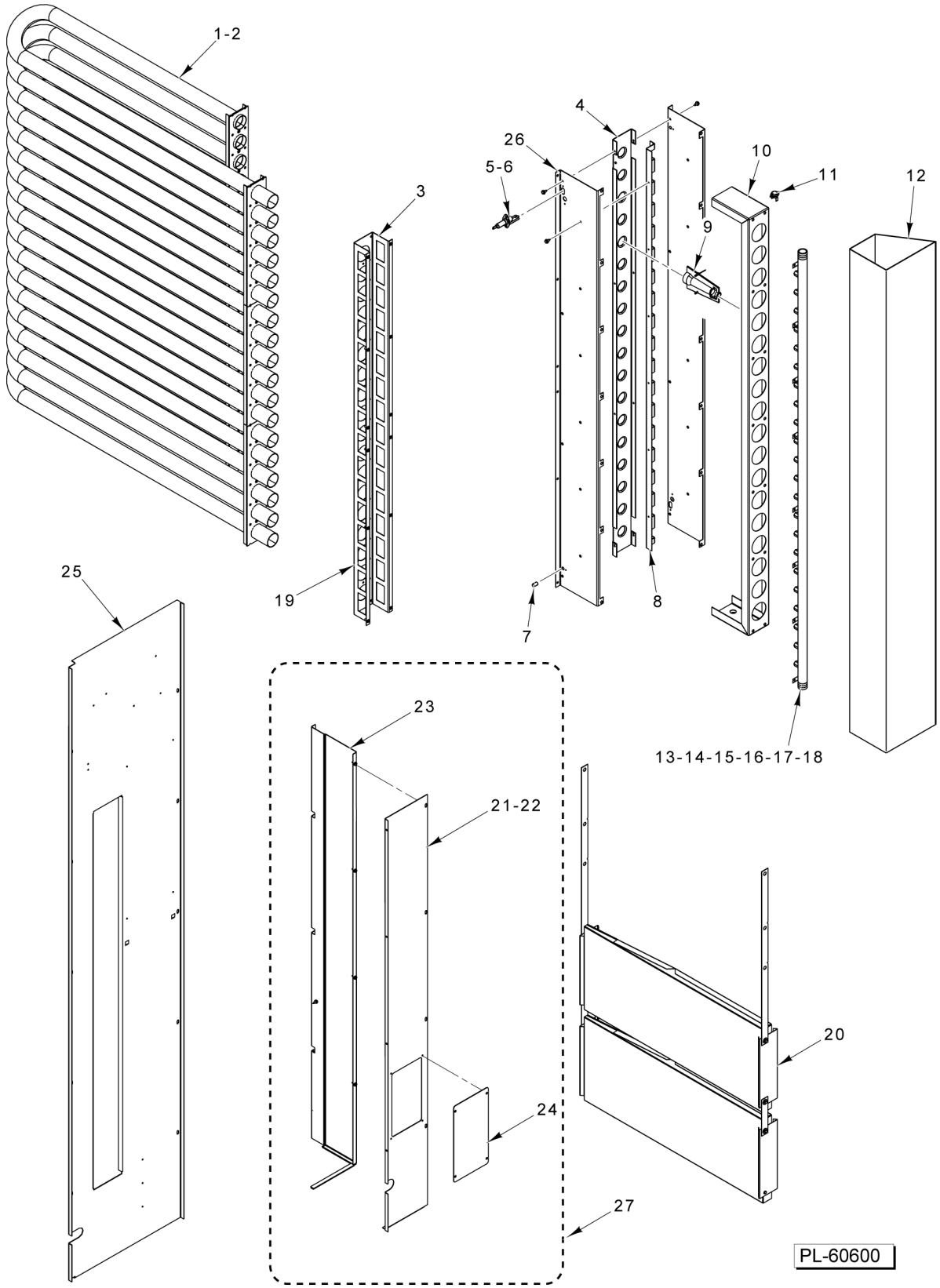

GAS BURNER AND HEAT CIRCULATION (DOUBLE RACK)

GAS BURNER AND HEAT CIRCULATION (DOUBLE RACK)

ILLUS. PL-60600	PART NO.	NAME OF PART	AMT.
1	01-1M7109-00002	Tube Assy. (6-Dimpled Tube)	3
2	01-100V16-00530	Gasket - Heat Exchanger (6-Hole)	6
3	01-1M6080-00001	Channel - Hat Burner Rack Assy.	1
4	01-1M5467-00001	Plate - Firing (Burner Rack)	2
5	01-1000V9-00201	Ignitor - Burner Spark	1
6	01-100V10-00323	Cabel Suppression (Spark Igniter 18 In.)	1
7	01-1000V9-00169	Rod - Flame Sensor	1
8	01-1M5465-00001	Mount - Burner	2
9	01-1000V9-00146	Burner - In-Shot (Crossover)	18
10	01-1M5401-00002	Enclosure - Burner Rack	1
11	01-1M6717-00001	Switch - Flame Rollout	1
12	01-1M7055-00002	Collector - Weldment	1
13	01-100V16-01030	Manifold Assy. - Gas Supply (NAT)	1
14	01-100V16-01031	Manifold Assy. - Gas Supply (LP)	1
15	01-1000V9-00171	Orifice #49 (0.073 In.) (NAT)	18
16	01-1000V9-00173	Orifice #56 (0.046 In.) (PRO)	18
17	01-1000V9-00185	Orifice (0.0635 In.) (NAT) (Above 6500 Ft.)	18
18	01-1000V9-00186	Orifice (0.040 In.) (PRO) (Above 6500 Ft.)	18
19	01-1M5463-00001	Box - Burner Assy. (Incls. Items 4, 8, 9, & 26)	1
20	01-1M6591-00002	Baffle - Center Assy.	1
21	01-1M7064-00002	Burner Assy. - Cover (Incls. Items 22, 23, & 24)	1
22	01-1M7064-00201	Burner - Cover Front	1
23	01-1M7064-00202	Burner - Side Cover	1
24	01-1M6079-00203	Plate Cover - Burner Access	1
25	01-1M7048-00201	Cabinet - Skin Control	1
26	01-1M5464-00001	Plate - Side (Burner Rack)	2
27	01-1M6079-00002	Kit - Burner Cover (Clean Air) (Incls. Items 21 thru 24)	1

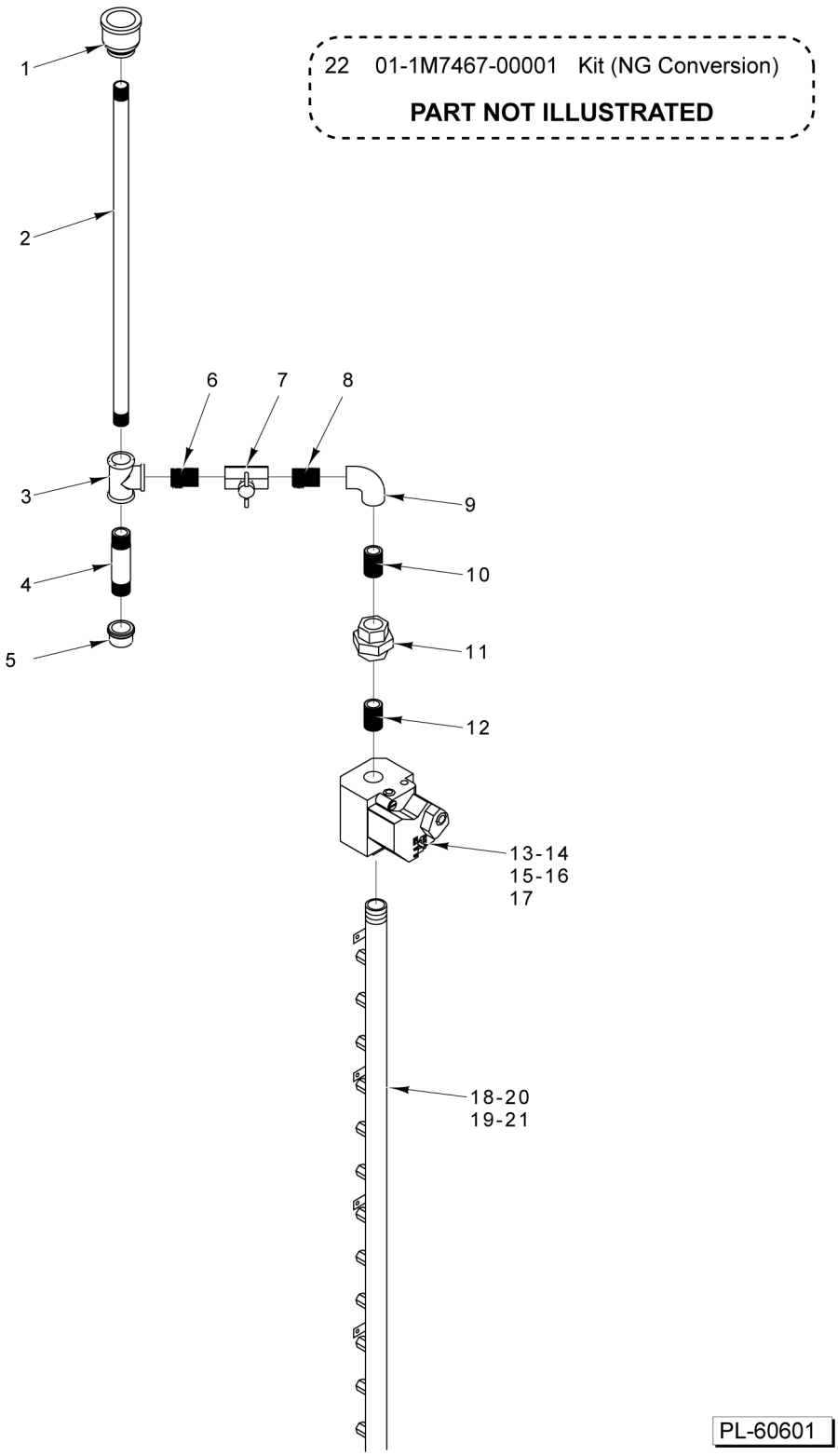

GAS SUPPLY PLUMBING

GAS SUPPLY PLUMBING

ILLUS. PL-60601	PART NO.	NAME OF PART	AMT.
1	01-100V17-00577	Bell - Reducer	1
2	01-100V17-00576	Pipe (3/4 In. x 23 In.)	1
3	01-100V17-00451	Tee 3/4 NPT x 3/4 NPT	1
4	01-100V17-00575	Pipe (3/4 In. x 4 In.)	1
5	01-100V17-00472	Cap - Pipe 3/4	1
6	FP-036-92	Pipe 3/4 x 1-3/8 TBE (Black)	1
7	01-100V17-00169	Valve - Shut Off, Gas 3/4 NPT	1
8	FP-036-92	Pipe 3/4 x 1-3/8 TBE (Black)	1
9	01-100V17-00513	Elbow - Pipe 90 Deg. x 3/4 NPT (Black)	1
10	FP-036-92	Pipe 3/4 x 1-3/8 TBE (Black)	1
11	01-100V17-00470	Union 3/4 NPT BLK #150	1
12	FP-036-92	Pipe 3/4 x 1-3/8 TBE (Black)	1
*13	01-1000V9-00181	Valve - Gas (3/4 In.)	1
**14	00-913102-00169	Kit - Gas Valve & Reducing Bushings (3/4 In.)	1
*15	01-1000V9-00127	Valve Kit - LP Conversion	1
**16	01-1000V9-00128	Valve Kit - LP Conversion	1
17	01-1M5898-00001	Gas Line Assy. (NAT) (Incls. Items 1 thru 12, & 14)	1
18	01-100V16-01030	Manifold Assy. - Gas Supply (NAT)	1
19	01-100V16-01031	Manifold Assy. - Gas Supply (LP)	1
20	01-1M7096-00002	Gas Line Manifold Assy. (NAT) (Incls. Items 1 thru 12, 14, & 18)	1
21	01-1M7096-00004	Gas Line Manifold Assy. (LP) (Incls. Items 1 thru 12, 14, 16, & 19)	1
22	01-1M7467-00001	Valve Kit - NAT Conversion (Use with 01-1000V6-00211)	1

* Units Constructed Before 08/01/2017
** Units Constructed 08/01/2017 & After

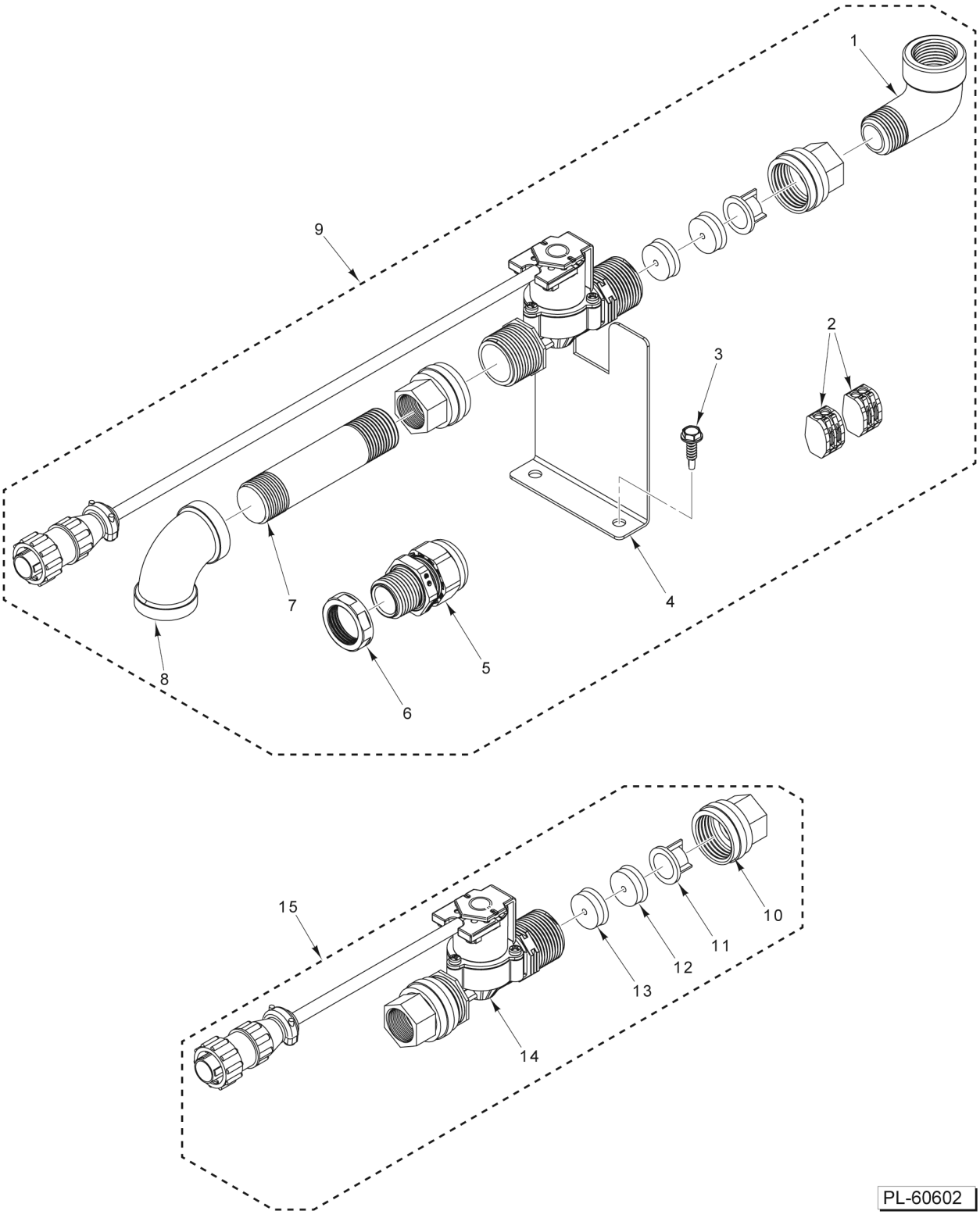

EXTERIOR WATER SUPPLY

EXTERIOR WATER SUPPLY

ILLUS. PL-60602	PART NO.	NAME OF PART	AMT.
1	01-100V17-00538	Elbow 1/2 Street (SST)	1
2	01-1000V5-00362	Block - Terminal (2 Teminals) (W/ Operating Levers)	2
3	01-1000V4-00426	Screw #10-16 x 3/4 Hex Hd. (Drill Tip) (SST)	2
4	01-1M7495-00101	Bracket - Support	1
5	01-100V11-00248	Strain Relief	1
6	01-100V11-00249	Nut - Strain Relief	1
7	01-100V17-00736	Pipe 3-1/2 x 1/2 In	1
8	01-100V17-00347	Elbow 1/2 In. x 90 Deg. (SST)	1
9	01-1M7495-00001	Kit - Steam Solenoid (Incls. Items 1 thru 8, & 15)	AR
10	01-100V17-00830	Adapter - Hose to Pipe 3/4 GHTF x 1/2 NPTF	1
*11	01-100V17-00838	Filter - Solenoid Valve (5 GPM Without Restrictor)	1
12	01-100V17-00840	Restrictor - Flow (White 3 GPM) (Double Rack Oven)	1
13	01-100V17-00839	Restrictor - Flow (Brown 2 GPM) (Single Rack Oven)	1
14	01-1M7493-00001	Solenoid Assy	1
15	01-1M7494-00001	Kit - Water Solenoid (Incls. Items 10 thru 14)	AR

* No Restrictor Used on Panera Bread Double Rack Ovens.