CATALOG OF REPLACEMENT PARTS



OV520E ELECTRIC RACK OVENS

ML-132579	**OV520E1**
ML-132578	**OV520E2**

A product of BAXTER MFG. CO., INC. 19220 STATE ROUTE 162 EAST, ORTING, WA 98360

FORM 43394 Rev. C (January 2026)

 © BAXTER MFG. 2026

Table of Contents

5 COMPONENT BOX
7 CONTROL CABINET, DOOR, AND CONTROLLER
9 CABINET (SINGLE RACK) (ML-132579)
11 CABINET (DOUBLE RACK) (ML-132578)
13 HOOD (SINGLE RACK) (ML-132579)
15 HOOD (DOUBLE RACK) (ML-132578)
17 LOADING DOOR (SINGLE RACK) (ML-132579)
19 LOADING DOOR (DOUBLE RACK) (ML-132578)
21 BLOWER, PANELS, AND VENTS (SINLGE RACK) (ML-132579)
23 BLOWER, PANELS, AND VENTS (DOUBLE RACK) (ML-132578)
27 LIFTER
29 ROTATOR
31 CARRIER
33 STEAMER ASSEMBLY (SINGLE RACK) (ML-132579)
35 STEAMER ASSEMBLY (DOUBLE RACK) (ML-132578)
37 EXTERIOR WATER SUPPLY
39 HEATING ELEMENTS

49 Fuse - Fast Acting (10 Amp., 250 V.)
50 Fuse - Fast Acting (200 mA., 250 V.)

PARTS NOT ILLUSTRATED

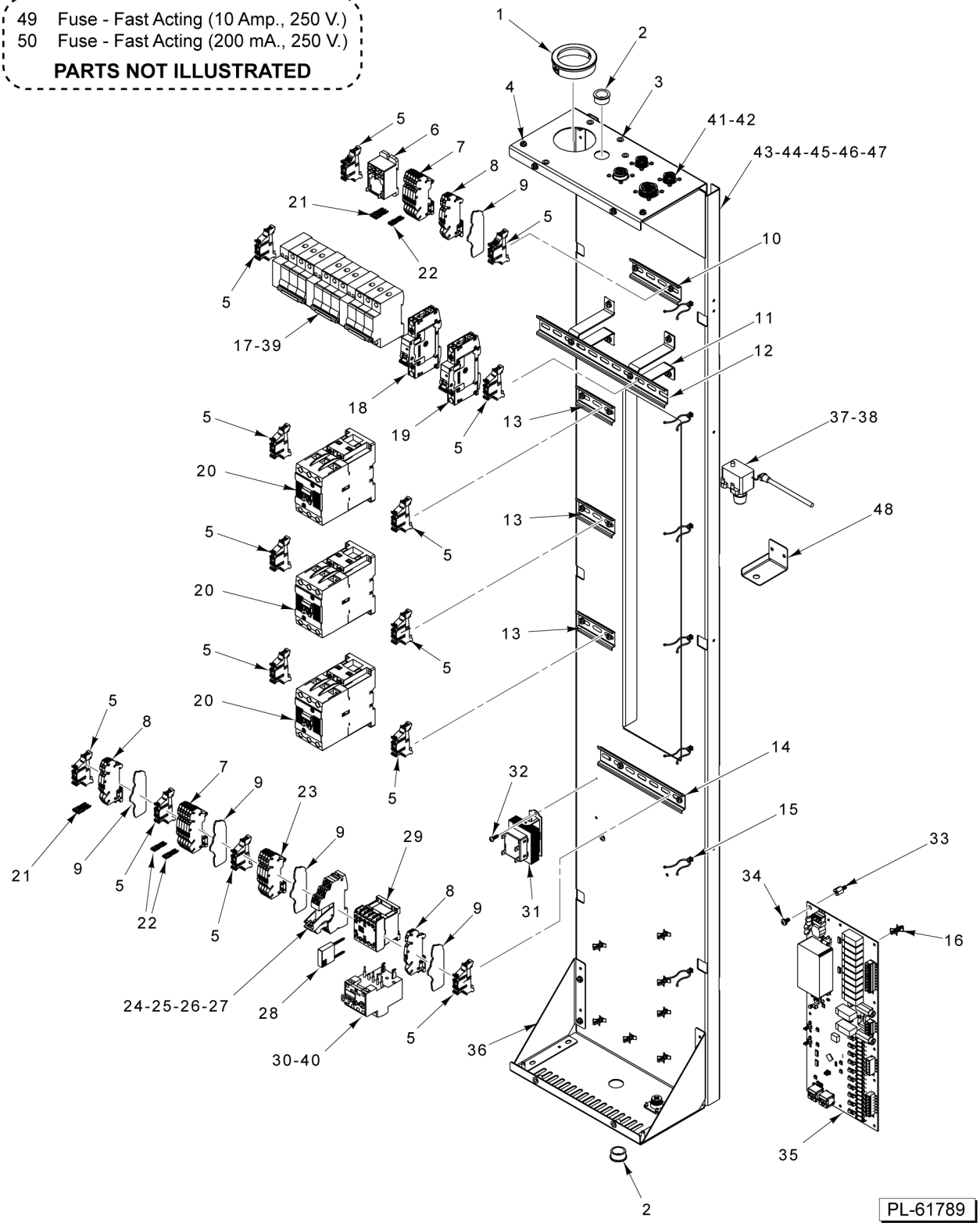

COMPONENT BOX

COMPONENT BOX

ILLUS. PL-61789	PART NO.	NAME OF PART	AMT.
1	01-1000V5-00033	Bushing - Snap (2 In.)	1
2	01-1000V5-00059	Bushing - Snap 7/8 In. (Plastic)	2
3	01-1000V4-00121	Insert - Threaded 10-32 Hex	AR
4	01-1000V4-00474	Screw 10-32 x 1/2 Hex Washer Hd. (Zinc)	AR
5	01-1000V5-00396	Stop - End (Din Rail) (35mm)	AR
6	01-1000V6-00389	Relay, DPST - 1 Hp @ 120V	1
7	01-1000V5-00397	Block - Spring Terminal (4 Wire Gray)	AR
8	01-1000V5-00399	Block - Spring Terminal (4 Wire Green/Yellow)	5
9	01-1000V5-00400	Block - Spring Terminal (End Cap) (4 Wire)	5
10	01-100V18-00115	Din Rail (9080-M H) (10 In.)	1
11	01-100V18-0214A	Bracket - Din Rail	2
12	01-100V18-00115	Din Rail (9080-M H) (10 In.)	1
13	01-100V18-00115	Din Rail (9080-M H) (10 In.)	3
14	01-100V18-00115	Din Rail (9080-M H) (10 In.)	1
15	01-1000V5-00359	Standoff .700 x 1.64 In. (Twist Lok) Wire Tires (.19 hole)	7
16	01-1000V5-00405	Post - Mounting (PCB Support) (0.156 Holes x 0.375 Standoff)	9
17	01-1M7546-00001	Kit - Breaker Replacement (63 Amp.) (208-240 V.) (With 120 V. UV Breaker) (Single Rack)	2
17	01-1M7546-00001	Kit - Breaker Replacement (63 Amp.) (208-240 V.) (With 120 V. UV Breaker) (Double Rack)	3
18	01-1000V6-00423	Circuit Breaker (10A)	1
19	01-1000V6-00424	Circuit Breaker (13A)	1
20	01-1000V6-00348	Contactor (3-Pole) (50 Amp.) (Single Rack)	2
20	01-1000V6-00348	Contactor (3-Pole) (50 Amp.) (Double Rack)	3
21	01-1000V5-00401	Jumper (3-Pole)	2
22	01-1000V5-00411	Jumper (2-Pole)	3
23	01-1000V5-00398	Block - Spring Terminal (4 Wire Blue)	4
24	01-1000V6-00416	Base - Relay (250V)	1
25	01-1000V6-00417	Relay (24 VAC) (8A)	1
26	01-1000V6-00418	Relay (12-24 V)	1
27	01-1000V6-00419	Lever - Relay	1
28	01-1000V6-00402	Contactor	1
29	01-1000V6-00398	Contactor (208-240/480 V., 3 Ph.) (9 Amp.)	1
30	01-1000V6-00399	Contactor - Overload (208-240 V., 3 Ph.) (6.3 Amp.)	1
31	01-1000V6-00366	Contactor	1
32	01-1000V4-00442	Screw Pan Hd. 8-32 x 1/2 (Zinc)	2
33	01-1000V4-00659	Standoff	1
34	01-1000V4-00662	Mach. Screw 10-32 x 3/8 Phil Hd	1
35	01-100V16-01085	Board - I/O	1
36	01-1M7516-00209	Bracket - Component Box	4
37	01-1000V6-00406	Thermostat - Hi Limit	1
38	01-1000V6-00407	High Limit Cap	1
39	01-1M7547-00001	Kit - Breaker Replacement (32/35 Amp.) (380-415/440-480 V.) (With 120 V. UV Breaker) (Single Rack)	2
39	01-1M7547-00001	Kit - Breaker Replacement (32/35 Amp.) (380-415/440-480 V.) (With 120 V. UV Breaker) (Double Rack)	3
40	01-1000V6-00408	Contactor - Overload (440-480 V., 3 Ph.) (2.8 Amp.)	1
41	01-1000V4-00620	Mach. Screw 4-40 x 3/8	AR
42	01-1000V4-00621	Washer - Lock	AR
43	01-1M7516-00020	Body - Component Box (Incls. Items 3, 4, & 36)	1
44	01-1M7516-00001	Component Box Assy. (208-240 V.) (Single Rack) (Incls. Items 1 thru 38)	1
45	01-1M7516-00002	Component Box Assy. (208-240V) (Double Rack) (Incls. Items 1 thru 38)	1
46	01-1M7516-00003	Component Box Assy. (440-480 V.) (Single Rack) (Incls. Items 1 thru 16, 18 thru 29, & 31 thru 40)	1
47	01-1M7516-00004	Component Box Assy. (440-480 V) (Double Rack) (Incls. Items 1 thru 16, 18 thru 29, & 31 thru 40)	1
48	01-1M7527-00201	Bracket - Mounting	1
49	01-100V10-00372	Fuse - Fast Acting (10 Amp., 250 V.)	1
50	01-100V10-00373	Fuse - Fast Acting (200 mA., 250 V.)	1

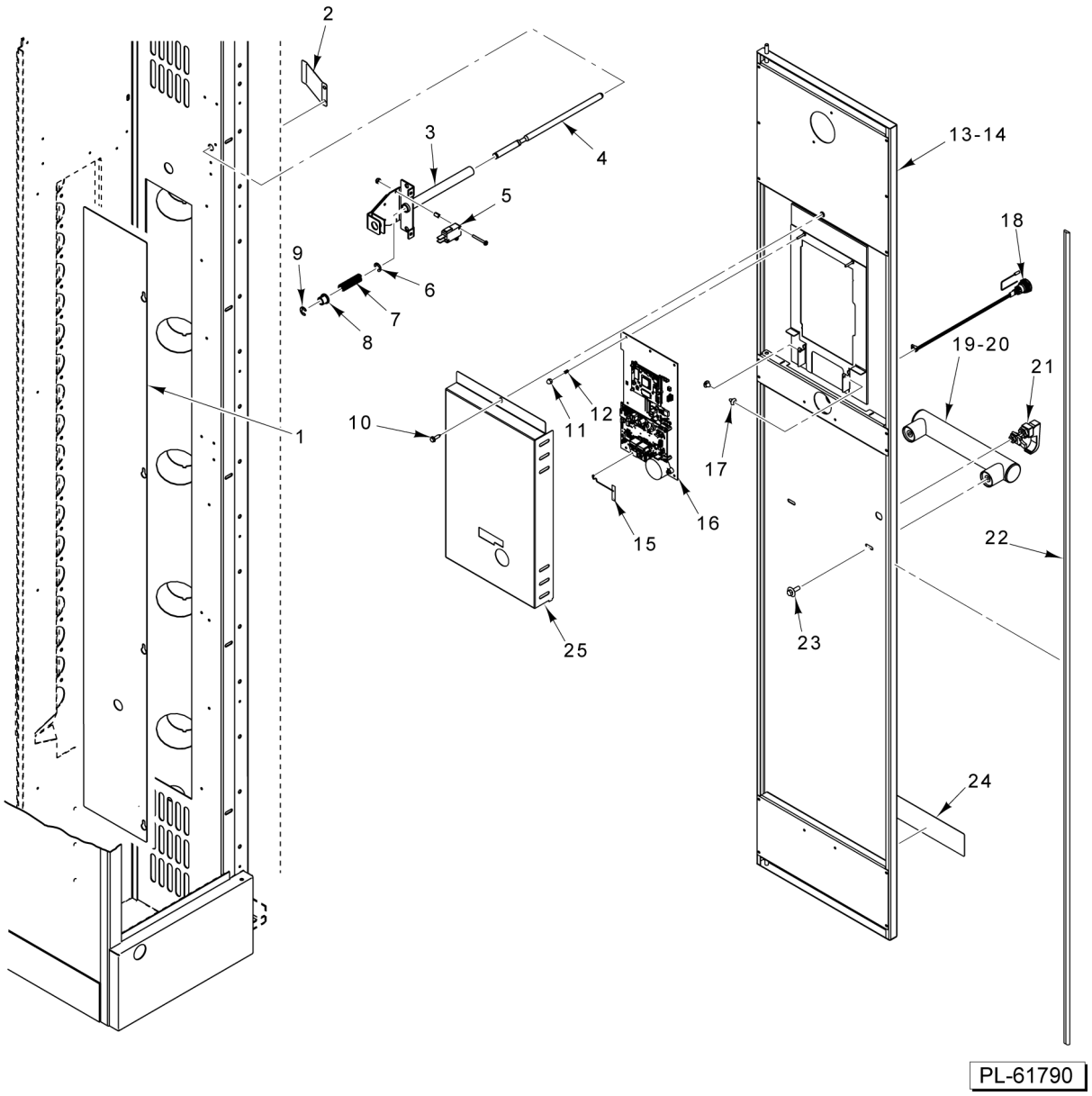

CONTROL CABINET, DOOR, AND CONTROLLER

CONTROL CABINET, DOOR, AND CONTROLLER

ILLUS. PL-61790	PART NO.	NAME OF PART	AMT.
1	01-1M5150-00001	Cover - Light Access	1
2	01-1M6157-00101	Guide - Actuator Rod	1
3	01-1M6478-00001	Door Switch Assy. (Spring Loaded) (Incls. Items 4 thru 9)	1
4	01-1M6478-00101	Rod - Actuator	1
5	01-1000V6-00343	Switch - Lever SPST	2
6	01-1000V1-00078	Clip - E-Door	1
7	01-100V20-00027	Spring - Compression	1
8	01-1M6478-00103	Bearing (Bronze)	1
9	01-1000V1-00078	Clip - E-Door	1
10	01-1000V4-00400	Cap Screw 10-32 x 3/4 Hex Hd. (SST)	1
11	01-1000V4-00624	Cap Nut 6-32 (SST)	2
12	01-100V20-00035	Spring	2
13	01-1M7404-00001	Control Door Assy. (ML-132579)	1
14	01-1M7404-00002	Control Door Assy. (ML-132578)	1
15	01-100V10-00365	Antenna - Internal (Smart Touch Controller) (100mm Cable, U.FL Connector)	1
16	01-100V16-01086	Board - Control (Smart Touch)	1
17	01-100V15-00088	Rubber Button	2
18	01-1M7408-00001	Switch - Push Button	1
19	01-1M6376-00005	Handle - Door (ML-132579)	1
20	01-1M6376-00004	Handle - Control Door (ML-132578)	1
21	01-100V18-00161	Latch	1
22	01-100V21-00092	Gasket - PVC-Extruded ("B" Shape)	1
23	01-1000V4-00283	Mach. Screw 1/4-20 x 3/4 Hex Washer Hd. (SST)	2
24	01-100V16-0290F	Label (Caution Slippery When Wet)	1
25	01-1M7403-00201	Cover - Display	1

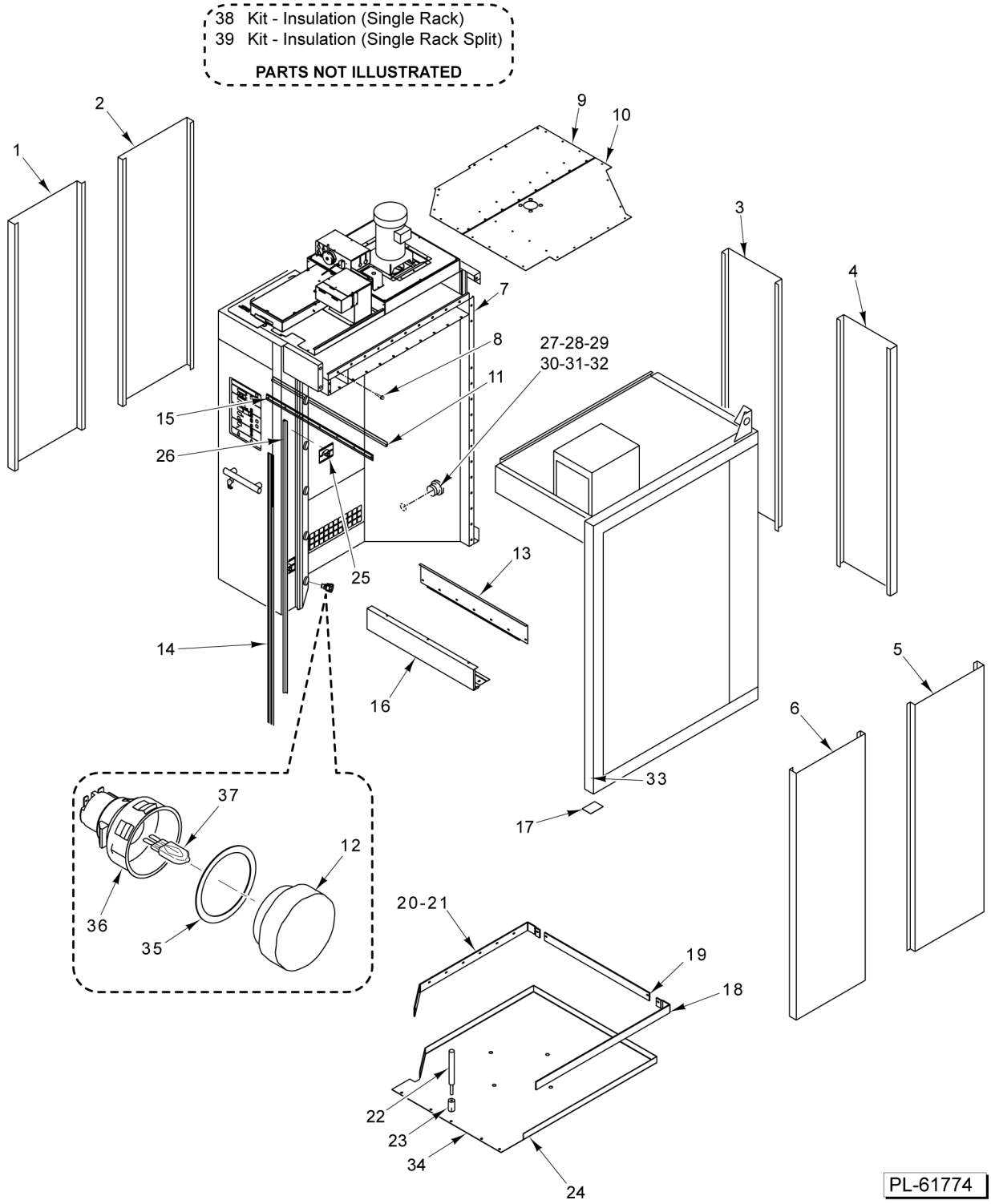

CABINET
(SINGLE RACK) (ML-132579)

CABINET
(SINGLE RACK) (ML-132579)

ILLUS. PL-61774	PART NO.	NAME OF PART	AMT.
1	01-1M5672-00002	Skin - Outer	1
2	01-1M5672-00001	Skin - Outer	1
3	01-1M5672-00002	Skin - Outer	1
4	01-1M5672-00001	Skin - Outer	1
5	01-1M5672-00002	Skin - Outer	1
6	01-1M5672-00001	Skin - Outer	1
7	01-100V21-0065A	Tape - Fiberglass (1/8 x 1)	AR
8	01-1000V4-00283	Mach. Screw 1/4-20 x 3/4 Hex Washer Hd. (SST)	AR
9	01-1M5460-00001	Panel - False Ceiling (LH)	1
10	01-1M5460-00002	Panel - False Ceiling (RH)	1
11	01-100V16-00789	Gasket - Loading Door	AR
12	01-1000V7-0027L	Lens - Glass	1
13	01-1M6119-00103	Cover - Bottom Header	1
14	01-1M6159-00101	Retainer - Gasket Loading Door	2
15	01-1M6159-00103	Retainer - Gasket Horizontal	1
16	01-1M6119-00101	Header - Top Door Loading	1
17	01-1M5610-00201	Shim	AR
18	01-1M7105-00101	Trim - Floor (Right)	1
19	01-1M7105-00102	Trim - Floor (Rear)	1
20	01-1M7105-00103	Trim - Floor (Left)	1
21	01-1000V4-00283	Mach. Screw 1/4-20 x 3/4 Hex Washer Hd. (SST)	AR
22	01-1000V4-0073A	Tool - Setting	1
23	01-1000V4-00073	Anchor - Drop-In 1/4-20	1
24	01-1M7230-00001	Floor - Single	1
25	01-1M6116-00002	Ramp Lock - Weldment	2
26	01-100V16-0789A	Gasket - Loading Door (Vertical)	2
27	01-1M7120-00001	Front Drain Assy. (Incls. Items 28 thru 32)	1
28	01-100V17-00533	Pipe 6-1/2 x 1/2 (SST)	1
29	01-100V17-00538	Elbow 1/2 Street (SST)	2
30	01-100V17-00183	Coupler 1/2 In. (SST)	4
31	01-100V17-00532	Pipe 36 x 1/2 (SST)	1
32	01-100V17-00766	Plug - 1/2 NPT	1
33	01-1M2335-00001	Wheel (For Installation)	1
34	01-1M7105-00001	Kit - Floor Trim (Single) (Incls. Items 7, 18 thru 20)	AR
35	01-1000V7-00059	Ring - Pressure	1
36	01-1000V7-00053	Lamp - Oven (Complete) (Lens, Base, & Bulb) (Incls. Items 12, 35, & 37)	5
37	01-1000V7-00054	Bulb - Halogen G9 Base	AR
38	01-1M7339-00001	Kit - Insulation (Single Rack)	1
39	01-1M7340-00001	Kit - Insulation, Oven (Single Rack Split)	1

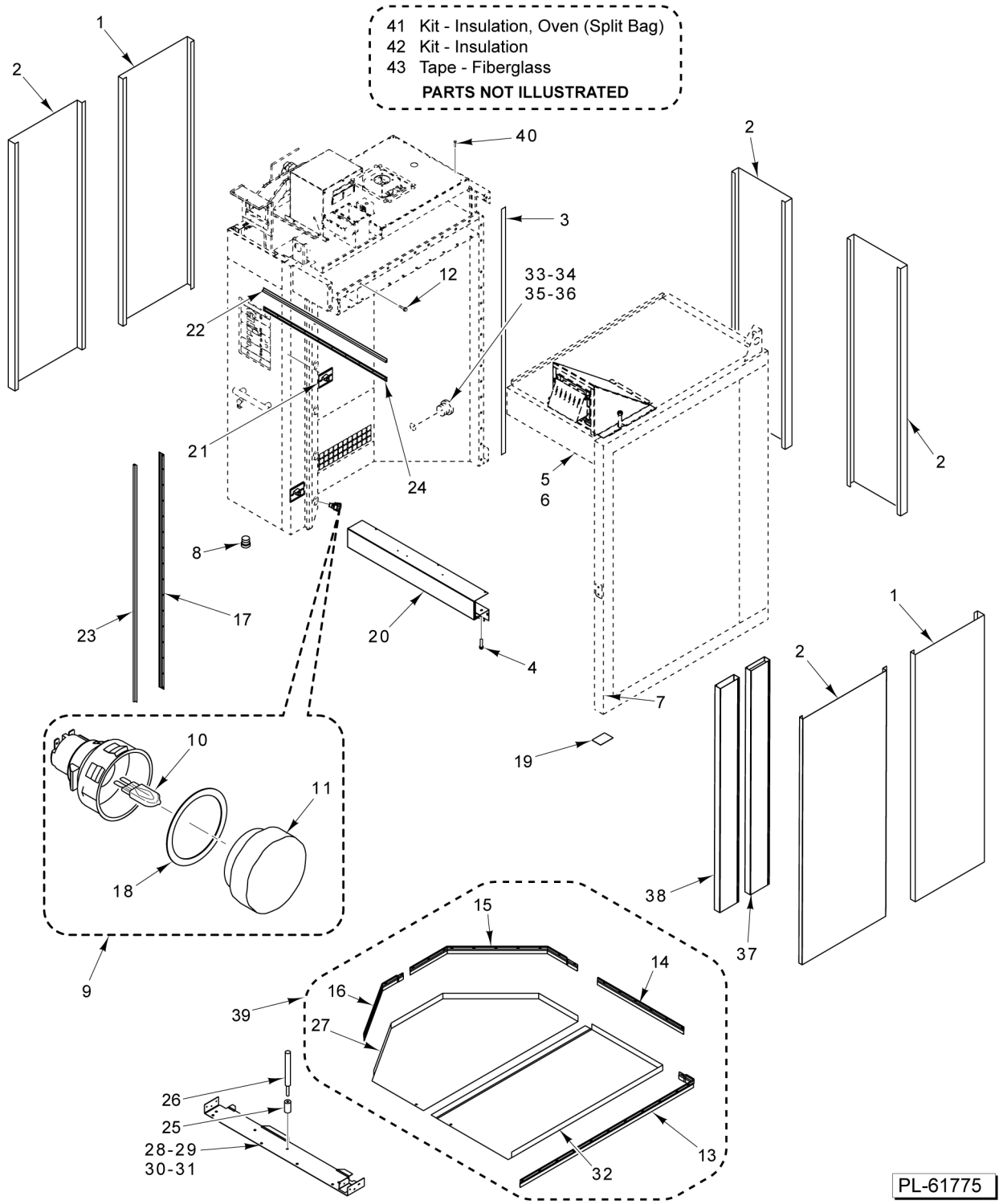

CABINET
(DOUBLE RACK) (ML-132578)

CABINET
(DOUBLE RACK) (ML-132578)

ILLUS. PL-61775	PART NO.	NAME OF PART	AMT.
1	01-1M7061-00202	Skin - Outer (22.475 In.)	2
2	01-1M7061-00201	Skin - Outer (28.625 In.)	4
3	01-100V21-0065A	Tape - Fiberglass (1/8 x 1) (With Adhesive) (Sold Per Foot)	AR
4	01-1000V4-00498	Mach. Screw Pan Hd. 1/4-20 x 3/4, Nylock	AR
5	01-1M7049-00002	Ceiling Assy. - False (LH)	1
6	01-1M7049-00004	Ceiling Assy. - False (RH)	1
7	01-1M2335-00001	Wheel (For Installation)	1
8	01-100V17-00766	Plug - 1/2 NPT	1
9	01-1000V7-00053	Lamp - Oven (Complete) (Lens, Base, & Bulb) (Incls. Items 10, 11, and 18)	5
10	01-1000V7-00054	Bulb - Halogen G9 Base	AR
11	01-1000V7-0027L	Lens - Glass	AR
12	01-1000V4-00058	Mach. Screw 5/16-18 x 3/4 Hex Washer Hd., Gimlet Pt. (SST)	AR
13	01-1M7105-00201	Trim - Floor Assy. (RH) (Use With Item 45)	1
14	01-1M7105-00202	Trim Assy. - Floor (Rear) (Use With Item 45)	1
15	01-1M7105-00203	Trim - Rear Floor (Left Rear) (Use With Item 45)	1
16	01-1M7105-00204	Trim - Front Floor (Left Front) (Use With Item 45)	1
17	01-1M7090-00202	Retainer - Gasket (Loading Door)	2
18	01-1000V7-0027G	Gasket	AR
19	01-1M5610-00201	Shim - Jamb Plate	AR
20	01-1M7031-00002	Header - Loading Door (Top)	1
21	01-1M6116-00002	Ramp Lock - Weldment	2
22	01-100V16-0789B	Gasket - Loading Door (Horizontal) (45.31 In.)	1
23	01-100V16-0789A	Gasket - Loading Door (Vertical) (75.25 In.)	2
24	01-1M7090-00201	Retainer - Gasket (Horizontal)	1
25	01-1000V4-00073	Anchor - Drop-In 1/4-20	1
26	01-1000V4-0073A	Tool - Setting (1/4 In.)	1
27	01-1M7102-00002	Skin - Floor (LH)	1
28	01-1M7047-00201	Threshold Weldment	1
29	01-1000V4-00221	Mach. Screw 1/4-20 x 1/2 Phil. Flat Hd. (SST)	AR
30	01-1000V4-00222	Mach. Screw 1/4-20 x 3/4 Phil. Flat Hd. (SST)	AR
31	01-1000V4-00223	Mach. Screw 1/4-20 x 1 Phil. Flat Hd. (SST)	AR
32	01-1M7101-00002	Skin - Floor (RH)	1
33	01-100V17-00183	Coupler 1/2 In. (SST)	1
34	01-100V17-00533	Pipe 6-1/2 x 1/2 (SST)	1
35	01-100V17-00733	Pipe 1/2 x 2-1/2 NPT (Non-Rear Drain)	1
36	01-100V17-00771	Pipe 1/2 x 47 In	1
37	01-1M2566-00001	Duct - Side (Rear)	1
38	01-1M2089-00001	Duct - Bottom Vent (Front)	1
39	01-1M7104-00002	Kit - Floor (With Install Hardware) (Incls. Items 13 Thru 16, 27, & 32)	1
40	01-1000V4-00426	Screw #10-16 x 3/4 Hex Hd. (Drill Tip) (SST)	AR
41	01-1M7340-00002	Kit - Insulation, Oven (Split Bag)	1
42	01-1M7339-00002	Kit - Insulation (Complete Oven Kit)	1
43	01-100V21-0065A	Tape - Fiberglass (1/8 x 1)	AR

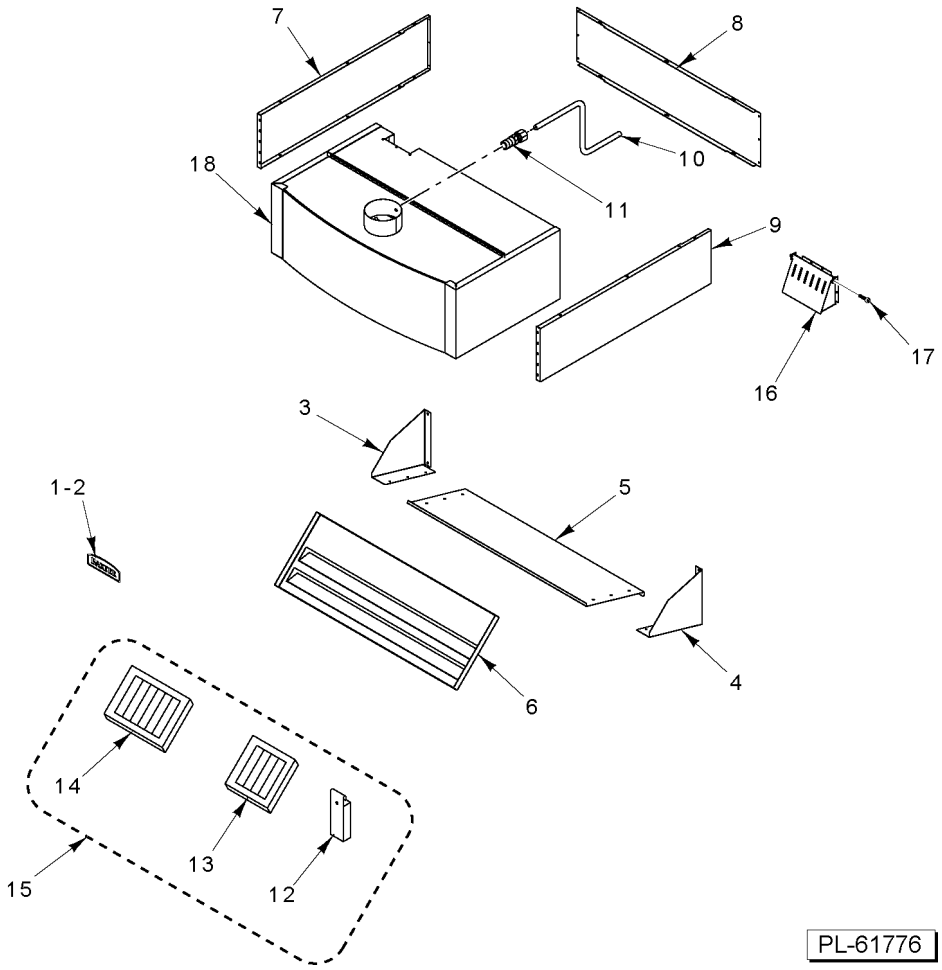

HOOD
(SINGLE RACK) (ML-132579)

HOOD
(SINGLE RACK) (ML-132579)

ILLUS. PL-61776	PART NO.	NAME OF PART	AMT.
1	01-100V16-0772B	Nameplate - Baxter Curved (9 In.)	1
2	01-100V16-0772A	Nameplate - Baxter Flat (9 In.)	1
3	01-1M7125-00001	Bracket - Plenum (Left)	1
4	01-1M7125-00002	Bracket - Plenum (Right)	1
5	01-1M7124-00001	Plenum - Hood	1
6	01-1M7123-00001	Baffle - Hood	1
7	01-1M6115-00101	Trim - Hood Side Single	1
8	01-1M5352-00001	Trim - Rear	1
9	01-1M6115-00101	Trim - Hood Side Single	1
10	01-100V17-00004	Tube 1/4 OD x 100 In. Lg. (Sold Per Inch)	1
11	FP-078-49	Fitting - Tube (1/4 In.) (Brass)	1
12	01-1M3032-00001	Cup - Hood Grease	1
13	01-100V18-00089	Filter - Hood 16 x 20 With Drop	1
14	01-100V18-00088	Filter - Hood 16 x 16 With Drop	2
15	01-1M5931-00001	Kit - Grease Filter (Single) (Incls. Items 12, 13, & 14)	1
16	01-1M5624-00001	Over Pressure Vent Assy. (Incls. Item 17)	1
17	01-1000V4-00572	Shoulder Screw, #10-32 X 3/8 Thread Length, .25 DIA X 3/8 Shoulder Length	2
18	01-1M7121-00003	Kit - Hood (Curved Front) (30 In.) (Standard Ovens) (Incls. Items 1, & 3 thur 9)	1

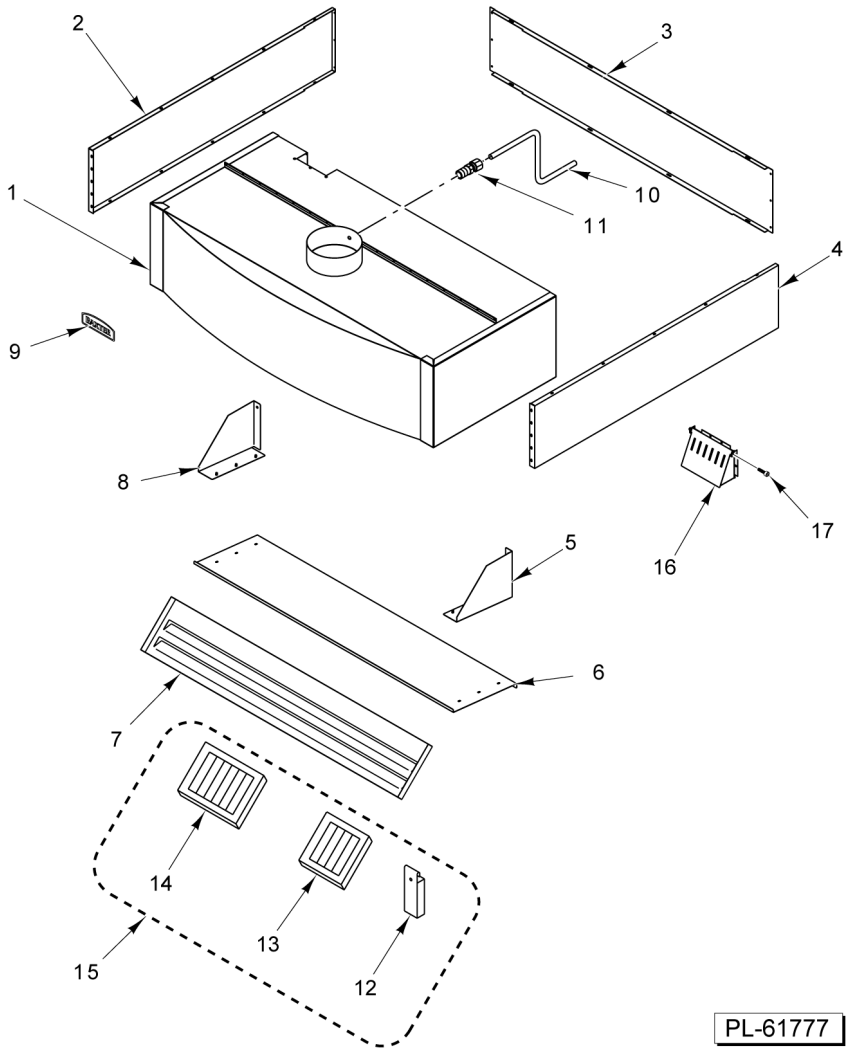

HOOD
(DOUBLE RACK) (ML-132578)

HOOD
(DOUBLE RACK) (ML-132578)

ILLUS. PL-61777	PART NO.	NAME OF PART	AMT.
1	01-1M7121-00004	Hood - Crated Assembly (Curved 30 In.)	1
2	01-1M6115-00201	Trim - Side	1
3	01-1M6115-00202	Trim - Rear	1
4	01-1M6115-00201	Trim - Side	1
5	01-1M7125-00001	Bracket - Plenum (Left)	1
6	01-1M7124-00002	Plenum - Hood	1
7	01-1M7123-00002	Baffle - Hood	1
8	01-1M7125-00002	Bracket - Plenum (Right)	1
9	01-100V16-0772B	Nameplate - Baxter Curved (9 In.)	1
10	01-100V17-00004	Tube 1/4 O.D. x 100 In. Lg. (Alum.) (Sold Per Inch)	AR
11	FP-078-49	Fitting - Tube (1/4 In.) (Brass)	1
12	01-1M3032-00001	Cup - Hood Grease	1
13	01-100V18-00089	Filter - Hood (16 x 20 W/Drop)	1
14	01-100V18-00088	Filter - Hood (16 x 16 W/Drop)	3
15	01-1M5931-00002	Kit - Grease Filter (Incls. Items 12, 13, & 14)	1
16	01-1M5624-00001	Over Pressure Vent Assy. (Incls. Item 17)	2
17	01-1000V4-00572	Shoulder Screw, #10-32 X 3/8 Thread Length, .25 DIA X 3/8 Shoulder Length	1

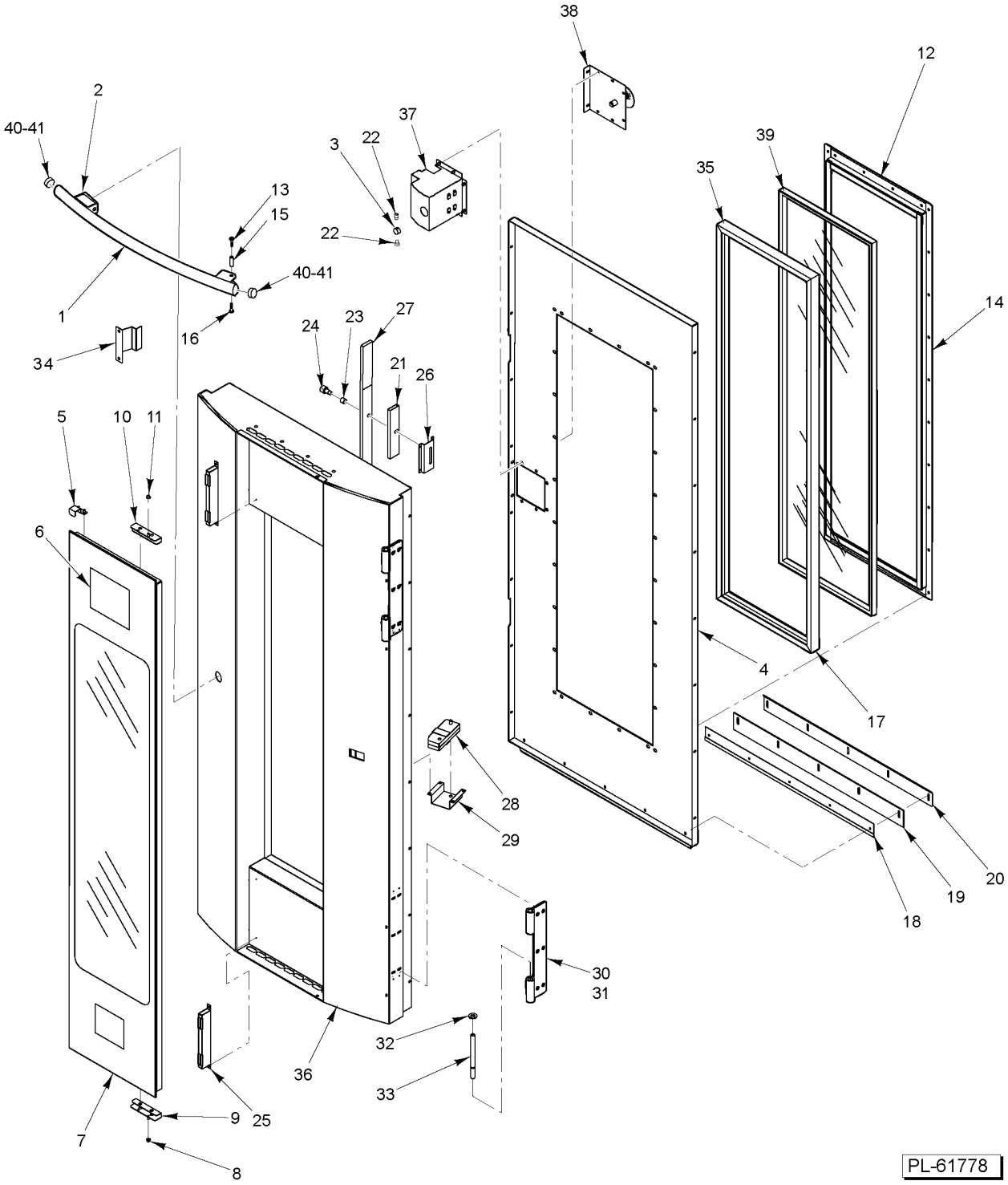

LOADING DOOR
(SINGLE RACK) (ML-132579)

LOADING DOOR
(SINGLE RACK) (ML-132579)

ILLUS. PL-61778	PART NO.	NAME OF PART	AMT.
1	01-1M6376-00001	Handle - Loading Door	1
2	01-100V16-00259	Label - Warning	2
3	01-1M6101-00102	Plug - Handle Mount	1
4	01-1M6101-00101	Skin - Inner Door	1
5	01-1M6110-00005	Bracket	1
6	01-100V16-0168C	Label - Caution (Hot)	4
7	01-1M6946-00001	Kit - Outer Door Glass Assy. (Crated) (Incls. Items 5, 7 thru 10)	1
8	01-1000V0-00095	Bearing - Glass Pivot Sleeve	1
9	01-1M6110-00002	Pivot - Bottom	1
10	01-1M6110-00003	Pivot - Top	1
11	01-1000V0-00095	Bearing - Glass Pivot Sleeve	1
12	01-1M6106-00002	Retainer - Window Horizontal	2
13		Mach. Screw 1/4-20 Phillips Flt. Hd	1
14	01-1M6105-00001	Retainer - Window Vertical	2
15	01-1M6101-00115	Pin - Handle Hinge (Curved)	1
16		Mach. Screw 1/4-20 Phillips Flt. Hd	1
17	01-100V16-00766	Gasket - Window (One-Piece Fused Corners)	1
18	01-1M6101-00112	Sweep - Inner Door	1
19	01-100V16-0779A	Gasket - Door Sweep	1
20	01-1M6101-00113	Sweep - Outer Door	1
21	01-1M6101-00210	Bearing - Lock Bar	2
22	01-1000V4-00369	Cap Screw 1/4 x 1/4 Hex Socket Hd. (Zinc-Plated)	AR
23	01-1M7093-00103	Sleeve - Roller	1
24	01-1000V0-00135	Bearing - Door Latch Roller	2
25	01-1M6149-00001	Magnet - Outer Door Weldment	2
26	01-1M6101-00109	Lock - Retainer Bar	2
27	01-1M7099-00001	Bar - Lock	2
28	01-1M6166-00001	Bracket - Handle Pivot	1
29	01-1M6166-00002	Support - Handle Pivot	1
30	01-1M5918-00003	Hinge Assy. - Jamb Hinge (Incls. Item 31, 32, & 33)	2
31	01-1M5918-00301	Hinge - Door (Female)	2
32	01-1000V0-00080	Bearing - Door Hinge (Brass)	4
33	01-1M5918-00201	Pin - Hinge Loading Door	4
34	01-1M6526-00001	Bracket - Actuator, Door Switch	1
35	01-100V21-0065A	Tape - Fiberglass (1/8 x 1)	AR
36	01-1M6199-00001	Door Assy. (Incls. Items 1 thru 35, 39, 40, & 41)	1
37	01-1M6108-00001	Latch Assy. (Mechanism)	1
38	01-1M7343-00001	Handle - Interior Door	1
39	01-100V16-00765	Glass - Double Pane	1
40	00-913135-00228	Plug - Snap In (Round)	2
41	01-1M6103-0203B	Cap - End (Door Handle) (Oval)	AR

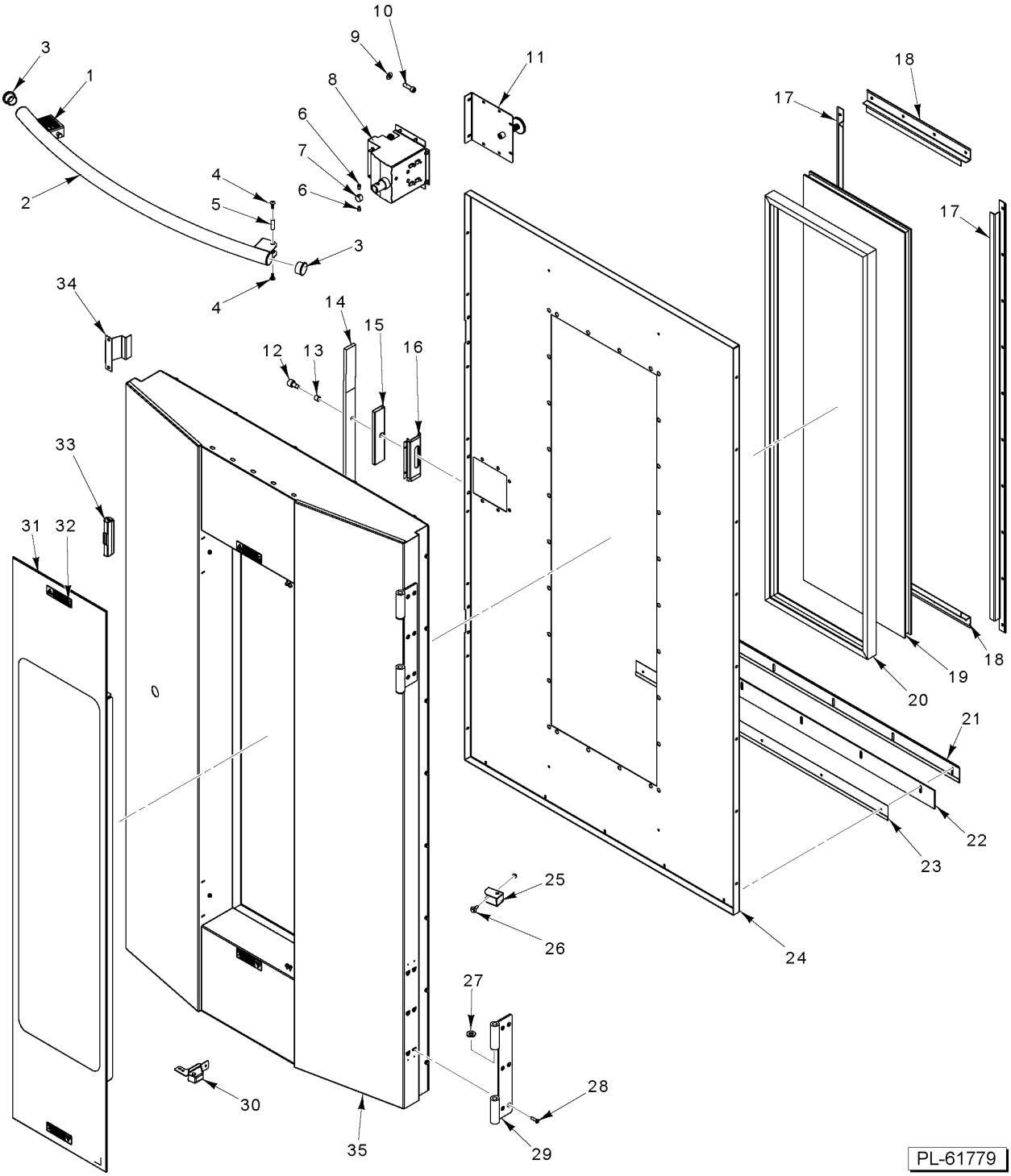

LOADING DOOR
(DOUBLE RACK) (ML-132578)

LOADING DOOR
(DOUBLE RACK) (ML-132578)

ILLUS. PL-61779	PART NO.	NAME OF PART	AMT.
1	01-100V16-00259	Label - Warning	2
2	01-1M7081-00002	Handle - Loading Door (Incls. Items 1 & 3)	1
3	00-913135-00228	Plug - Snap In (Round)	2
4	01-1000V4-00432	Mach. Screw 1/4-20 x 3/4 Phil. Pan Hd	AR
5	01-1M6101-00115	Pin - Handle Hinge (Curved)	1
6	01-1000V4-00369	Cap Screw 1/4 x 1/4 Hex Socket Hd. (Zinc-Plated)	2
7	01-1M6101-00102	Plug - Handle Mount	1
8	01-1M7095-00001	Latch Assy. (Mechanism)	1
9	01-1000V4-00364	Washer 0.375 x 0.812 x 1/6	1
10	01-1000V4-00531	Screw 3/8 x 1-1/4 (SST)	1
11	01-1M7343-00005	Handle - Interior Door	1
12	01-1000V0-00135	Bearing - Door Latch Roller	2
13	01-1M7093-00103	Sleeve - Roller	1
14	01-1M7099-00001	Bar - Lock	1
15	01-1M6101-00210	Bearing - Lock Bar	2
16	01-1M6101-00109	Lock - Retainer Bar	1
17	01-1M6105-00001	Retainer - Window Vertical	2
18	01-1M6106-00002	Retainer - Window Horizontal	2
19	01-100V16-00765	Glass - Double Pane	1
20	01-100V16-00766	Gasket - Window (One-Piece Fused Corners) (Outer Door)	1
21	01-1M6101-00203	Sweep - Outer Door	1
22	01-100V16-0779B	Gasket - Door Sweep	1
23	01-1M6101-00202	Sweep - Inner Door	1
24	01-1M7093-00201	Skin - Inner Door	1
25	01-1M7093-00202	Bracket - Handle Pivot	1
26	01-1000V4-00283	Mach. Screw 1/4-20 x 3/4 Hex Washer Hd. (SST)	2
27	01-1000V0-00080	Bearing - Door Hinge (Brass)	4
28	01-1000V4-00499	Mach. Screw 1/4-20 x 1" Phillips Flt Hd (W/Patch) (SST)	AR
29	01-1M5918-00301	Hinge - Door (Female)	2
30	01-1M7434-00002	Hinge Assy. (Outer Door)	2
31	01-1M6946-00002	Kit - Outer Door Glass Assy. (Incls. Item 32)	1
32	01-100V16-0168C	Label - Caution	4
33	01-1M7433-00002	Magnet	2
34	01-1M6526-00001	Bracket - Actuator, Door Switch	1
35	01-1M6199-00004	Door Assy. (Crated)	1

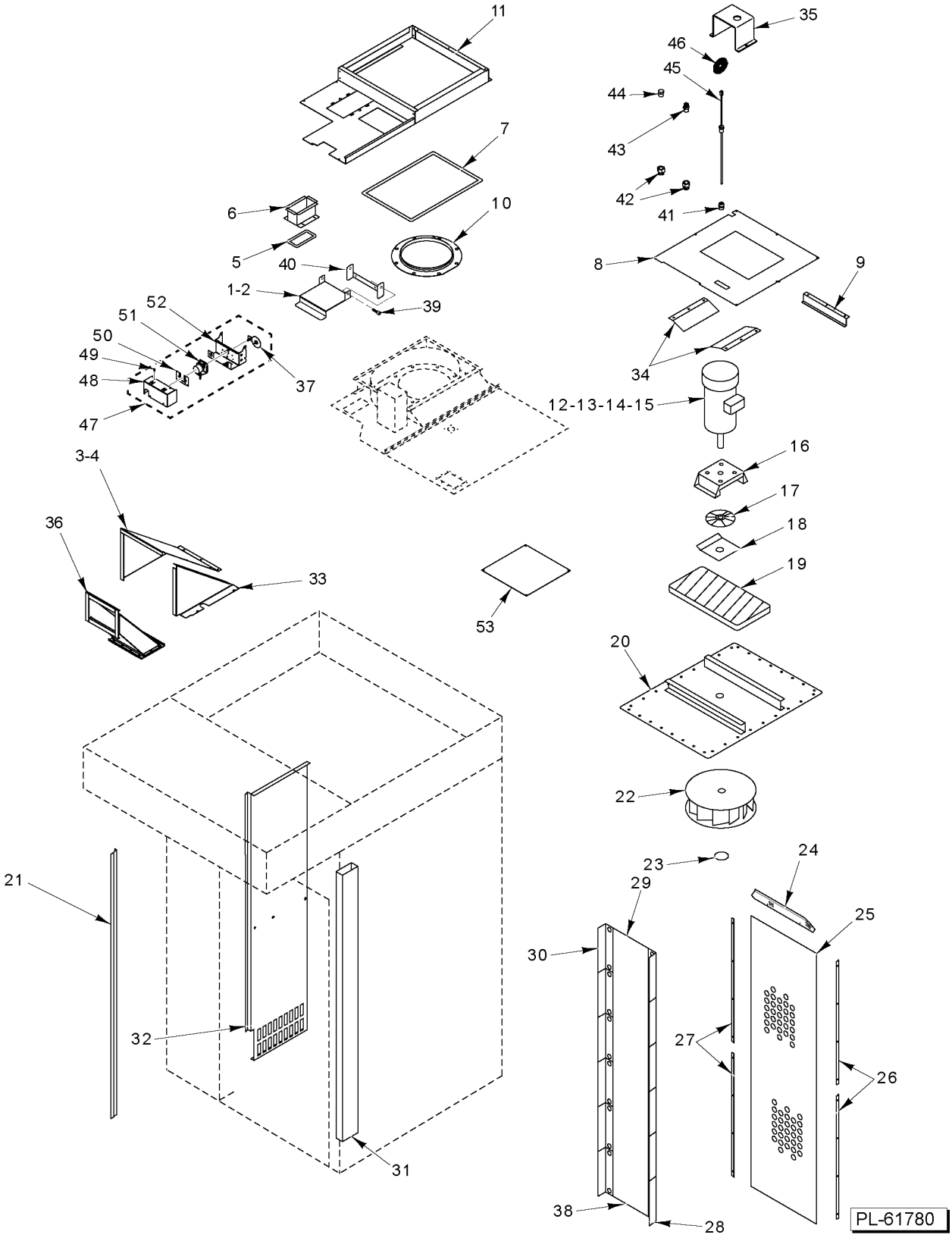

BLOWER, PANELS, AND VENTS
(SINLGE RACK) (ML-132579)

BLOWER, PANELS, AND VENTS (SINLGE RACK) (ML-132579)

ILLUS. PL-61780	PART NO.	NAME OF PART	AMT.
1	01-1M6549-00001	Vent - Intake Lid	1
2	01-100V16-00682	Gasket - Vent Duct	1
3	01-1M6814-00001	Duct Assy. (Incls. Items 4 & 33)	1
4	01-1M6814-00101	Cover - Duct (Side)	1
*5	01-100V21-00072	Rope - Glass (3/4 Dia.)	AR
6	01-1M5462-00001	Weldment - Rope Gasket	1
*7	01-100V21-0065A	Tape - Fiberglass (1/8 x 1)	AR
8	01-1M5542-00001	Cover - Blower Insulation	1
9	01-1M2227-00001	Liner - Blower Insulation Cover	2
10	01-1M2451-00001	Bell - Inlet	1
11	01-1M6141-00001	Body - Insulation Blower Cover (LH)	1
12	01-1M2060-00002	Blower Assy. (3 Ph.) (Incls. Items 14, 16 thru 20, 22, & 23)	1
13	01-1M2060-00004	Blower Assy. (1 Ph.) (Incls. Items 15 thru 20, 22, & 23)	1
14	01-1000V8-00052	Motor - Blower (3 Ph., 1-1/2 Hp.)	1
15	01-1000V8-00067	Motor - Blower (1 Ph., 2 Hp.)	1
16	01-1M1360-00001	Mount - Blower Motor	1
17	01-1M2458-00001	Heat Slinger Assy	1
18	01-1M1794-00001	Cover - Blower Insulation	1
19	01-1M1795-00001	Insulation - Blower	1
20	01-1M2059-00001	Mount - Blower Weldment	1
21	01-1M5476-00001	Bracket - Mounting (Suction Panel)	1
22	01-1000V8-00041	Wheel - Blower (15 In. Dia.)	1
23	01-1000V1-00028	Ring - Snap	1
24	01-1M2101-00004	Z-Bar (Pressure Panel)	1
25	01-1M2572-00001	Screen - Pressure Panel	1
26	01-1M2479-00002	Retainer - Pressure Screen (RH)	2
27	01-1M2479-00003	Retainer - Pressure Screen (LH)	2
28	01-1M5459-00002	Shutter - Pressure Panel 97 Deg	6
29	01-1M5523-00001	Body - Pressure Panel Shutter Support	1
30	01-1M5459-00001	Shutter - Pressure Panel 90 Deg. (#2 Bend At 7 Deg.)	6
31	01-1M2089-00001	Duct - Bottom Vent	1
32	01-1M6964-00001	Panel - Suction	1
33	01-1M6814-00102	Cover - Duct (Top)	1
34	01-1M1895-00001	Cover - Blower Insulation	2
35	01-1M1433-00001	Protector - Thermocouple	1
36	01-1M6803-00001	Duct - Vent	1
37	01-1M7410-00001	Vent Cam Assy	1
38	01-1M5458-00001	Panel - Pressure Shutter Assy. (Incls. Items 28, 29, & 30)	1
39	01-1000V4-00572	Shoulder Screw, #10-32 X 3/8 Thread Length, .25 DIA X 3/8 Shoulder Length	2
40	01-1M6550-00101	Bracket - Vent Lid	1
41	01-100V17-00257	Coupling 1/4 NPT (Brass)	1
42	01-100V17-00281	Coupler - Reducer 3/8 to 1/4	2
43	01-100V17-00304	Kit - Stuffing Box	1
44	01-100V17-00259	Plug - Pipe 3/8 NPT (Brass)	1
45	01-100V10-00307	Sensor - Temp (9 In.)	1
46	01-100V10-00361	Extender - Cable	1
47	01-1M7409-00001	Vent Motor Assy. (Incls. Items 37, & 48 thru 52)	1
48	01-1M7409-00102	Cover - Vent	1
49	01-1000V4-00474	Screw 10-32 x 1/2 Hex Washer Hd. (Zinc)	AR
50	01-1M7409-00103	Retainer - Vent	1
51	01-1000V8-00150	Motor - Vent Damper	1
52	01-1M7409-00101	Mount - Vent Bracket	1
53	01-1M2466-00001	Cover - Outer Exhaust Hole	1

* (Sold Per Inch)

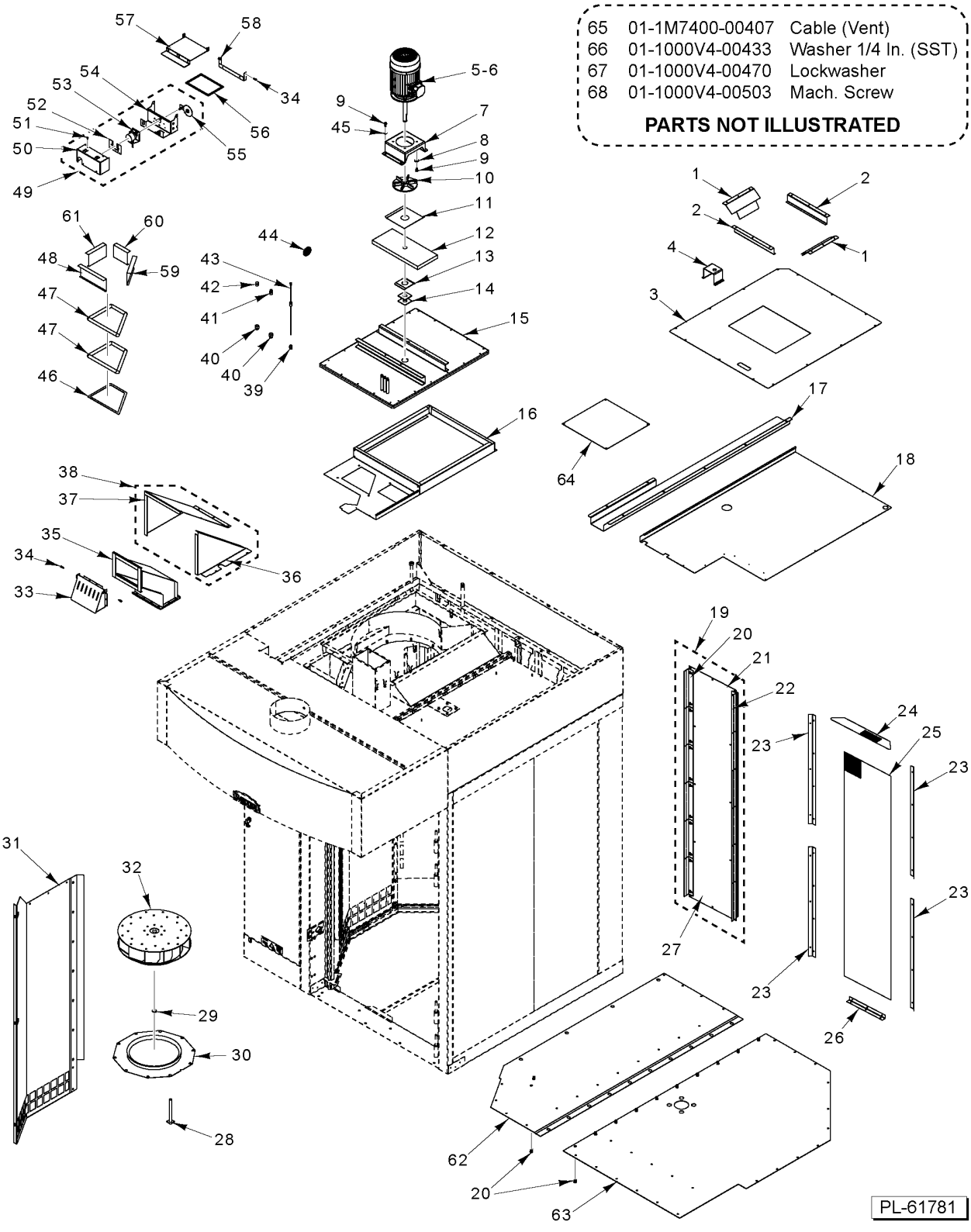

BLOWER, PANELS, AND VENTS
(DOUBLE RACK) (ML-132578)

BLOWER, PANELS, AND VENTS (DOUBLE RACK) (ML-132578)

ILLUS. PL-61781	PART NO.	NAME OF PART	AMT.
1	01-1M1895-00001	Cover - Blower Insulation	2
2	01-1M2227-00001	Liner - Blower Insulation Cover	2
3	01-1M6955-00205	Cover - Blower Insulation	1
4	01-1M1433-00001	Protector - Thermocouple	1
5	01-1000V8-00052	Motor - Blower (3 Ph., 1-1/2 Hp.)	1
6	01-1000V8-00067	Motor - Blower (1 Ph., 2 Hp.)	1
7	01-1M1360-00001	Mount - Blower Motor	1
8	01-1000V4-00438	Washer 3/8	4
9	01-1000V4-00437	Screw 3/4-16 x 3/4	8
10	01-1M2458-00001	Heat Slinger Assy	1
11	01-1M1794-00001	Cover - Blower Insulation	1
12	01-1M1795-00001	Insulation - Blower	1
13	01-1M1359-00001	Seal - Retainer	1
14	01-1M1361-00001	Seal - Retainer	2
15	01-1M7058-00002	Weldment - Blower Mount	1
16	01-1M7059-00002	Body - Insulation Blower Cover	1
17	01-1M7060-00202	Ceiling Skin - Channel Access	1
18	01-1M7060-00201	Ceiling Skin - Body (RH)	1
19	01-1M5177-00001	Pressure Panel Assy	1
20	01-1000V4-00122	Insert - Threaded 1/4-20	AR
21	01-1M2096-00002	Body - Pressure Panel Shutter Support	1
22	01-1M5459-00002	Shutter - Pressure Panel 97 Deg	6
23	01-1M5686-00206	Retainer - Pressure Panel	4
24	01-1M5686-00207	Retainer - Pressure Panel Top	1
25	01-1M2572-00001	Screen - Pressure Panel	1
26	01-1M5686-00205	Retainer - Pressure Panel	1
27	01-1M5459-00001	Shutter - Pressure Panel 90 Deg	6
28	01-1M6774-00001	Tube - Weldment Highlimit	1
29	01-1000V1-00028	Ring - Snap	1
30	01-1M7056-00002	Bell - Inlet	1
31	01-1M7051-00002	Panel - Suction	1
32	01-1000V8-00058	Wheel - Blower (18 In. Dia.)	1
33	01-1M5624-00001	Over Pressure Vent Assy	1
34	01-1000V4-00572	Shoulder Screw, #10-32 X 3/8 Thread Length, .25 DIA X 3/8 Shoulder Length	4
35	01-1M7066-00002	Duct - Vent	1
36	01-1M6814-00101	Cover - Duct (Side)	1
37	01-1M6814-00102	Cover - Duct (Top)	1
38	01-1M6814-00001	Duct Assy	1
39	01-100V17-00257	Coupling 1/4 NPT (Brass)	1
40	01-100V17-00281	Coupler - Reducer 3/8 to 1/4	2
41	01-100V17-00304	Kit - Stuffing Box	1
42	01-100V17-00259	Plug - Pipe 3/8 NPT (Brass)	1
43	01-100V10-00307	Sensor - Temp (9 In.)	1
44	01-100V10-00361	Extender - Cable	1
45	01-1000V4-00439	Lockwasher 3/8 Internal	4
46	01-1M5982-00204	Collector (Top Gap Filler)	1
47	01-100V21-00072	Rope - Glass (3/4 Dia.)	AR
48	01-1M5015-00001	Retainer - Exhaust Stack Packing, Front	1
49	01-1M7409-00001	Vent Motor Assy. (Incls. Items 50 thru 55)	1
50	01-1M7409-00102	Cover - Vent	1
51	01-1000V4-00474	Screw 10-32 x 1/2 Hex Washer Hd. (Zinc)	AR
52	01-1M7409-00103	Retainer - Vent	1
53	01-1000V8-00150	Motor - Vent Damper	1
54	01-1M7409-00101	Mount - Vent Bracket	1
55	01-1M7410-00001	Vent Cam Assy	1

BLOWER, PANELS, AND VENTS (DOUBLE RACK) (ML-132578)

ILLUS. PL-61781	PART NO.	NAME OF PART	AMT.
56	01-100V16-00682	Gasket - Vent Duct (Sold per Inch)	1
57	01-1M6549-00001	Vent - Intake Lid	1
58	01-1M6550-00101	Bracket - Vent Lid	1
59	01-1M5015-00002	Retainer - Exhaust Stack Packing (Right)	1
60	01-1M5015-00003	Retainer - Exhaust Stack Packing (Rear)	1
61	01-1M5015-00004	Retainer - Exhaust Stack Packing (Left)	1
62	01-1M7049-00002	Ceiling Assy. - False (LH) (Incls. Item 20)	1
63	01-1M7049-00004	Ceiling Assy. - False (RH) (Incls. Item 20)	1
64	01-1M2466-00001	Cover - Outer Exhaust Hole	1
65	01-1M7400-00407	Cable (Vent)	1
66	01-1000V4-00433	Washer 1/4 In. (SST)	AR
67	01-1000V4-00470	Lockwasher 1/4 In. (SST)	AR
68	01-1000V4-00503	Mach. Screw 1/4-20 x 1/2 In. (SST)	AR

NOTES

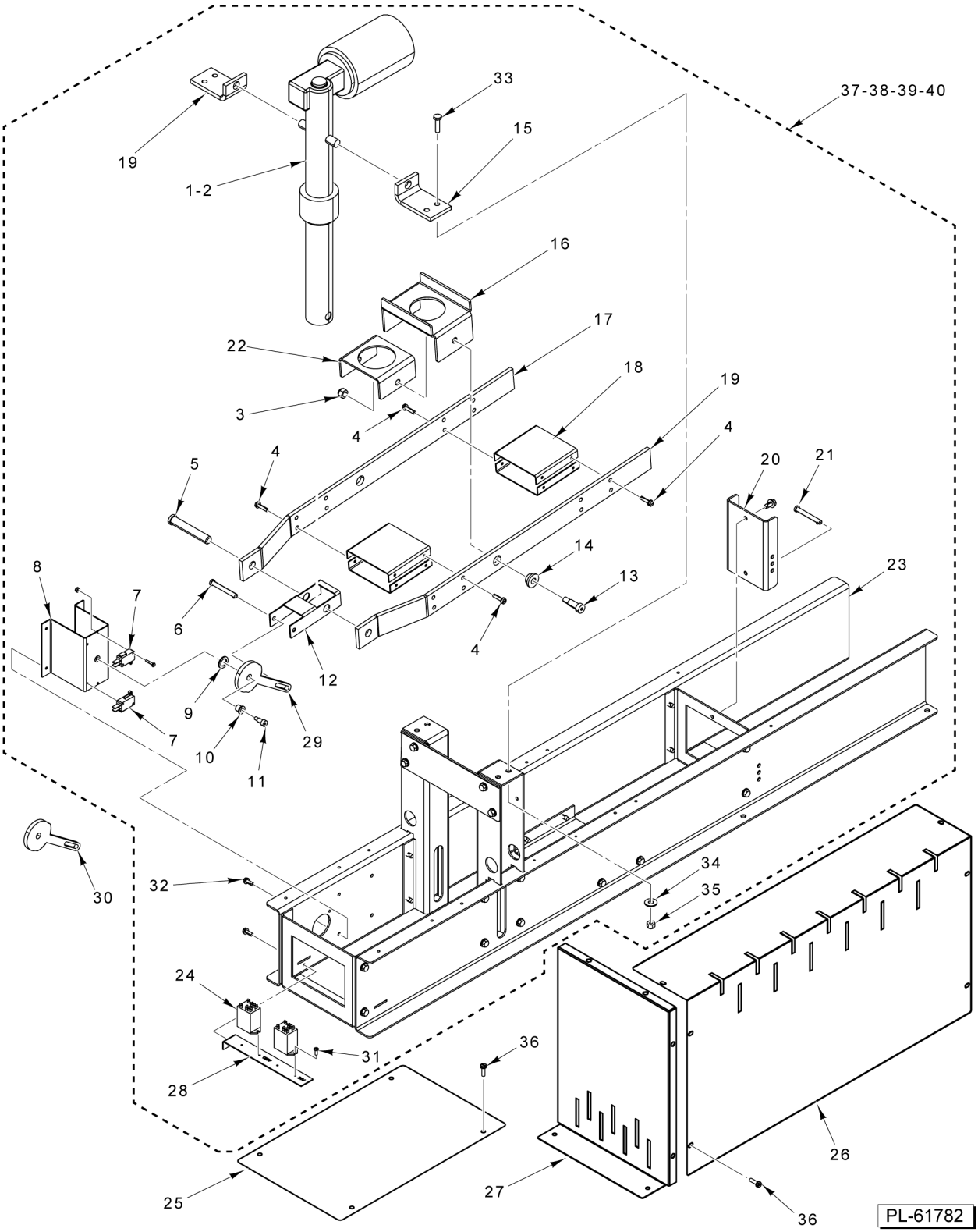
37-38-39-40
33
15
19
1-2
16
17
22
18
19
3
4
4
4
5
20
21
14
13
23
8
7
6
4
12
9
29
7
10
11
30
32
34
35
24
31
36
28
26
25
27
36
PL-61782

LIFTER

LIFTER

ILLUS. PL-61782	PART NO.	NAME OF PART	AMT.
1	01-1M7545-00001	Kit - Rack Lift Actuator (ML-132521 to ML-132578)	1
*2	01-1000V8-0158C	Capacitor - 30uF / 300Vac (Type 1 Heavy Duty)	1
3	01-1000V4-00380	Nut 5/16-18 NYLOCK	2
4	01-1000V4-00543	Screw Hex Hd. 10-32 x 3/4	AR
5	01-1000V1-00086	Pin - Clevis (1/2 x 3 In.)	1
6	01-1000V1-00087	Pin - Clevis (1/4 x 2 In.)	1
7	01-1000V6-00343	Switch - Lever SPST	2
8	01-1M6603-00001	Bracket Assy. - Switch	1
9	01-1000V0-00139	Bearing - Flanged Sleeve	1
10	01-1000V4-00433	Washer 1/4 In. (SST)	1
11	01-1000V4-00572	Shoulder Screw, #10-32 X 3/8 Thread Length, .25 DIA X 3/8 Shoulder Length	1
12	01-1M6600-00204	Arm - Lift Switch Actuating	1
13	01-1000V4-00379	Bolt - Shoulder	2
14	01-1000V0-00121	Bearing	2
15	01-1M6600-00202	Bracket - Mounting (Linear Actuator)	1
16	01-1M6601-00103	Support - Rotator	1
17	01-1M6601-00101	Arm - Lifting	1
18	01-1M6601-00102	Brace - Lifting Arm	4
19	01-1M6601-00101	Arm - Lifting	1
20	01-1M6600-00203	Bracket - Support	1
21	01-1000V1-00087	Pin - Clevis (1/4 x 2 In.)	2
22	01-1M6601-00104	Support - Rotator	1
23	01-1M6599-00001	Lifter Body Assy. (Single Rack)	1
24	01-1000V6-00271	Relay - D.P.D.T. (1/2 Hp., 120 VAC)	2
25	01-1M6608-00003	Cover - Front	1
26	01-1M6608-00002	Cover - Side	2
27	01-1M6608-00001	Cover - Front/Back	2
28	01-1M6600-00104	Bracket - Relay	1
29	01-1M6600-00205	Cam - Lift Switch (B, C Style Lift)	1
30	01-1M6600-00605	Cam - Lift Switch (A Style Lift) (Costco)	1
31	01-1000V4-00510	Screw Mach. - Pan Head (6-20 x 0.375)	4
32	01-1000V4-00436	Screw 1/4-20 x 1/2 Hex Hd	AR
33	01-1000V4-00417	Mach. Screw Hex Hd. 1/4-20 x 3/4 In	4
34	01-1000V4-00416	Nut Hex 1/4-20	AR
35	01-1000V4-00433	Washer 1/4 In. (SST)	AR
36	01-1000V4-00474	Screw 10-32 x 1/2 Hex Washer Hd. (Zinc)	AR
37	01-1M7551-00003	Rack Lift Assy. (B, C Style Lift)	1
38	01-1M6599-00002	Lifter Body Assy	1
39	01-1M7551-00004	Rack Lift Assy. (B or C Type Lifter)	1
40	01-1M7551-00008	Rack Lift Assy. (A Type Lifter)	1

* For Use With 01-1000V8-00158 Actuator Only

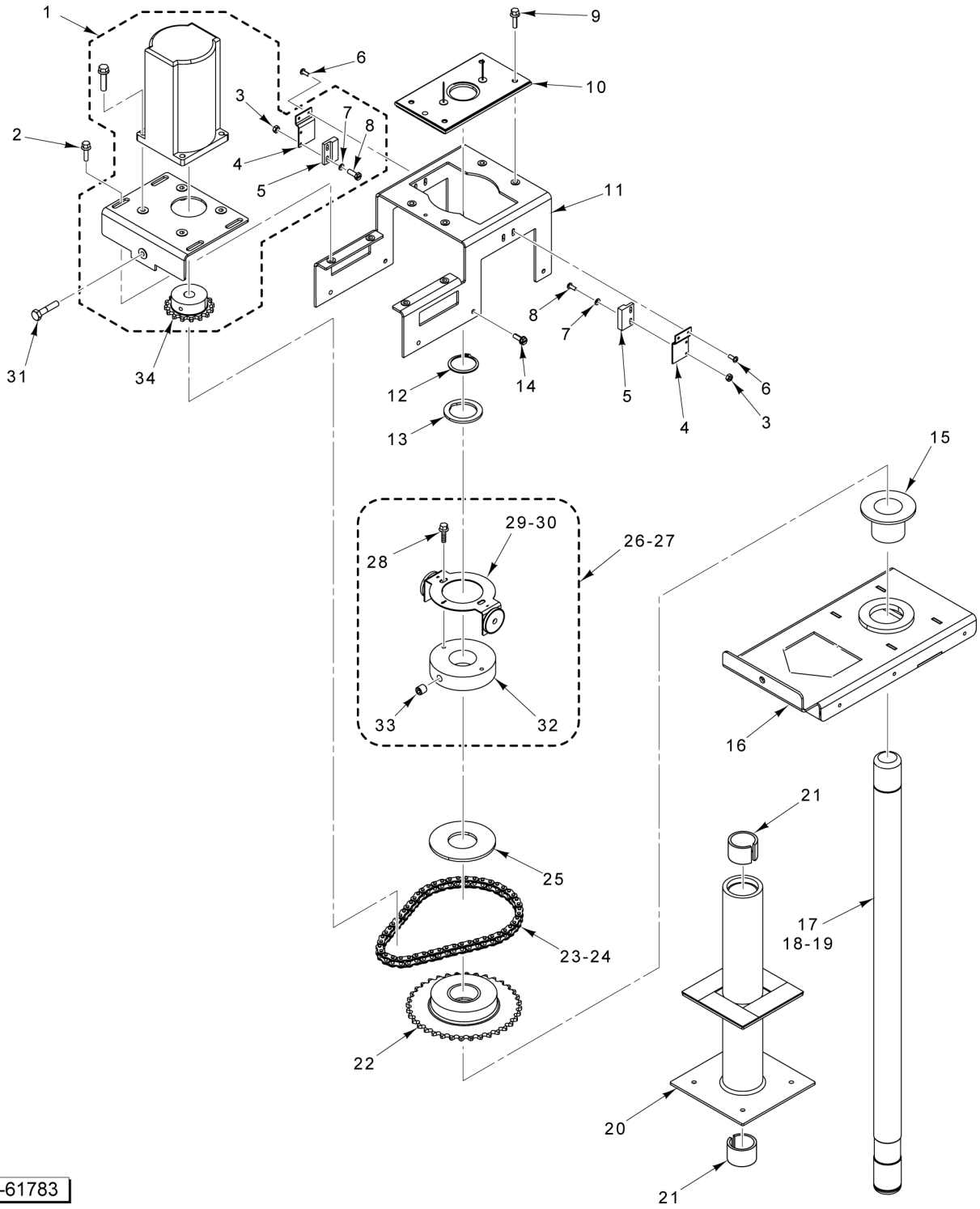
1
2
3
4
5
6
7
8
9
10
11
12
13
14
15
16
17
18-19
20
21
22
23-24
25
26-27
28
29-30
31
32
33
34
PL-61783

ROTATOR

ROTATOR

ILLUS. PL-61783	PART NO.	NAME OF PART	AMT.
1	01-1M7318-00001	Rotation Motor Assy. (Incls. Items 3 thru 5, 7, 8, & 34)	1
2	01-1000V4-00284	Screw 10-32 x 3/4 Hex Washer Hd., Serrated Flange (SST)	4
3	01-1000V4-00586	Nut	4
4	01-1M6604-00106	Bracket - Rotate Switch	2
5	01-1M5777-00101	Switch (Magnetic)	2
6	01-1000V4-00515	Screw - Sheet Metal, Pan Hd. 6-32 x 3/8 (Zinc)	4
7	01-1000V4-00585	Flat Washer	4
8	01-1000V4-00584	Screw	4
9	01-1000V4-00284	Screw 10-32 x 3/4 Hex Washer Hd., Serrated Flange (SST)	4
10	01-1M6606-00002	Shaft Alignment Assy	1
11	01-1M6604-00201	Bracket - Mounting	1
12	01-1000V1-00085	Snap Ring	1
13	01-1M6704-00001	Shim - Carrier (Height Adjustment)	1
14	01-1000V4-00385	Screw - Sheet Metal, Hex Hd. 10-16 x 3/4 (SST)	6
15	01-1000V0-00114	Bearing - Flange	1
16	01-1M6605-00001	Rotator - Lifter	1
17	01-1M6773-00101	Shaft - Rotator (A Style) (With Hole for Pin)	1
18	01-1M6604-00105	Shaft - Rotator (B Style)	1
19	01-1M6604-00305	Shaft - Rotator (C Style)	1
20	01-1M6662-00001	Housing - Shaft (Incls. Item 21)	1
21	01-1M7464-00001	Kit - Bearing (Shaft Housing)	1
22	01-1M6610-00001	Sprocket - Rotator	1
23	01-1000V3-0087A	Chain - Roller 20-1/8 In	1
24	01-1000V3-00088	Link - Connecting	AR
25	01-1M6604-00104	Clutch - Slide	1
26	01-1M6629-00003	Magnet Switch Assy. (One Magnet) (C Style) (Incls. Items 28 thru 30, 32, & 33)	1
27	01-1M6629-00004	Magnet Switch Assy. (Two Magnets) (B & C Style) (Incls. Items 28 thru 30, 32, & 33)	1
28	01-1000V4-00284	Screw 10-32 x 3/4 Hex Washer Hd., Serrated Flange (SST)	2
29	01-1M6880-00003	Pointer Assy. (One Magnet) (C Style)	1
30	01-1M6880-00004	Pointer Assy. (Two Magnets) (B Style)	1
31	01-1000V4-00564	Screw, Sheet Metal Hex Hd. W/ Washer 1/4-20 x 1 (SST)	1
32	01-1M6604-00103	Collar, Set - Rotator	1
33	01-1000V4-00161	Screw, Set - Allen (3/8-16)	1
34	01-1000V3-00114	Sprocket (17T)	1

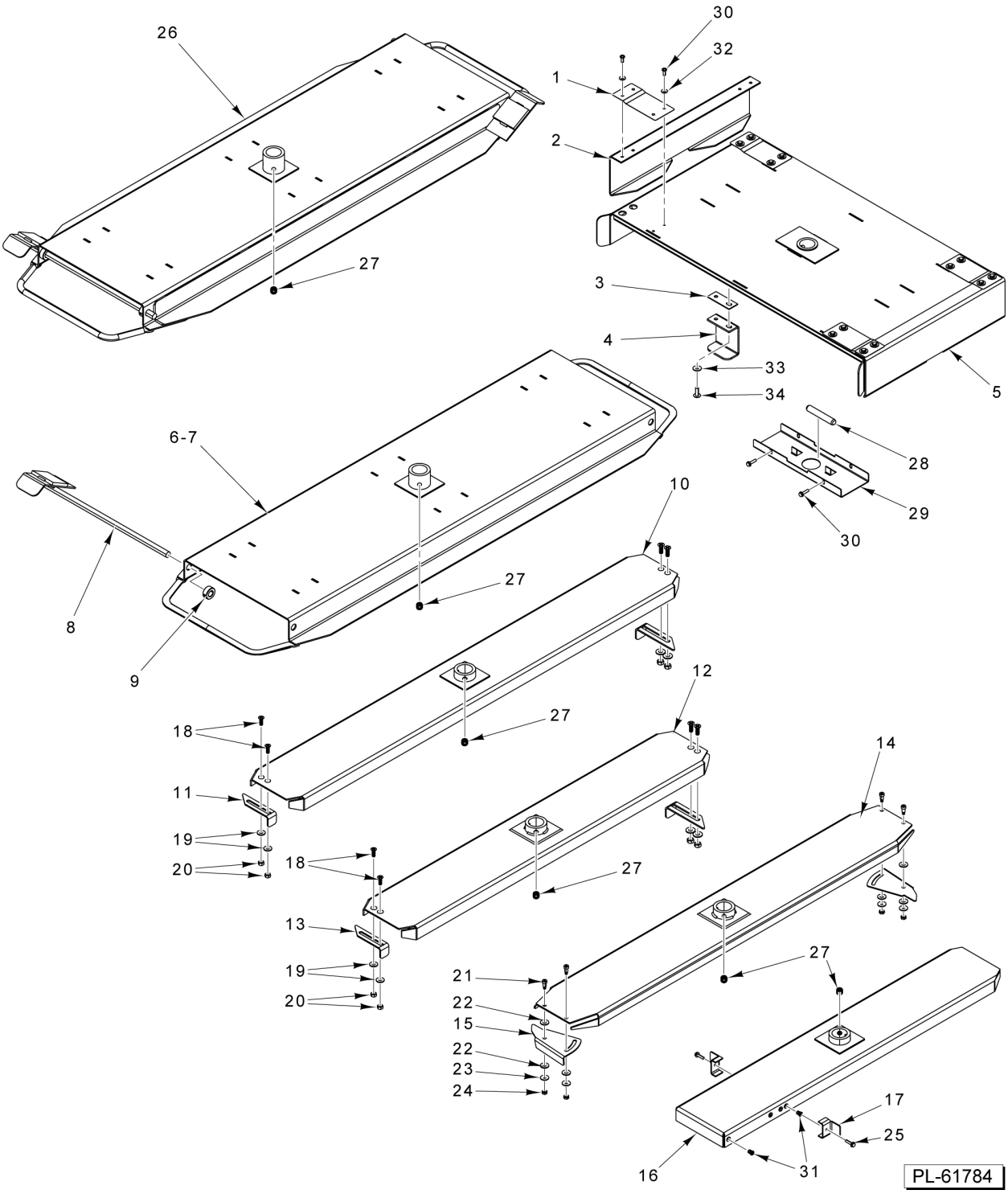
26
27
30
32
1
2
3
4
33
34
5
28
29
30
6-7
8
9
10
27
12
27
18
11
19
20
18
27
13
19
20
14
27
21
22
15
22
23
24
17
25
16
31
PL-61784

CARRIER

CARRIER

ILLUS. PL-61784	PART NO.	NAME OF PART	AMT.
1	01-1M5367-00001	Strap - Side Support	4
2	01-1M5368-00001	Channel - Side Hanger	2
3	01-1M5369-00002	Shim - Support	4
4	01-1M5366-00001	Channel - Support Hanger	2
5	01-1M6772-00001	Carrier (A Style) (Double Rack) (Incls. Items 1 thru 4, 28 thru 30, & 32 thru 34)	1
6	01-1M6622-00002	Carrier (B Style) (Double Rack) (Incls. Items 8, 9, & 27) (15.60 in wide)	1
7	01-1M6622-00001	Carrier (B Style) (Single Rack) (Incls. Items 8, 9, & 27) (15.60 in wide)	1
8	01-1M2580-00002	Stop - Rack Carrier (B Style Carrier)	2
9	01-1000V1-00013	Collar - Set 1/2 In. Dia	4
10	01-1M6770-00003	Carrier (C Style) (42-1/2 In. Stops) (Incls. Items 11, 18 thru 20, & 27)	1
11	01-1M4862-00101	Latch - Carrier	2
12	01-1M6770-00004	Carrier (C Style) (Double Rack) (33 In. Stops) (Incls. Items 13, 18 thru 20, & 27)	1
13	01-1M4862-00101	Latch - Carrier	2
14	01-1M6770-00007	Carrier (C Style) (Panera) (Incls. Items 15, 21 thru 24, & 27)	1
15	01-1M4862-00701	Lock - Carrier (Double Models Only) (Panera Bread Only)	2
16	01-1M6770-00005	Carrier (C Style) (Single Rack) (Incls. Items 17, 25, 27, & 31)	1
17	01-1M4862-00201	Stop - Rack Carrier (C Style Carrier)	2
18	01-1000V4-00074	Mach. Screw 1/4-20 x 3/4 Phil. Flat Hd	4
19	01-1000V4-00433	Washer 1/4 In. (SST)	4
20	01-1000V4-00599	Nut 1/4 In. (SST) (Toplock - Vibration Resistant)	4
21	01-1000V4-00281	Screw, Shoulder #10-32, 1/4 x 3/8 In. (SST)	4
22	01-1000V4-00433	Washer 1/4 In. (SST)	6
23	01-1000V4-00434	Washer - Flat #10 (SST)	4
24	01-1000V4-00336	Nut #10-32 W/ Lockwasher (SST)	4
25	01-1000V4-00284	Screw 10-32 x 3/4 Hex Washer Hd., Serrated Flange (SST)	2
26	01-1M6622-00004	Carrier (B Style W/Welded Extensions) (16.875 In. Wide) (Incls. Items 8, 9, & 27)	1
27	01-1000V4-00654	Screw - Set 3/8-24 x 3/8 (Knurled Tip) (Knurled Tip)	2
28	01-1M6942-00001	Pin - Locking (A Style Lift 1.25 " Shaft)	1
29	01-1M6772-00101	Plate - Cover, Pin	1
30	01-1000V4-00284	Screw 10-32 x 3/4 Hex Washer Hd., Serrated Flange (SST)	AR
31	01-1000V4-00121	Insert - Threaded 10-32 Hex	6
32	01-1000V4-00434	Washer - Flat #10 (SST)	AR
33	01-1000V4-00433	Washer 1/4 In. (SST)	4
34	01-1000V4-00534	Bolt 1/4-20 x 3/4 In.	4

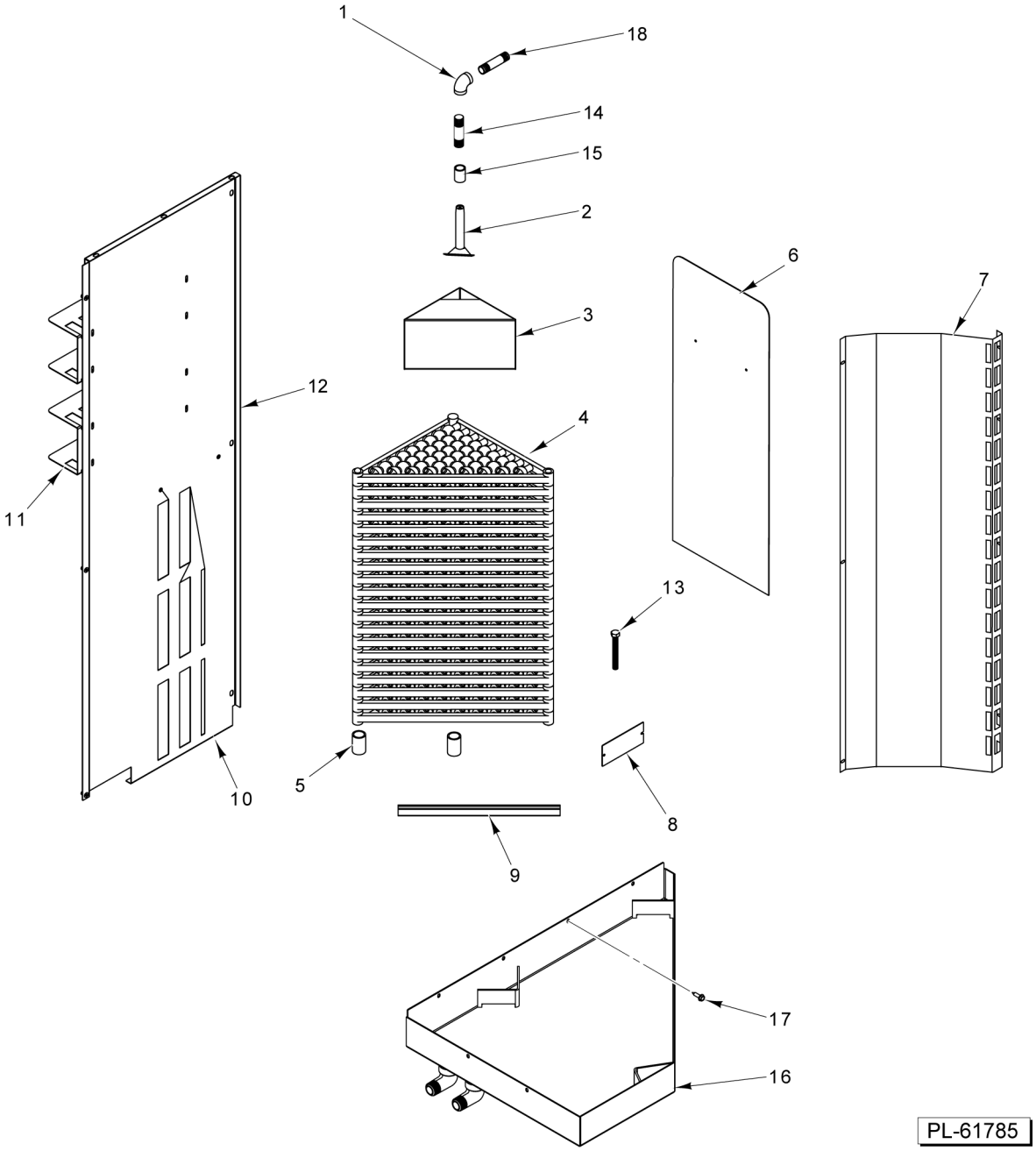

STEAMER ASSEMBLY
(SINGLE RACK) (ML-132579)

STEAMER ASSEMBLY
(SINGLE RACK) (ML-132579)

ILLUS. PL-61785	PART NO.	NAME OF PART	AMT.
1	01-100V17-00347	Elbow 1/2 In. x 90 Deg. (SST)	1
2	01-1M7100-00001	Sprayer - Steam Manifold	1
3	01-1M7065-00001	Angle, Steamer Box	1
4	01-100V16-00529	Casting - Steamer	AR
5	01-1M5536-00001	Support - Steamer Castings	2
6	01-1M6325-00003	Sheet - Splash	1
7	01-1M5474-00001	Panel - Steamer	1
8	01-1M5446-00002	Plate - Steam Loader Bolt Cover	1
9	01-1M5065-00001	Bracket - Water Guide	AR
10	01-1M6965-00001	Panel - Steamer (Rear)	1
11	01-1M6966-00001	Baffle	2
12	01-1M6967-00001	Panel Assy. (Heat Exchanger)	1
13	01-1M2161-00001	Screw - Leveler	1
14	01-100V17-00535	Pipe 1/2 x 14 In. (SST) (SST)	1
15	01-100V17-00183	Coupler 1/2 In. (SST)	1
16	01-1M5429-00001	Pan - Drain	1
17	01-1000V4-00009	Screw - Sheet Metal Hex Hd. #10 X 3/4 In	AR
18	01-100V17-00534	Pipe 1/2 x 3-1/2 (SST)	1

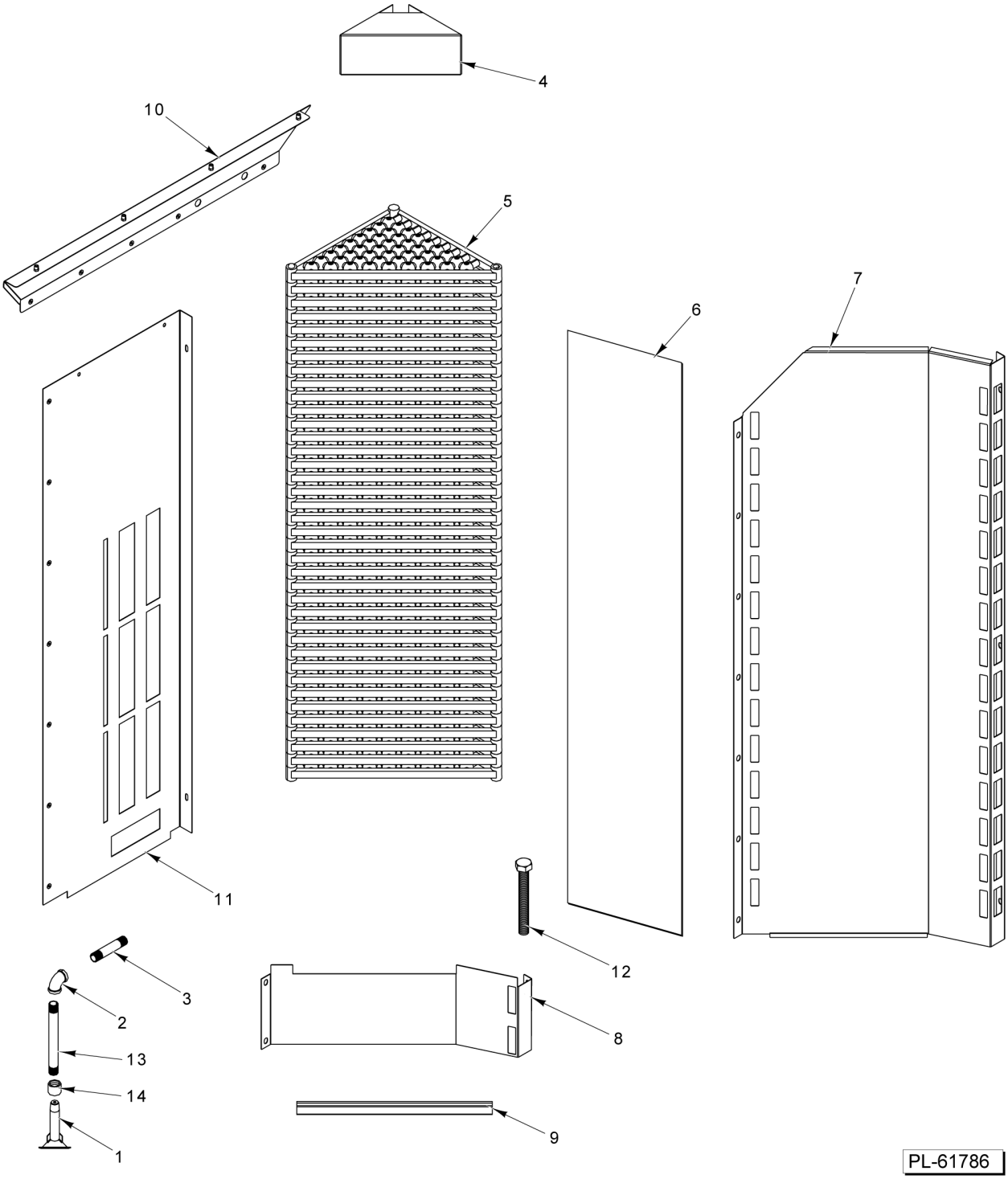

STEAMER ASSEMBLY
(DOUBLE RACK) (ML-132578)

STEAMER ASSEMBLY
(DOUBLE RACK) (ML-132578)

ILLUS. PL-61786	PART NO.	NAME OF PART	AMT.
1	01-1M7100-00001	Sprayer - Steam Manifold	1
2	01-100V17-00347	Elbow 1/2 In. x 90 Deg. (SST)	1
3	01-100V17-00534	Pipe 1/2 x 3-1/2 (SST)	1
4	01-1M7065-00001	Angle, Steamer Box	1
5	01-100V16-00529	Casting - Steamer	28
6	01-1M6325-00002	Sheet - Splash	1
7	01-1M7050-00201	Panel - Steamer Outer	1
8	01-1M7050-00202	Panel - Steamer Bottom	1
9	01-1M5065-00001	Bracket - Water Guide	7
10	01-1M7052-00002	Panel - Suction Top	1
11	01-1M7053-00002	Panel - Steamer (Rear)	1
12	01-1M2161-00001	Screw - Leveler	1
13	01-100V17-00850	Pipe - 1/2 x 15 In	1
14	01-100V17-00183	Coupler 1/2 In. (SST)	1
15	01-1M7106-00001	Pan - Drain	1

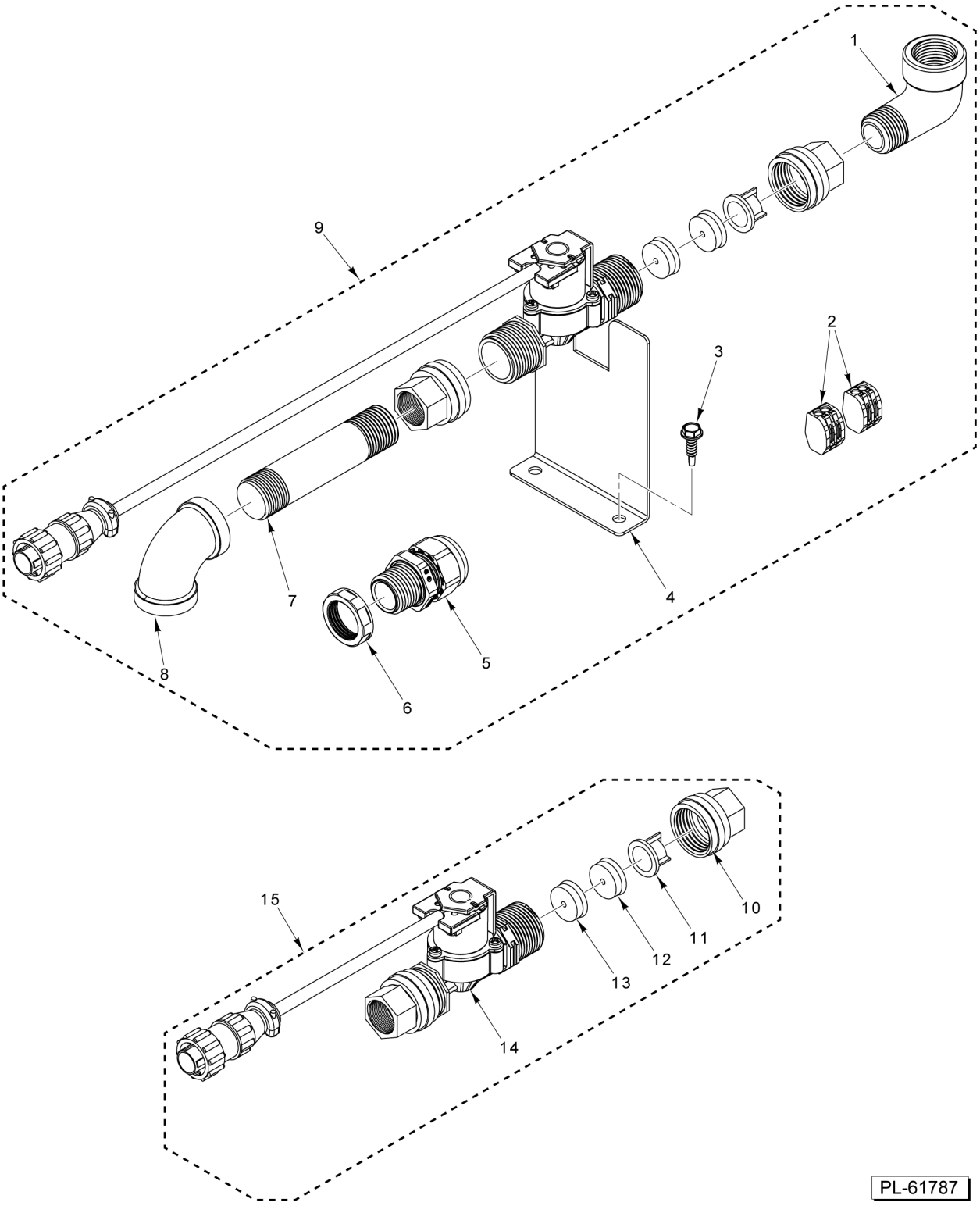

EXTERIOR WATER SUPPLY

EXTERIOR WATER SUPPLY

ILLUS. PL-61787	PART NO.	NAME OF PART	AMT.
1	01-100V17-00538	Elbow 1/2 Street (SST)	1
2	01-1000V5-00362	Block - Terminal (2 Teminals) (W/ Operating Levers)	2
3	01-1000V4-00426	Screw #10-16 x 3/4 Hex Hd. (Drill Tip) (SST)	2
4	01-1M7495-00101	Bracket - Support	1
5	01-100V11-00248	Strain Relief	1
6	01-100V11-00249	Nut - Strain Relief	1
7	01-100V17-00736	Pipe 3-1/2 x 1/2 In	1
8	01-100V17-00347	Elbow 1/2 In. x 90 Deg. (SST)	1
9	01-1M7495-00001	Kit - Steam Solenoid (Incls. Items 1 thru 8, & 15)	AR
10	01-100V17-00830	Adapter - Hose to Pipe 3/4 GHTF x 1/2 NPTF	1
*11	01-100V17-00838	Filter - Solenoid Valve (5 GPM Without Restrictor)	1
12	01-100V17-00840	Restrictor - Flow (White 3 GPM) (Double Rack Oven)	1
13	01-100V17-00839	Restrictor - Flow (Brown 2 GPM) (Single Rack Oven)	1
14	01-1M7493-00001	Solenoid Assy	1
15	01-1M7494-00001	Kit - Water Solenoid (Incls. Items 10 thru 14)	AR

* No Restrictor Used on Panera Bread Double Rack Ovens.

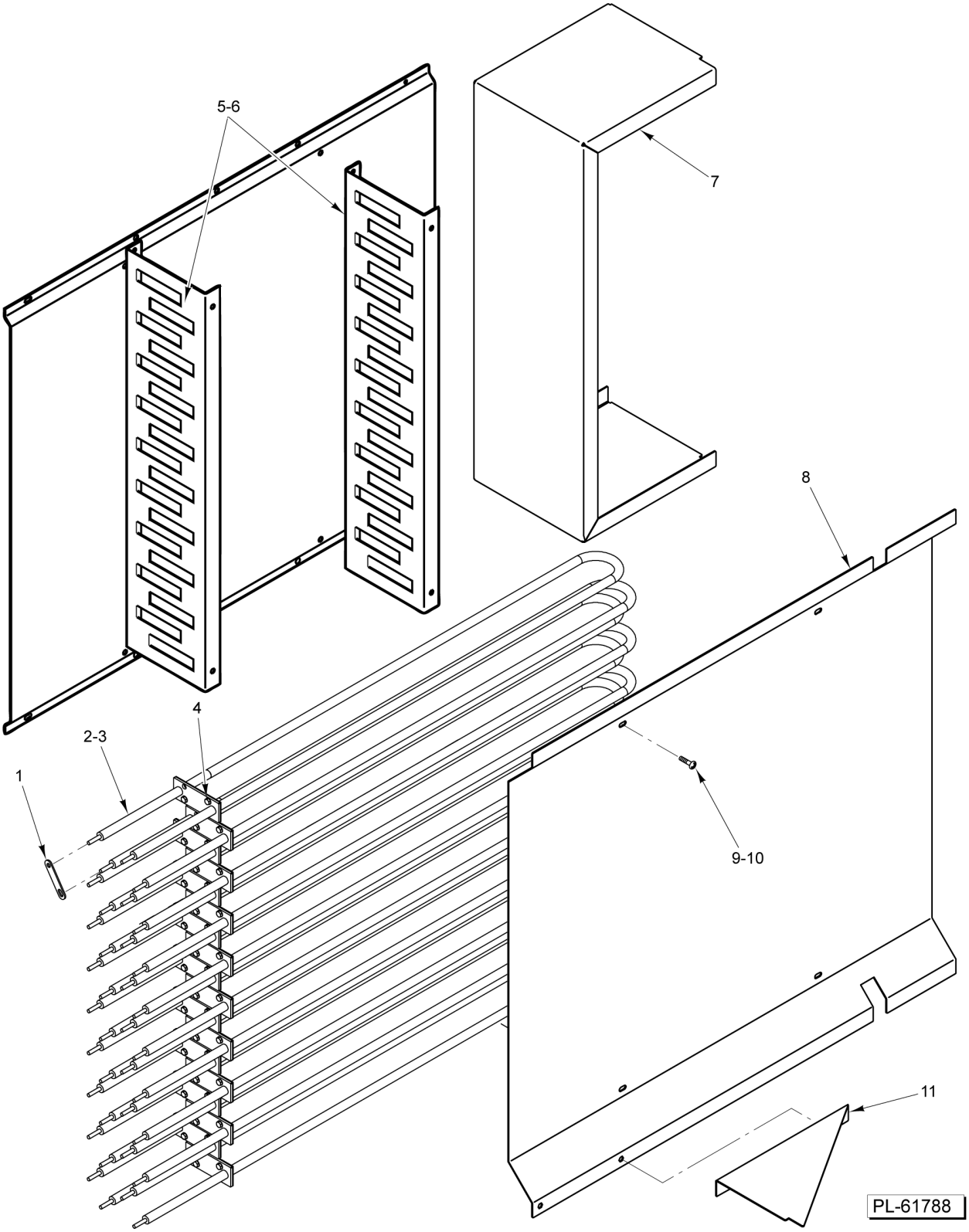

HEATING ELEMENTS

HEATING ELEMENTS

ILLUS. PL-61788	PART NO.	NAME OF PART	AMT.
1	01-1M5578-00001	Jumper - Heater	AR
2	01-100V10-0228A	Element - Heating (208 V., 2850 W.) (18 For Double, 12 For Single)	AR
3	01-100V10-0228B	Element - Heating (240 V., 400 V., 2850 W.) (18 For Double, 12 For Single)	AR
4	01-1000V4-00400	Cap Screw 10-32 x 3/4 Hex Hd. (SST)	AR
5	01-1M5411-00001	Support - Element (Single Rack)	2
6	01-1M5411-00002	Channel - Element Support (Double Rack)	2
7	01-1M5410-00001	Baffle - Rear Filler (Double Rack)	1
8	01-1M5407-00002	Baffle - Side (RH)	1
9	01-1000V4-00121	Insert - Threaded 10-32 Hex	8
10	01-1000V4-00400	Cap Screw 10-32 x 3/4 Hex Hd. (SST)	8
11	01-1M5406-00001	Filler - Corner Baffle (Double Rack)	1