CATALOG OF REPLACEMENT PARTS



OV520G2 GAS RACK OVEN

ML-132576 **OV520G2**

A product of BAXTER MFG. CO., INC. 19220 STATE ROUTE 162 EAST, ORTING, WA 98360

FORM 43377 Rev. G (January 2026)

 © BAXTER MFG. 2026

Table of Contents

5 COMPONENT BOX
7 CONTROL CABINET, DOOR, AND CONTROLLER
9 CABINET
11 HOOD
13 LOADING DOOR
15 LOADING DOOR (SECURITY)
17 BLOWER, PANELS, AND VENTS
21 DRAFT INDUCER
23 JUNCTION BOX ASSEMBLY
25 LIFTER
27 ROTATOR
29 CARRIER
31 STEAMER ASSEMBLY
33 GAS BURNER AND HEAT CIRCULATION
35 GAS SUPPLY PLUMBING
37 EXTERIOR WATER SUPPLY

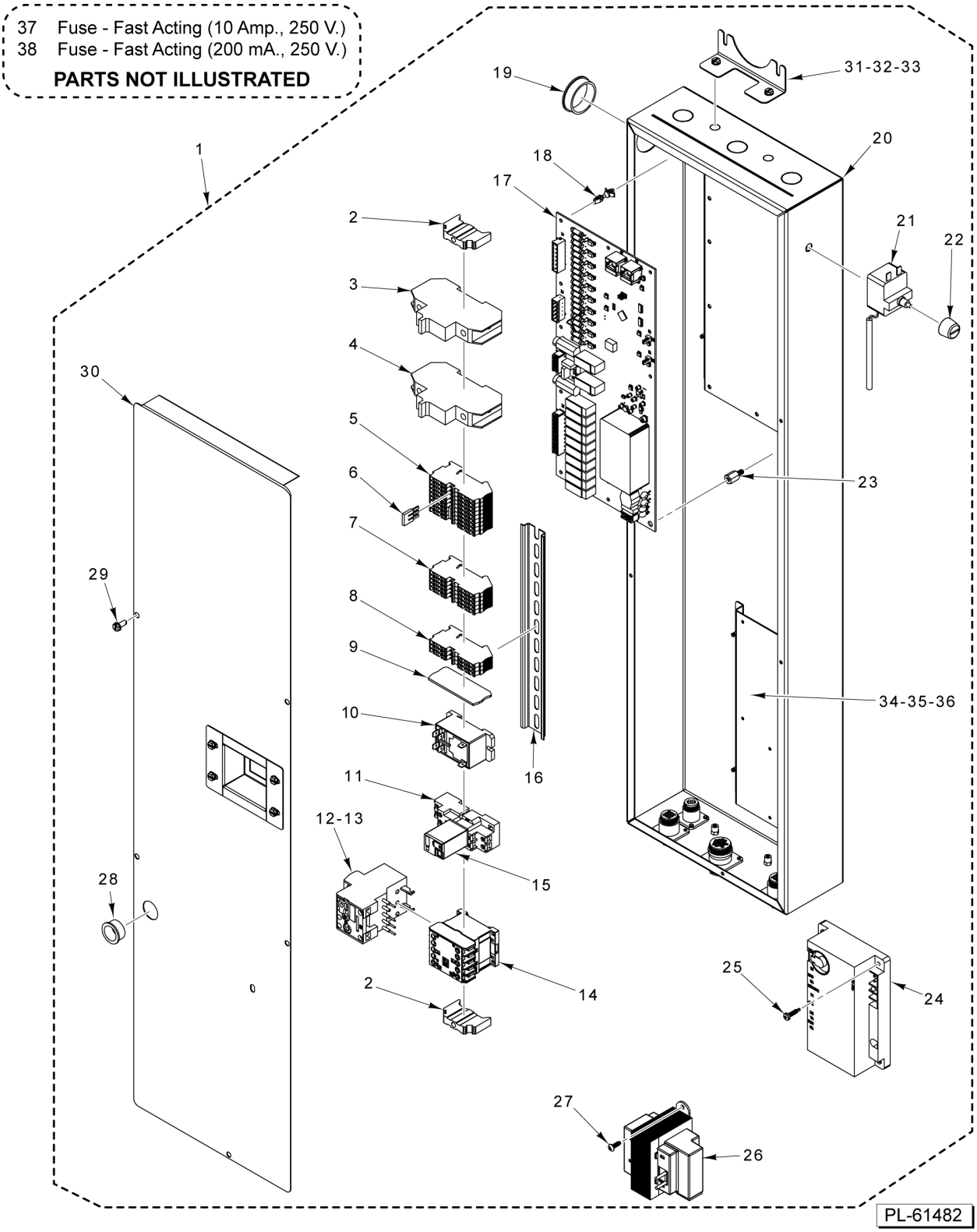

COMPONENT BOX

COMPONENT BOX

ILLUS. PL-61482	PART NO.	NAME OF PART	AMT.
1	01-1M7400-00002	Electrical Box, Assy. (Incls. items 1 thru 32)	1
2	01-1000V5-00396	Stop - End (Din Rail) (35mm)	2
3	01-1000V6-00423	Circuit Breaker (10A)	1
4	01-1000V6-00424	Circuit Breaker (13A)	1
5	01-1000V5-00397	Block - Spring Terminal (4 Wire Gray)	9
6	01-1000V5-00401	Jumper (3-Pole)	2
7	01-1000V5-00398	Block - Spring Terminal (4 Wire Blue)	5
8	01-1000V5-00399	Block - Spring Terminal (4 Wire Green/Yellow)	3
9	01-1000V5-00400	Block - Spring Terminal (End Cap) (4 Wire)	1
10	01-1000V6-00389	Relay, DPST - 1 Hp @ 120V	1
11	01-1000V6-00404	Relay (8 Pin) Din Rail, Mount	1
12	01-1000V6-00399	Overload, Contactor (208-240V, 3Ph) (6.3 Amp.)	1
13	01-1000V6-00408	Overload, Contactor (480V, 3 Ph) (2.8 Amp.)	1
14	01-1000V6-00398	Contactor (208-240/480 V., 3 Ph.) (9 Amp.) (208-240V/480V, 3 Ph.)	1
15	01-1000V6-00405	Relay - Socket, Mount (120Vac DPDT)	1
16	01-100V18-00115	Din Rail (9080-M H) (10 In.)	1
17	01-100V16-01085	Board - I/O	1
18	01-1000V5-00405	Post - Mounting (PCB Support) (0.156 Holes x 0.375 Standoff) (Plastic)	9
19	01-1000V5-00387	Bushing - Snap 1-1/2 In. (Plastic)	1
20	01-1M7400-00020	Electrical Box Metal Assy	1
21	01-1000V6-00406	Thermostat - Hi Limit	1
22	01-1000V6-00407	High Limit Cap	1
23	01-1000V5-00659	Standoff - Threaded 10-32 (0.375 Hex, 0.4375 Lg.) (Aluminum) (Aluminum)	1
24	01-1000V9-00202	Control - Ignition	1
25	01-1000V4-00542	Screw - Phil. Hd. 8-18 x 3/4 (Zinc)	2
26	01-100V10-00358	Transformer (120-480V Pri./24V Sec.)	1
27	01-1000V4-00442	Screw Pan Hd. 8-32 x 1/2 (Zinc)	2
28	01-1000V5-00059	Bushing - Snap 7/8 In. (Plastic) 7/8 In	1
29	01-1000V4-00474	Screw 10-32 x 1/2 Hex Washer Hd. (Zinc)	5
30	01-1M7401-00002	Cover - Electrical Box	1
31	01-1M7400-00204	Bracket	2
32	01-1000V4-00474	Screw 10-32 x 1/2 Hex Washer Hd. (Zinc)	4
33	01-1000V4-00121	Insert - Threaded 10-32 Hex	4
34	01-1M7400-00203	Plate	1
35	01-100V12-00008	Rivet	AR
36	01-1000V4-00270	Insert - Threaded 8-32 Hex	2
37	01-100V10-00372	Fuse - Fast Acting (10 Amp., 250 V.)	1
38	01-100V10-00373	Fuse - Fast Acting (200 mA., 250 V.)	1

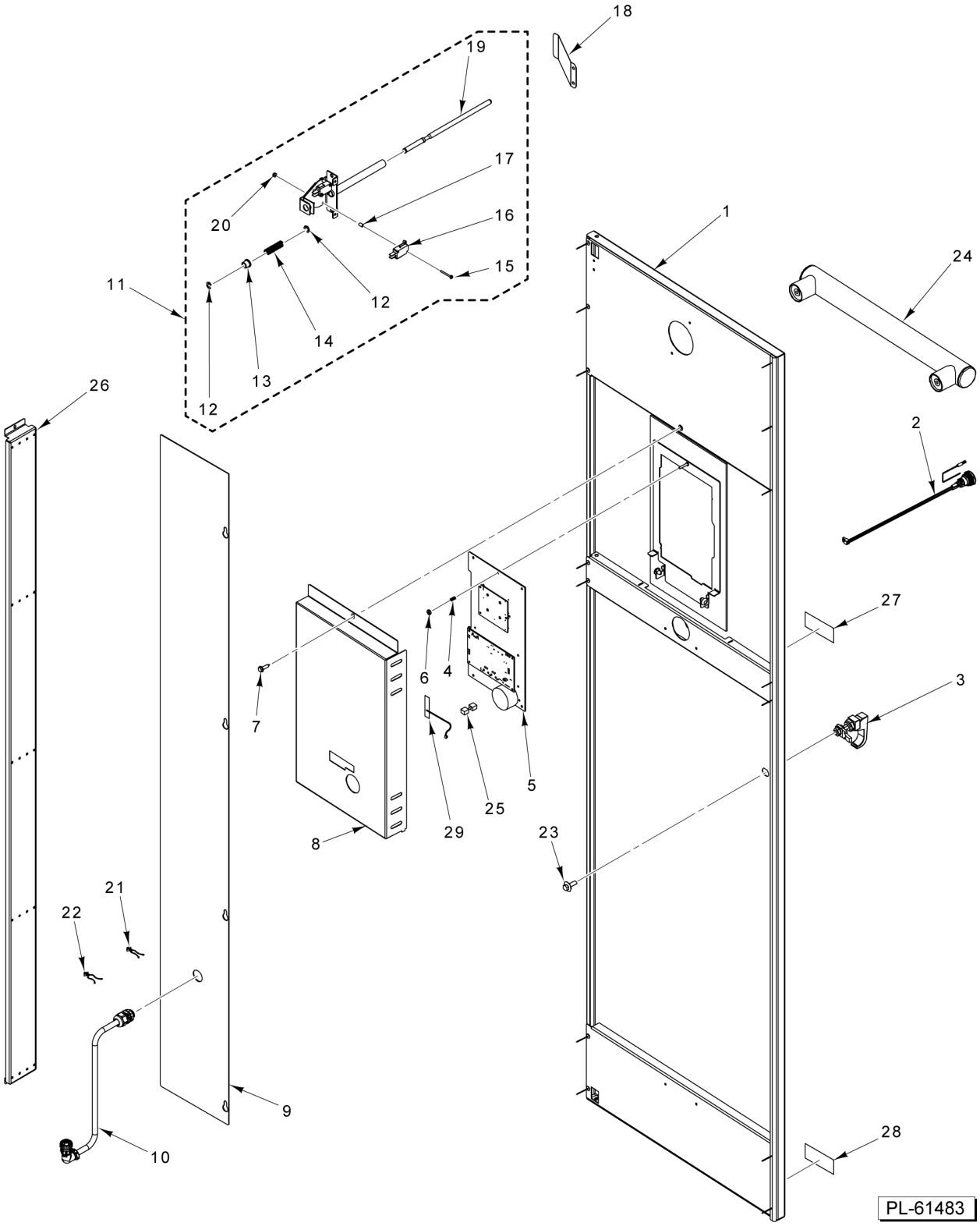

CONTROL CABINET, DOOR, AND CONTROLLER

CONTROL CABINET, DOOR, AND CONTROLLER

ILLUS. PL-61483	PART NO.	NAME OF PART	AMT.
*1	01-1M7404-00002	Control Door Assy. (Control Door W/O Additional Components)	1
2	01-1M7408-00001	Switch - Push Button	1
3	01-100V18-00161	Latch	1
4	01-100V20-00035	Spring	2
5	01-100V16-01086	Board - Control (Smart Touch)	1
6	01-1000V4-00624	Cap Nut 6-32 (SST)	2
7	01-1000V4-00400	Cap Screw 10-32 x 3/4 Hex Hd. (SST)	1
8	01-1M7403-00201	Cover - Display	1
9	01-1M5150-00001	Cover - Light Access	1
10	01-1M7400-00211	Cable, Light	1
11	01-1M6478-00001	Door Switch Assy. (Spring Loaded) (Incls. Items 12 thru 17, 19, & 20)	1
12	01-1000V1-00078	Clip - E-Door	2
13	01-1M6478-00103	Bearing (Bronze)	1
14	01-100V20-00027	Spring - Compression	1
15	01-1000V4-00512	Mach. Screw Hex Hd. 4-40 x 1	4
16	01-1000V6-00343	Switch - Lever SPST	2
17	01-1000V5-00318	Spacer	4
18	01-1M6928-00001	Plate, Actuator	1
19	01-1M6478-00101	Rod - Actuator	1
20	01-1000V4-00355	Nut	4
21	01-1000V5-00388	Standoff .500 x 1.59 In. (Twist Lok) Wire Tires (.19 hole)	15
22	01-1000V5-00359	Standoff .700 x 1.64 In. (Twist Lok) Wire Tires (.19 hole)	4
23	01-1000V4-00283	Mach. Screw 1/4-20 x 3/4 Hex Washer Hd. (SST)	2
24	01-1M6376-00004	Handle - Control Door	1
25	01-100V11-00210	Cable (RJ45, Cat-5) (36 In.)	1
26	01-1M7416-00101	Channel, Cable	1
27	01-100V16-0348F	Label - Gas Shutoff	1
28	01-100V16-00290	Label	1
29	01-100V10-00365	Antenna - Internal (Smart Touch Controller) (100mm Cable, U.FL Connector)	1

* Supplied with glass and board mounting bracket (attached by factory only)

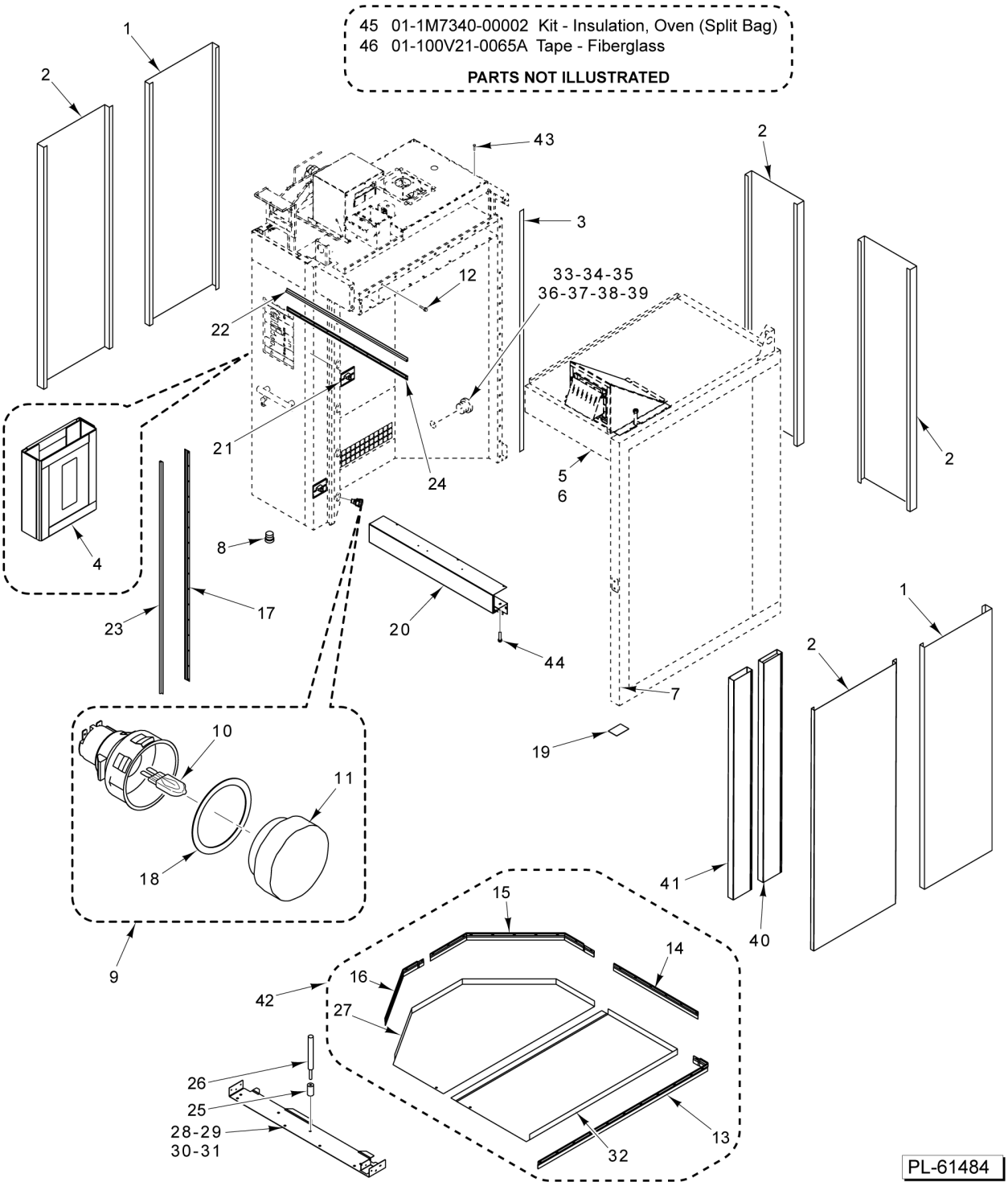
45 01-1M7340-00002 Kit - Insulation, Oven (Split Bag)
46 01-100V21-0065A Tape - Fiberglass
PARTS NOT ILLUSTRATED
1
2
43
2
3
12
33-34-35
36-37-38-39
22
21
24
5
6
2
4
8
17
23
20
44
7
1
2
10
11
19
18
41
40
9
15
14
16
42
27
26
25
28-29
30-31
32
13
PL-61484

CABINET

CABINET

ILLUS. PL-61484	PART NO.	NAME OF PART	AMT.
1	01-1M7061-00202	Skin - Outer (22.475 In.)	2
2	01-1M7061-00201	Skin - Outer (28.625 In.)	4
3	01-100V21-0065A	Tape - Fiberglass (1/8 x 1) (With Adhesive) (Sold Per Foot)	AR
4	01-1P2429-00003	Kit - Thermometer Holder Panel - Outer Wall Split	1
5	01-1M7049-00002	Ceiling Assy. - False (LH)	1
6	01-1M7049-00004	Ceiling Assy. - False (RH)	1
7	01-1M2335-00001	Wheel (For Installation)	1
8	01-100V17-00766	Plug - 1/2 NPT	1
9	01-1000V7-00053	Lamp - Oven (Complete) (Lens, Base, & Bulb) (Incls. Items 10, 11, and 18)	5
10	01-1000V7-00054	Bulb - Halogen G9 Base	AR
11	01-1000V7-0027L	Lens - Glass	AR
12	01-1000V4-00058	Mach. Screw 5/16-18 x 3/4 Hex Washer Hd., Gimlet Pt. (SST)	AR
13	01-1M7105-00201	Trim - Floor Assy. (RH) (Use With Item 46)	1
14	01-1M7105-00202	Trim Assy. - Floor (Rear) (Use With Item 46)	1
15	01-1M7105-00203	Trim - Rear Floor (Left Rear) (Use With Item 46)	1
16	01-1M7105-00204	Trim - Front Floor (Left Front) (Use With Item 46)	1
17	01-1M7090-00202	Retainer - Gasket (Loading Door)	2
18	01-1000V7-0027G	Gasket	AR
19	01-1M5610-00201	Shim - Jamb Plate	AR
20	01-1M7031-00002	Header - Loading Door (Top)	1
21	01-1M6116-00002	Ramp Lock - Weldment	2
22	01-100V16-0789B	Gasket - Loading Door (Horizontal) (45.31 In.)	1
23	01-100V16-0789A	Gasket - Loading Door (Vertical) (75.25 In.)	2
24	01-1M7090-00201	Retainer - Gasket (Horizontal)	1
25	01-1000V4-00073	Anchor - Drop-In 1/4-20	1
26	01-1000V4-0073A	Tool - Setting (1/4 In.)	1
27	01-1M7102-00002	Skin - Floor (LH)	1
28	01-1M7047-00201	Threshold Weldment	1
29	01-1000V4-00221	Mach. Screw 1/4-20 x 1/2 Phil. Flat Hd. (SST)	AR
30	01-1000V4-00222	Mach. Screw 1/4-20 x 3/4 Phil. Flat Hd. (SST)	AR
31	01-1000V4-00223	Mach. Screw 1/4-20 x 1 Phil. Flat Hd. (SST)	AR
32	01-1M7101-00002	Skin - Floor (RH)	1
33	01-100V17-00183	Coupler 1/2 In. (SST)	1
34	01-100V17-00533	Pipe 6-1/2 x 1/2 (SST)	1
35	01-100V17-00650	Pipe 3/4 x 2-1/2 NPT (Non-Rear Drain)	1
36	01-100V17-00732	Pipe 48-1/2 In	1
37	01-100V17-00516	Elbow - Street 3/4 x 90 Deg. (Rear Drain)	1
38	01-100V17-00517	Fitting 3/4 (Rear Drain)	1
39	01-100V17-00518	Tube 3/4 x 60 In. (Copper) (Rear Drain)	1
40	01-1M2566-00001	Duct - Side (Rear)	1
41	01-1M2089-00001	Duct - Bottom Vent (Front)	1
42	01-1M7104-00002	Kit - Floor (With Install Hardware) (Incls. Items 13 Thru 16, 27, & 32)	1
43	01-1000V4-00426	Screw #10-16 x 3/4 Hex Hd. (Drill Tip) (SST)	AR
44	01-1000V4-00498	Mach. Screw Pan Hd. 1/4-20 x 3/4, Nylock	AR
45	01-1M7340-00002	Kit - Insulation, Oven (Split Bag)	1
46	01-100V21-0065A	Tape - Fiberglass (1/8 x 1)	AR

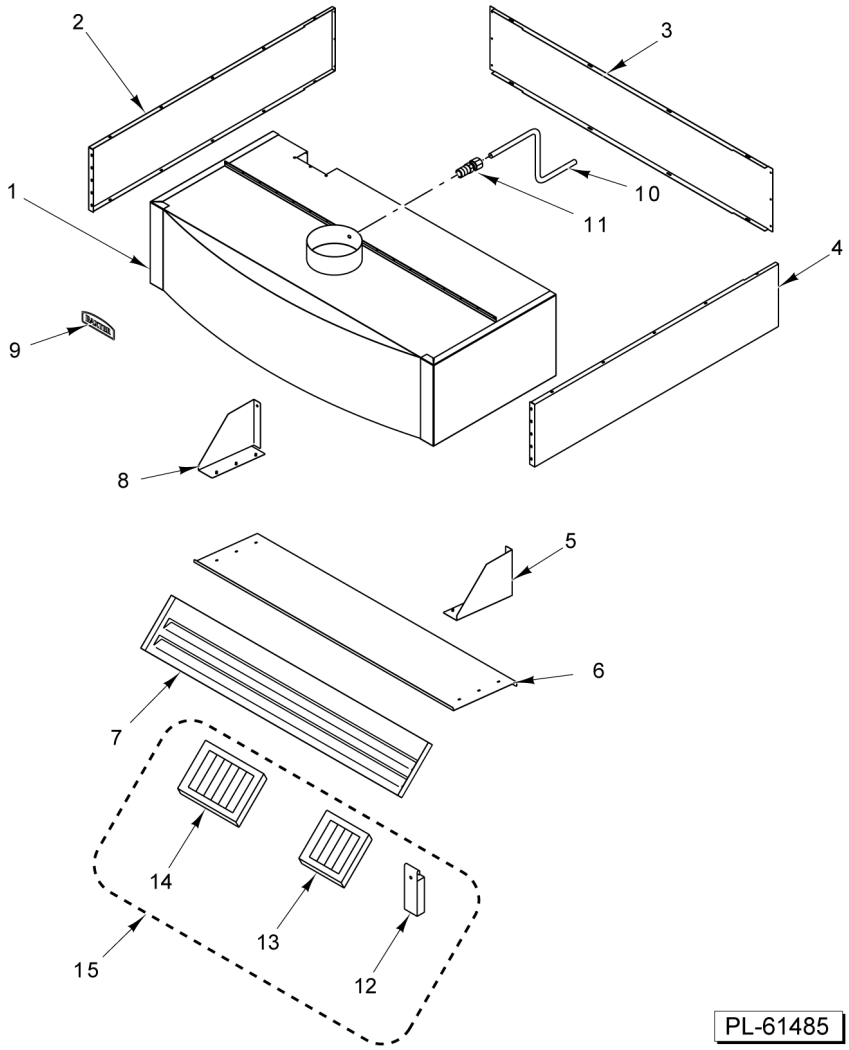

HOOD

HOOD

ILLUS. PL-61485	PART NO.	NAME OF PART	AMT.
1	01-1M7121-00004	Hood - Crated Assembly (Curved 30 In.)	1
2	01-1M6115-00201	Trim - Side	1
3	01-1M6115-00202	Trim - Rear	1
4	01-1M6115-00201	Trim - Side	1
5	01-1M7125-00001	Bracket - Plenum (Left)	1
6	01-1M7124-00002	Plenum - Hood	1
7	01-1M7123-00002	Baffle - Hood	1
8	01-1M7125-00002	Bracket - Plenum (Right)	1
9	01-100V16-0772B	Nameplate - Baxter Curved (9 In.)	1
10	01-100V17-00004	Tube 1/4 O.D. x 100 In. Lg. (Alum.) (Sold Per Inch)	AR
11	FP-078-49	Fitting - Tube (1/4 In.) (Brass)	1
12	01-1M3032-00001	Cup - Hood Grease	1
13	01-100V18-00089	Filter - Hood (16 x 20 W/Drop)	1
14	01-100V18-00088	Filter - Hood (16 x 16 W/Drop)	3
15	01-1M5931-00002	Kit - Grease Filter (Incls. Items 12, 13, & 14)	1

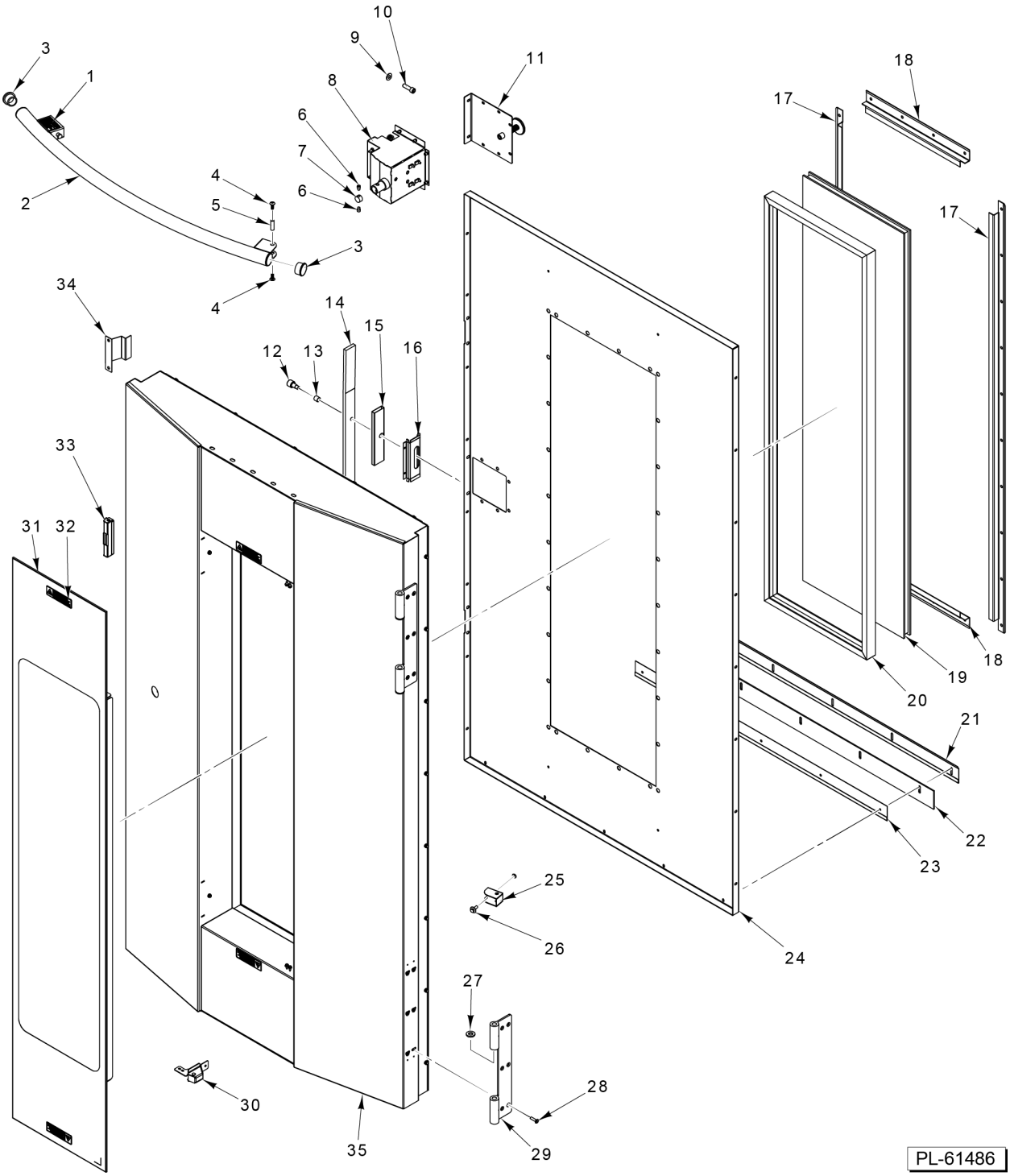

LOADING DOOR

LOADING DOOR

ILLUS. PL-61486	PART NO.	NAME OF PART	AMT.
1	01-100V16-00259	Label - Warning	2
2	01-1M7081-00002	Handle - Loading Door (Incls. Items 1 & 3)	1
3	00-913135-00228	Plug - Snap In (Round)	2
4	01-1000V4-00432	Mach. Screw 1/4-20 x 3/4 Phil. Pan Hd	AR
5	01-1M6101-00115	Pin - Handle Hinge (Curved)	1
6	01-1000V4-00369	Cap Screw 1/4 x 1/4 Hex Socket Hd. (Zinc-Plated)	2
7	01-1M6101-00102	Plug - Handle Mount	1
8	01-1M7095-00001	Latch Assy. (Mechanism)	1
9	01-1000V4-00364	Washer 0.375 x 0.812 x 1/6	1
10	01-1000V4-00531	Screw 3/8 x 1-1/4 (SST)	1
11	01-1M7343-00005	Handle - Interior Door	1
12	01-1000V0-00135	Bearing - Door Latch Roller	2
13	01-1M7093-00103	Sleeve - Roller	1
14	01-1M7099-00001	Bar - Lock	1
15	01-1M6101-00210	Bearing - Lock Bar	2
16	01-1M6101-00109	Lock - Retainer Bar	1
17	01-1M6105-00001	Retainer - Window Vertical	2
18	01-1M6106-00002	Retainer - Window Horizontal	2
19	01-100V16-00765	Glass - Double Pane	1
20	01-100V16-00766	Gasket - Window (One-Piece Fused Corners) (Outer Door)	1
21	01-1M6101-00203	Sweep - Outer Door	1
22	01-100V16-0779B	Gasket - Door Sweep	1
23	01-1M6101-00202	Sweep - Inner Door	1
24	01-1M7093-00201	Skin - Inner Door	1
25	01-1M7093-00202	Bracket - Handle Pivot	1
26	01-1000V4-00283	Mach. Screw 1/4-20 x 3/4 Hex Washer Hd. (SST)	2
27	01-1000V0-00080	Bearing - Door Hinge (Brass)	4
28	01-1000V4-00499	Mach. Screw 1/4-20 x 1" Phillips Flt Hd (W/Patch) (SST)	AR
29	01-1M5918-00301	Hinge - Door (Female)	2
30	01-1M7434-00002	Hinge Assy. (Outer Door)	2
31	01-1M6946-00002	Kit - Outer Door Glass Assy. (Incls. Item 32)	1
32	01-100V16-0168C	Label - Caution	4
33	01-1M7433-00002	Magnet	2
34	01-1M6526-00001	Bracket - Actuator, Door Switch	1
35	01-1M6199-00004	Door Assy. (Crated)	1

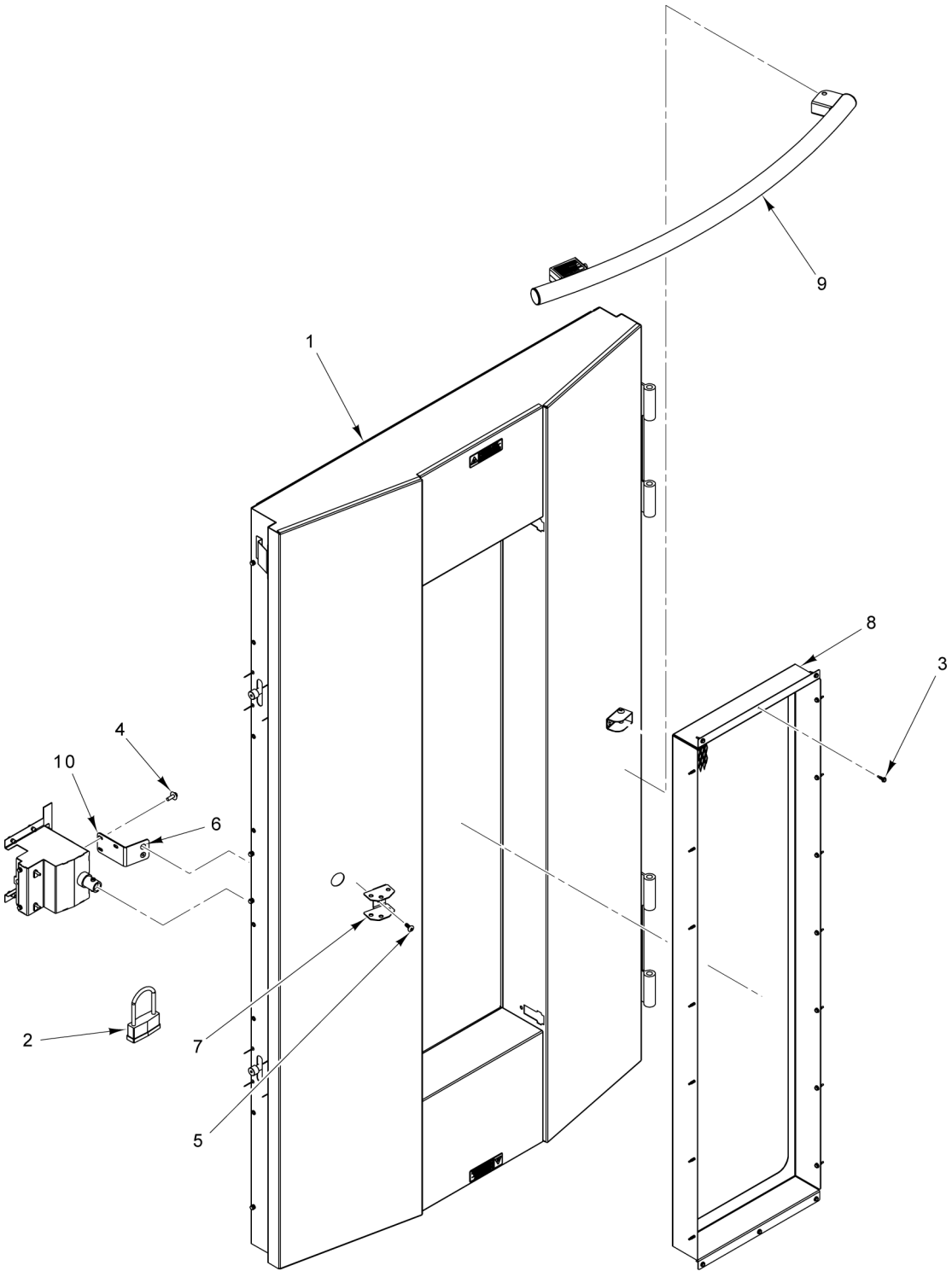

PL-61617

LOADING DOOR (SECURITY)

LOADING DOOR (SECURITY)

ILLUS. PL-61617	PART NO.	NAME OF PART	AMT.
1	01-1M6199-00006	Kit - Double Door (Security) (Incls Items 3 thru 10)	1
2	01-100V18-00081	Padlock (Long-Wide Shackle) (Incls. 2 Keys) NLA - 10/24/2023	1
3	01-1000V4-00426	Screw #10-16 x 3/4 Hex Hd. (Drill Tip) (SST)	20
4	01-1000V4-00283	Mach. Screw 1/4-20 x 3/4 Hex Washer Hd. (SST)	3
5	01-1000V4-00432	Mach. Screw 1/4-20 x 3/4 Phil. Pan Hd	2
6	01-1000V4-00122	Insert - Threaded 1/4-20	5
7	01-1M7456-00001	Bracket - Latch (Security)	1
8	01-1M7457-00002	Guard - Weldment (Security)	1
9	01-1M7477-00002	Handle - Loading Door (Security)	1
10	01-1M7478-00001	Backer Assy. - Door Latch (Security)	1

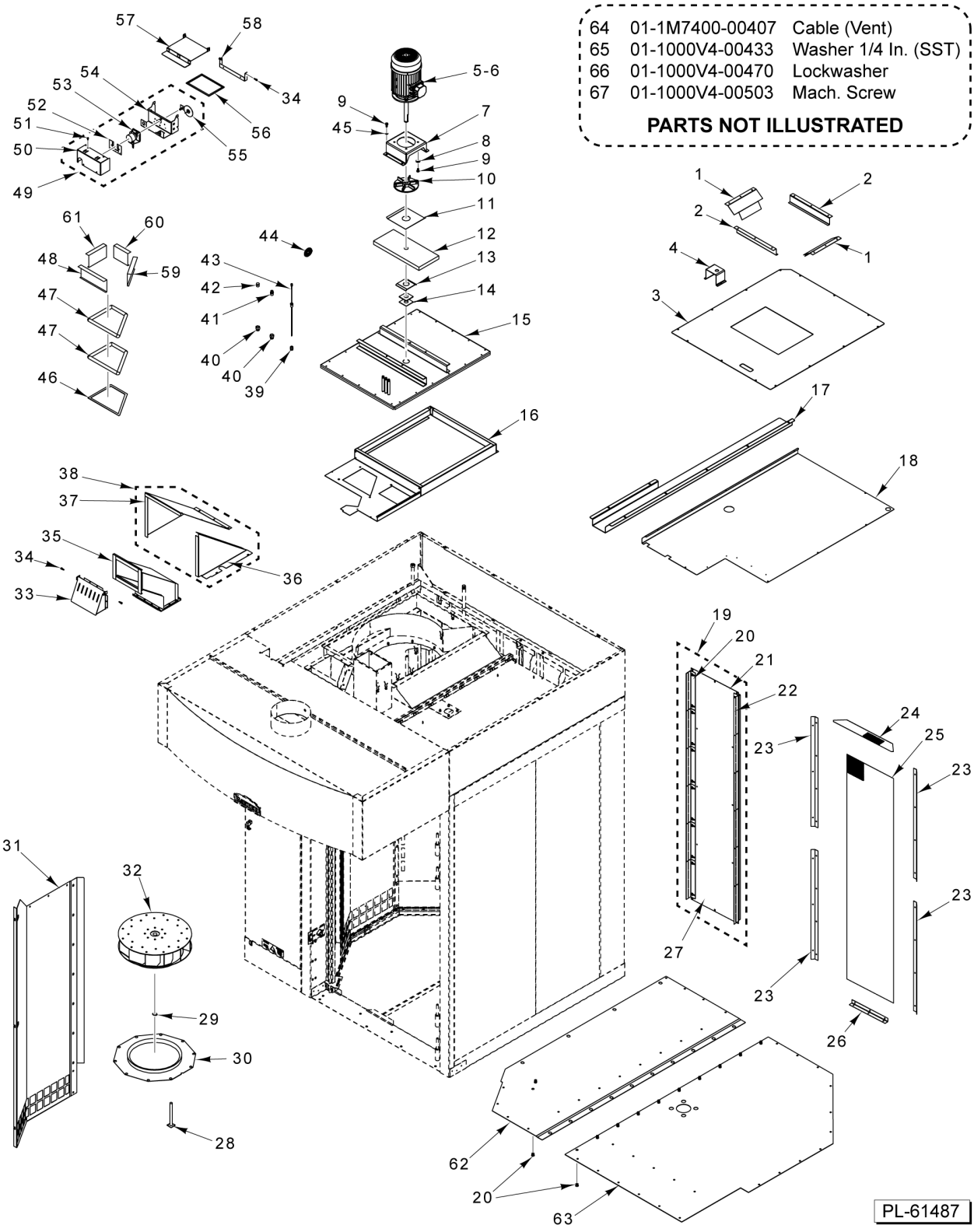

BLOWER, PANELS, AND VENTS

BLOWER, PANELS, AND VENTS

ILLUS. PL-61487	PART NO.	NAME OF PART	AMT.
1	01-1M1895-00001	Cover - Blower Insulation	2
2	01-1M2227-00001	Liner - Blower Insulation Cover	2
3	01-1M6955-00205	Cover - Blower Insulation	1
4	01-1M1433-00001	Protector - Thermocouple	1
5	01-1000V8-00052	Motor - Blower (3 Ph., 1-1/2 Hp.)	1
6	01-1000V8-00067	Motor - Blower (1 Ph., 2 Hp.)	1
7	01-1M1360-00001	Mount - Blower Motor	1
8	01-1000V4-00438	Washer 3/8	4
9	01-1000V4-00437	Screw 3/4-16 x 3/4	8
10	01-1M2458-00001	Heat Slinger Assy	1
11	01-1M1794-00001	Cover - Blower Insulation	1
12	01-1M1795-00001	Insulation - Blower	1
13	01-1M1359-00001	Seal - Retainer	1
14	01-1M1361-00001	Seal - Retainer	2
15	01-1M7058-00002	Weldment - Blower Mount	1
16	01-1M7059-00002	Body - Insulation Blower Cover	1
17	01-1M7060-00202	Ceiling Skin - Channel Access	1
18	01-1M7060-00201	Ceiling Skin - Body (RH)	1
19	01-1M5177-00001	Pressure Panel Assy	1
20	01-1000V4-00122	Insert - Threaded 1/4-20 (Incls. Items 21, 22, 27, & 65 thru 67)	AR
21	01-1M2096-00002	Body - Pressure Panel Shutter Support	1
22	01-1M5459-00002	Shutter - Pressure Panel 97 Deg	6
23	01-1M5686-00206	Retainer - Pressure Panel	4
24	01-1M5686-00207	Retainer - Pressure Panel Top	1
25	01-1M2572-00001	Screen - Pressure Panel	1
26	01-1M5686-00205	Retainer - Pressure Panel	1
27	01-1M5459-00001	Shutter - Pressure Panel 90 Deg	6
28	01-1M6774-00001	Tube - Weldment Highlimit	1
29	01-1000V1-00028	Ring - Snap	1
30	01-1M7056-00002	Bell - Inlet	1
31	01-1M7051-00002	Panel - Suction	1
32	01-1000V8-00058	Wheel - Blower (18 In. Dia.)	1
33	01-1M5624-00001	Over Pressure Vent Assy	1
34	01-1000V4-00572	Shoulder Screw, #10-32 X 3/8 Thread Length, .25 DIA X 3/8 Shoulder Length	4
35	01-1M7066-00002	Duct - Vent	1
36	01-1M6814-00101	Cover - Duct (Side)	1
37	01-1M6814-00102	Cover - Duct (Top)	1
38	01-1M6814-00001	Duct Assy	1
39	01-100V17-00257	Coupling 1/4 NPT (Brass)	1
40	01-100V17-00281	Coupler - Reducer 3/8 to 1/4	2
41	01-100V17-00304	Kit - Stuffing Box	1
42	01-100V17-00259	Plug - Pipe 3/8 NPT (Brass)	1
43	01-100V10-00307	Sensor - Temp (9 In.)	1
44	01-100V10-00361	Extender - Cable	1
45	01-1000V4-00439	Lockwasher 3/8 Internal	4
46	01-1M5982-00204	Collector (Top Gap Filler)	1
47	01-100V21-00072	Rope - Glass (3/4 Dia.)	AR
48	01-1M5015-00001	Retainer - Exhaust Stack Packing, Front	1
49	01-1M7409-00001	Vent Motor Assy. (Incls. Items 50 thru 55)	1
50	01-1M7409-00102	Cover - Vent	1
51	01-1000V4-00474	Screw 10-32 x 1/2 Hex Washer Hd. (Zinc)	AR
52	01-1M7409-00103	Retainer - Vent	1
53	01-1000V8-00150	Motor - Vent Damper	1
54	01-1M7409-00101	Mount - Vent Bracket	1
55	01-1M7410-00001	Vent Cam Assy	1

BLOWER, PANELS, AND VENTS

ILLUS. PL-61487	PART NO.	NAME OF PART	AMT.
56	01-100V16-00682	Gasket - Vent Duct (Sold per Inch)	1
57	01-1M6549-00001	Vent - Intake Lid	1
58	01-1M6550-00101	Bracket - Vent Lid	1
59	01-1M5015-00002	Retainer - Exhaust Stack Packing (Right)	1
60	01-1M5015-00003	Retainer - Exhaust Stack Packing (Rear)	1
61	01-1M5015-00004	Retainer - Exhaust Stack Packing (Left)	1
62	01-1M7049-00002	Ceiling Assy. - False (LH) (Incls. Item 20)	1
63	01-1M7049-00004	Ceiling Assy. - False (RH) (Incls. Item 20)	1
64	01-1M7400-00407	Cable (Vent)	1
65	01-1000V4-00433	Washer 1/4 In. (SST)	AR
66	01-1000V4-00470	Lockwasher 1/4 In. (SST)	AR
67	01-1000V4-00503	Mach. Screw 1/4-20 x 1/2 In. (SST)	AR

NOTES

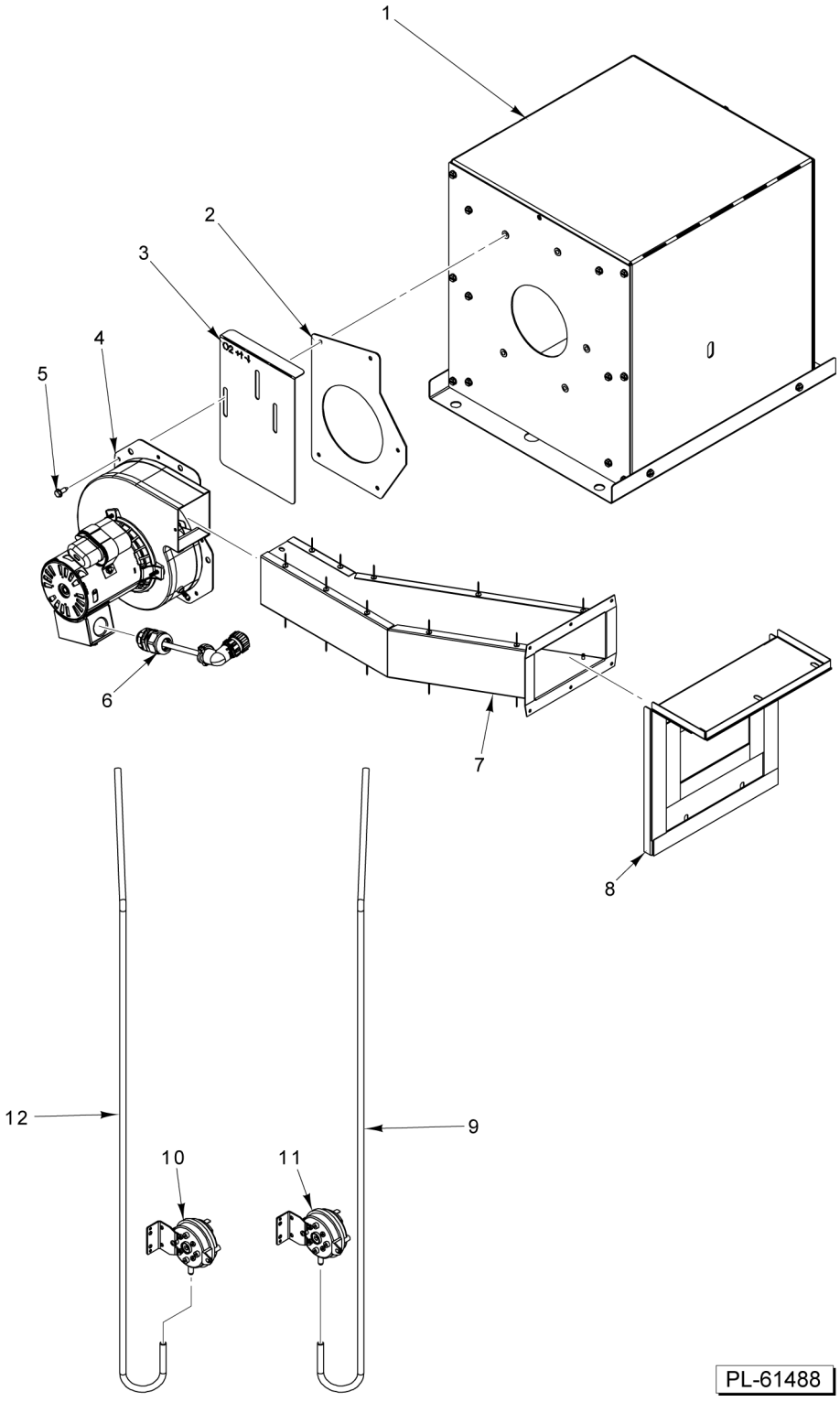

DRAFT INDUCER

DRAFT INDUCER

ILLUS. PL-61488	PART NO.	NAME OF PART	AMT.
1	01-1M7427-00002	Draft Inducer Assy	1
2	01-100V16-00956	Gasket - Insulation (Draft Inducer)	1
3	01-1M6555-00108	Plate - Adjustment	1
4	01-1000V8-00156	Blower Motor - Draft Inducer (Incls. Item 2)	1
5	01-1000V4-00389	Screw #10-32 x 5/8 Hex Hd. W/ Lock Washer (SST)	AR
6	01-1M7400-00412	Cable (Draft Inducer)	1
7	01-1M6763-00002	Duct	1
8	01-1M6764-00001	Connection - Hood	1
9	01-1M7223-00002	Tube - Pressure Switch (Hood)	1
10	01-1000V6-00344	Switch - Pressure (Draft Inducer)	1
11	01-1000V6-00387	Switch - Pressure (Hood)	1
12	01-1M6597-00001	Tube - Pressure Switch (Draft Inducer)	1

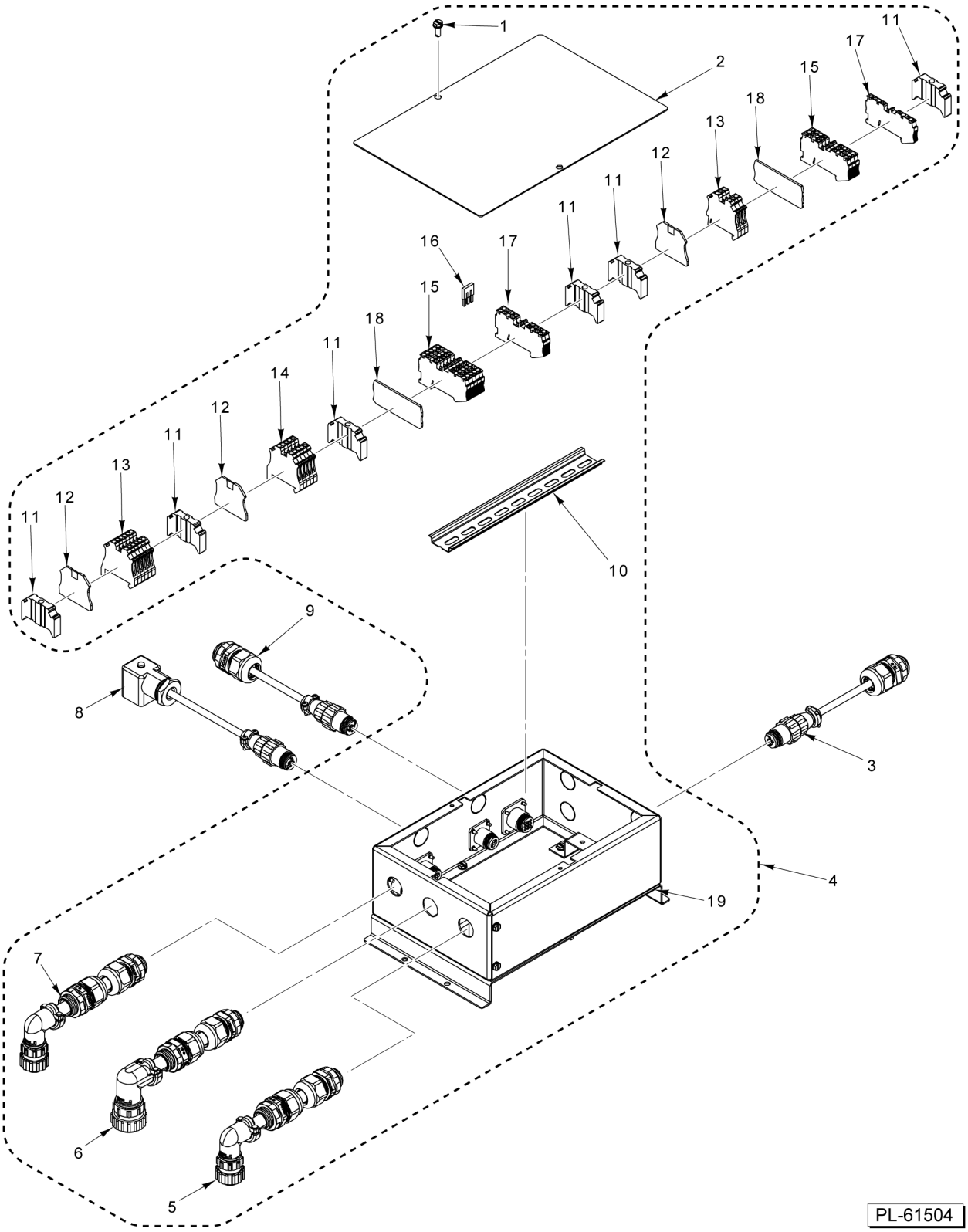

JUNCTION BOX ASSEMBLY

JUNCTION BOX ASSEMBLY

ILLUS. PL-61504	PART NO.	NAME OF PART	AMT.
1	01-1000V4-00474	Screw 10-32 x 1/2 Hex Washer Hd. (Zinc)	AR
2	01-1M7400-00403	Cover - Service Entrance	1
3	01-1M7400-00410	Cable (Lifter)	1
4	01-1M7400-00004	Junction Box Assy. (Incls. Items 1, 2, 4 thru 7, & 10 thru 19)	1
5	01-1M7400-00404	Cable (Main, 3 Phase)	1
6	01-1M7400-00405	Cable (Main)	1
7	01-1M7400-00406	Cable (Main, Single Phase)	1
8	01-1M7400-00408	Cable (Solenoid)	1
9	01-1M7400-00409	Cable (Blower)	1
10	01-100V18-00115	Din Rail (9080-M H) (9 In.)	1
11	01-1000V5-00396	Stop - End (Din Rail) (35mm)	6
12	01-1000V5-00404	Block - Spring Terminal (End Cap) (2 Wire)	3
13	01-1000V5-00402	Block - Spring Terminal (2 Wire Gray)	9
14	01-1000V5-00403	Block - Spring Terminal (2 Wire Blue)	5
15	01-1000V5-00397	Block - Spring Terminal (4 Wire Gray) (4 Wire/Gray)	8
16	01-1000V5-00401	Jumper (3-Pole)	1
17	01-1000V5-00399	Block - Spring Terminal (4 Wire Green/Yellow) (4 Wire/Ground)	3
18	01-1000V5-00400	Block - Spring Terminal (End Cap) (4 Wire) (4 Wire/Gray)	2
19	01-1M7400-00040	Junction Box Metal Assy	1

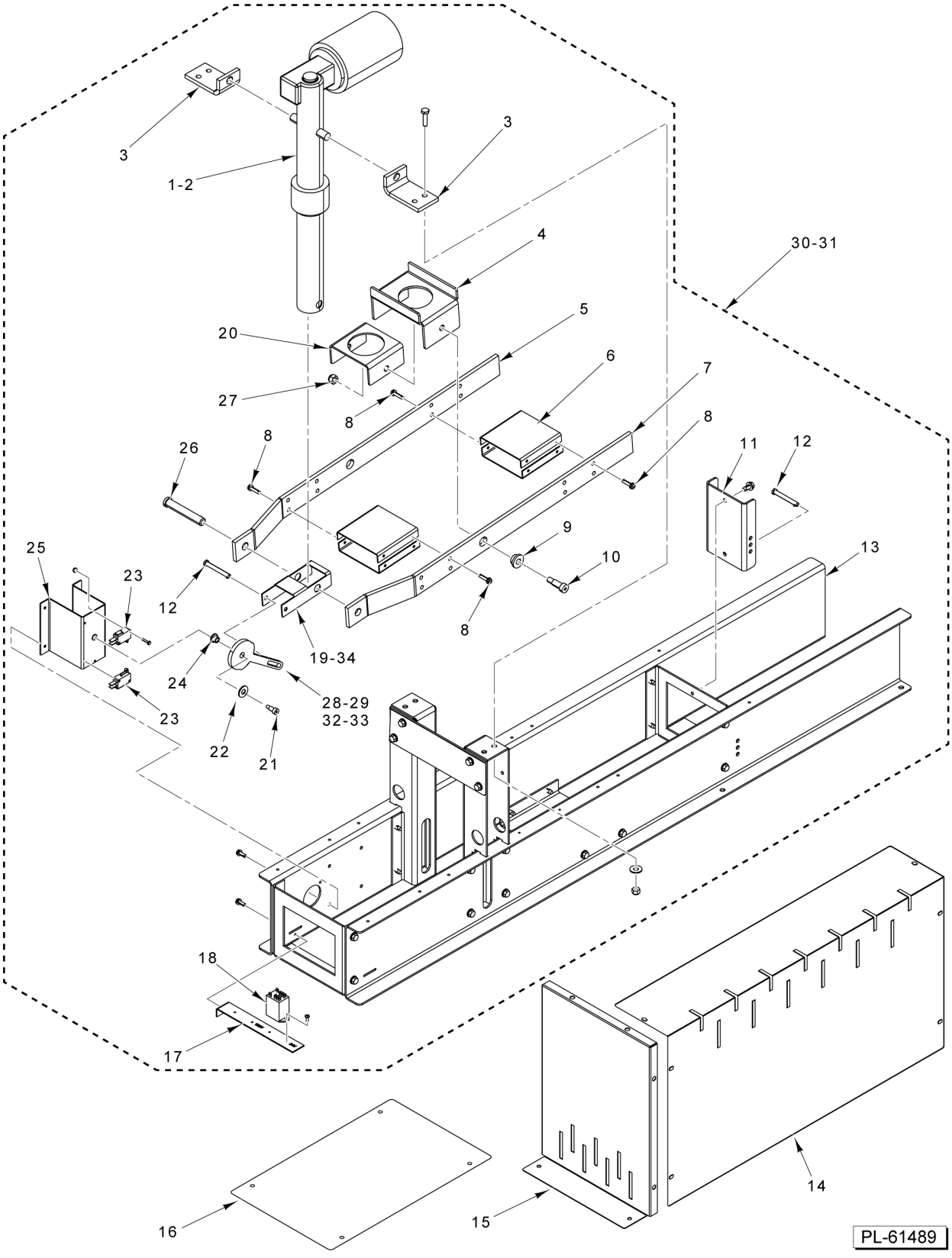
3
1-2
3
4
30-31
5
20
6
7
27
8
8
8
26
11
12
9
25
10
13
23
12
8
19-34
24
28-29
32-33
23
22
21
18
17
14
16
15
PL-61489

LIFTER

LIFTER

ILLUS. PL-61489	PART NO.	NAME OF PART	AMT.
1	01-1M7545-00001	Kit - Rack Lift Actuator (ML-132521 to ML-132578)	1
*2	01-1000V8-0158C	Capacitor - 30uF / 300Vac (Type 1 Heavy Duty)	1
3	01-1M6600-00202	Bracket - Mounting (Linear Actuator)	2
4	01-1M6601-00103	Support - Rotator	1
5	01-1M6601-00101	Arm - Lifting	1
6	01-1M6601-00102	Brace - Lifting Arm	4
7	01-1M6601-00101	Arm - Lifting	1
8	01-1000V4-00543	Screw Hex Hd. 10-32 x 3/4	AR
9	01-1000V0-00121	Bearing	2
10	01-1000V4-00379	Bolt - Shoulder	2
11	01-1M6600-00203	Bracket - Support	1
12	01-1000V1-00087	Pin - Clevis (1/4 x 2 In.)	3
13	01-1M6599-00002	Lifter Body Assy	1
14	01-1M6608-00002	Cover - Side	2
15	01-1M6608-00001	Cover - Front/Back	2
16	01-1M6608-00004	Cover - Front	1
17	01-1M6600-00104	Bracket - Relay	1
18	01-1000V6-00271	Relay - D.P.D.T. (1/2 Hp., 120 VAC)	2
19	01-1M6600-00204	Arm - Lift Switch Actuating (Before 03/01/23)	1
20	01-1M6601-00104	Support - Rotator	1
21	01-1000V4-00572	Shoulder Screw, #10-32 X 3/8 Thread Length, .25 DIA X 3/8 Shoulder Length	1
22	01-1000V4-00433	Washer 1/4 In. (SST)	1
23	01-1000V6-00343	Switch - Lever SPST	2
24	01-1000V0-00139	Bearing - Flanged Sleeve	1
25	01-1M6603-00001	Bracket Assy. - Switch	1
26	01-1000V1-00086	Pin - Clevis (1/2 x 3 In.)	1
27	01-1000V4-00380	Nut 5/16-18 NYLOCK	2
28	01-1M6600-00205	Cam - Lift Switch (Before 03/01/23)	1
29	01-1M6600-00605	Cam - Lift Switch (A Style Carrier) (V-Notch Up) (Before 03/01/23)	1
30	01-1M7551-00004	Rack Lift Assy. (B or C Type Lifter)	1
31	01-1M7551-00008	Rack Lift Assy. (A Type Lifter)	1
32	01-1M7551-00102	Cam - Lift Switch (Starting 3/1/23 or with 01-1M7551-00103 Actuator)	1
33	01-1M7551-00104	Cam - Lift Switch (Starting 3/1/23 or with 01-1M7551-00103 Actuator)	1
34	01-1M7551-00101	Bracket - Lift Actuator (Starting 3/1/23 or with 01-1M7551-00103 Actuator)	1

* For Use With 01-1000V8-00158 Actuator Only

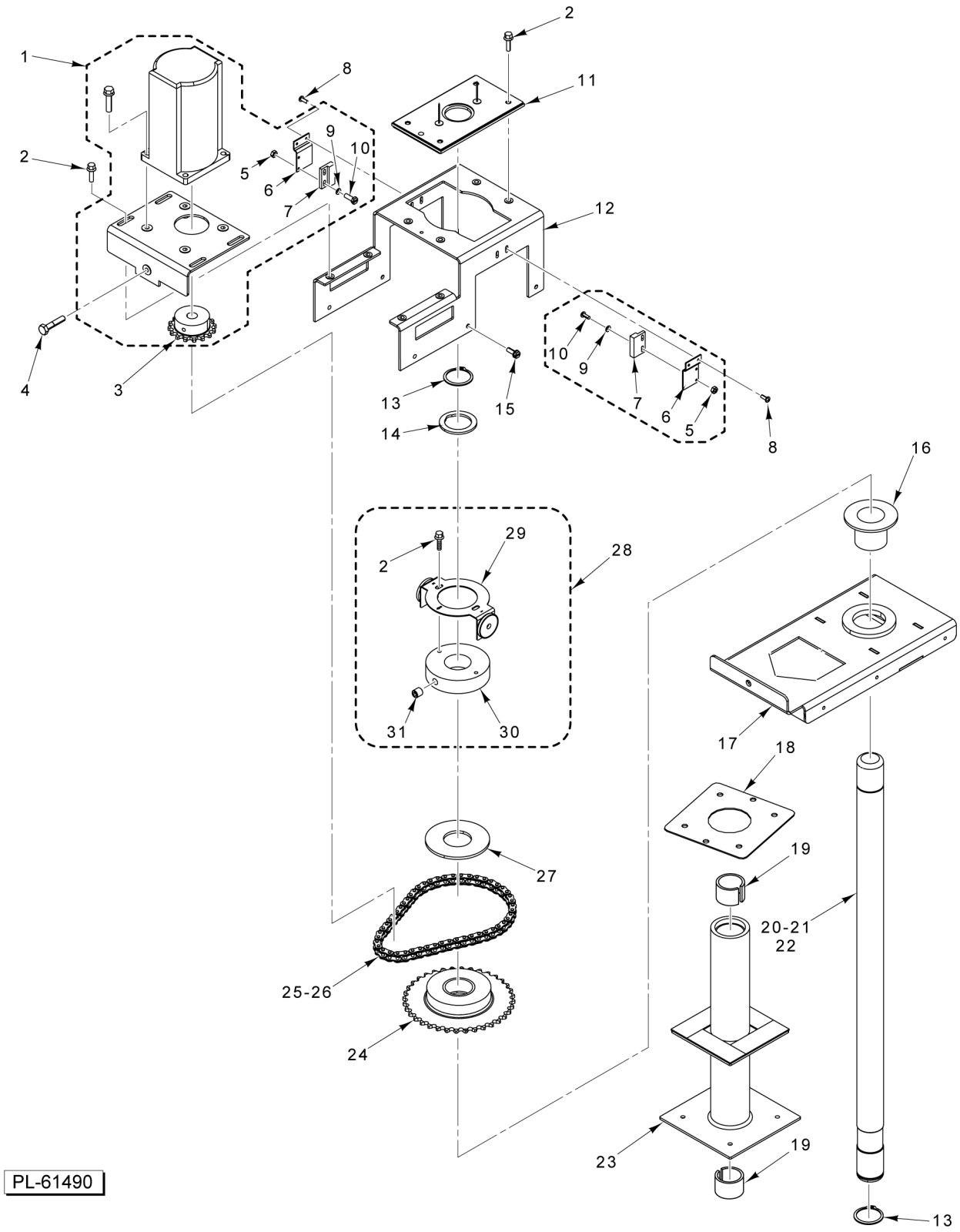
1
2
3
4
5
6
7
8
9
10
11
12
13
14
15
16
17
18
19
20-21
22
23
24
25-26
27
28
29
30
31
PL-61490

ROTATOR

ROTATOR

ILLUS. PL-61490	PART NO.	NAME OF PART	AMT.
1	01-1M7318-00001	Rotation Motor Assy. (Incls. Items 3, 5 thru 7, 9, & 10)	1
2	01-1000V4-00284	Screw 10-32 x 3/4 Hex Washer Hd., Serrated Flange (SST)	AR
3	01-1000V3-00114	Sprocket (17T)	1
4	01-1000V4-00539	Screw - Sheet Metal, Hex Hd. 1/4-20 x 1-1/4	1
5	01-1000V4-00586	Nut	4
6	01-1M6604-00106	Bracket - Rotate Switch	2
7	01-1M5777-00101	Switch (Magnetic)	2
8	01-1000V4-00515	Screw - Sheet Metal, Pan Hd. 6-32 x 3/8 (Zinc)	AR
9	01-1000V4-00585	Flat Washer	4
10	01-1000V4-00584	Screw	4
11	01-1M6606-00002	Shaft Alignment Assy	1
12	01-1M6604-00201	Bracket - Mounting	1
13	01-1000V1-00085	Snap Ring	2
14	01-1M6704-00001	Shim - Carrier (Height Adjustment)	1
15	01-1000V4-00385	Screw - Sheet Metal, Hex Hd. 10-16 x 3/4 (SST)	4
16	01-1000V0-00114	Bearing - Flange	1
17	01-1M6605-00001	Rotator - Lifter	1
18	01-1M6715-00001	Clamp - Rotator Housing	1
19	01-1M7464-00001	Kit - Bearing (Shaft Housing)	1
20	01-1M6773-00101	Shaft - Rotator (A Style)	1
21	01-1M6604-00105	Shaft - Rotator (B Style)	1
22	01-1M6604-00305	Shaft - Rotator (C Style)	1
23	01-1M6609-00001	Housing - Shaft	1
24	01-1M6610-00001	Sprocket - Rotator	1
25	01-1000V3-0087A	Chain - Roller 20-1/8 In	1
26	01-1000V3-00088	Link - Connecting	AR
27	01-1M6604-00104	Clutch - Slide	1
28	01-1M6629-00004	Magnet Switch Assy. (Two Magnets) (B & C Style)	1
29	01-1M6880-00004	Pointer Assy. (Two Magnets) (B & C Style)	1
30	01-1M6604-00103	Collar, Set - Rotator	1
31	01-1000V4-00161	Screw, Set - Allen (3/8-16)	1

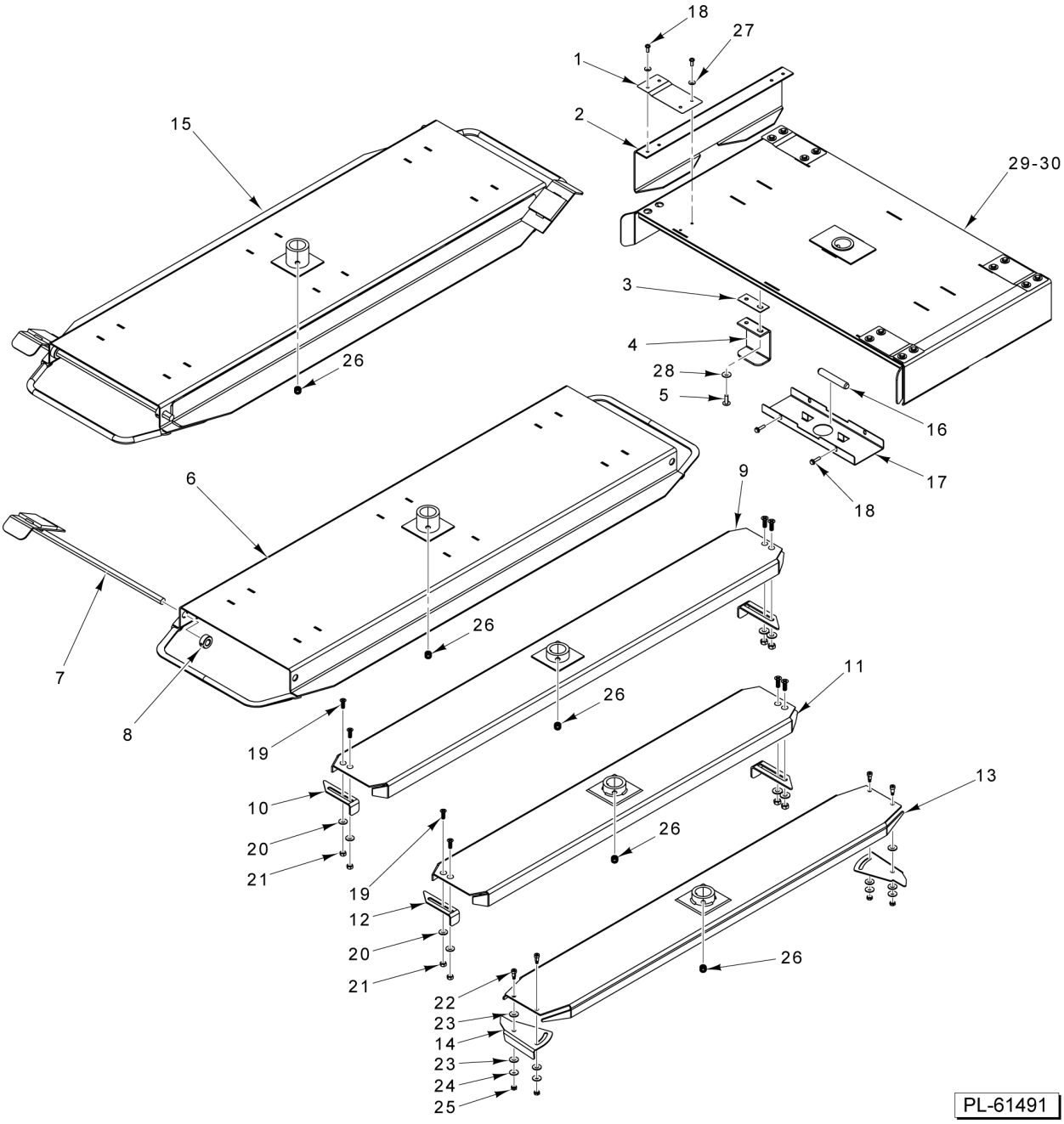
18
27
1
2
15
29-30
3
4
28
5
26
16
17
18
6
9
7
26
8
11
26
19
10
20
21
13
26
19
12
20
21
22
23
14
23
24
25
26
PL-61491

CARRIER

CARRIER

ILLUS. PL-61491	PART NO.	NAME OF PART	AMT.
1	01-1M5367-00001	Strap - Side Support	4
2	01-1M5368-00001	Channel - Side Hanger	2
3	01-1M5369-00002	Shim - Support	4
4	01-1M5366-00001	Channel - Support Hanger	2
5	01-1000V4-00534	Bolt 1/4-20 x 3/4 In. (SST) (Hex Cap)	4
6	01-1M6622-00002	Carrier (B Style) (Double Rack) (Incls. Items 7, 8, & 26) (15.60 In. Wide)	1
7	01-1M2580-00002	Stop - Rack Carrier (B Style Carrier)	2
8	01-1000V1-00013	Collar - Set 1/2 In. Dia	4
9	01-1M6770-00003	Carrier (C Style) (42-1/2 In. Stops) (Incls. Items 10, 19 thru 21, & 26)	1
10	01-1M4862-00101	Latch - Carrier	2
11	01-1M6770-00004	Carrier (C Style) (Double Rack) (33 In. Stops) (Incls. Items 12, 19 thru 21, & 26)	1
12	01-1M4862-00101	Latch - Carrier	2
13	01-1M6770-00007	Carrier (C Style) (Panera) (Incls. Item 14, & 22 thru 26)	1
14	01-1M4862-00701	Lock - Carrier (Double Models Only) (Panera Bread Only)	2
15	01-1M6622-00004	Carrier (B Style W/Welded Extensions) (16.875 In. Wide) (Incls. Item 7 thru 8, & 26)	1
16	01-1M6942-00001	Pin - Locking (A Style Lift 1.25 " Shaft)	1
17	01-1M6772-00101	Plate - Cover, Pin	1
18	01-1000V4-00284	Screw 10-32 x 3/4 Hex Washer Hd., Serrated Flange (SST)	AR
19	01-1000V4-00074	Mach. Screw 1/4-20 x 3/4 Phil. Flat Hd	4
20	01-1000V4-00433	Washer 1/4 In. (SST)	4
21	01-1000V4-00599	Nut 1/4 In. (SST) (Toplock - Vibration Resistant)	4
22	01-1000V4-00281	Screw, Shoulder #10-32, 1/4 x 3/8 In. (SST)	4
23	01-1000V4-00433	Washer 1/4 In. (SST)	4
24	01-1000V4-00434	Washer - Flat #10 (SST)	4
25	01-1000V4-00336	Nut #10-32 W/ Lockwasher (SST)	4
26	01-1000V4-00654	Screw - Set 3/8-24 x 3/8 (Knurled Tip) (Knurled Tip)	2
27	01-1000V4-00434	Washer - Flat #10 (SST)	AR
28	01-1000V4-00433	Washer 1/4 In. (SST)	4
29	01-1000V4-00121	Insert - Threaded 10-32 Hex	16
30	01-1M6772-00001	Carrier (A Style) (Double Rack) (Incls. Items 1 thru 5, 16 thru 18, 27 thru 29)	1

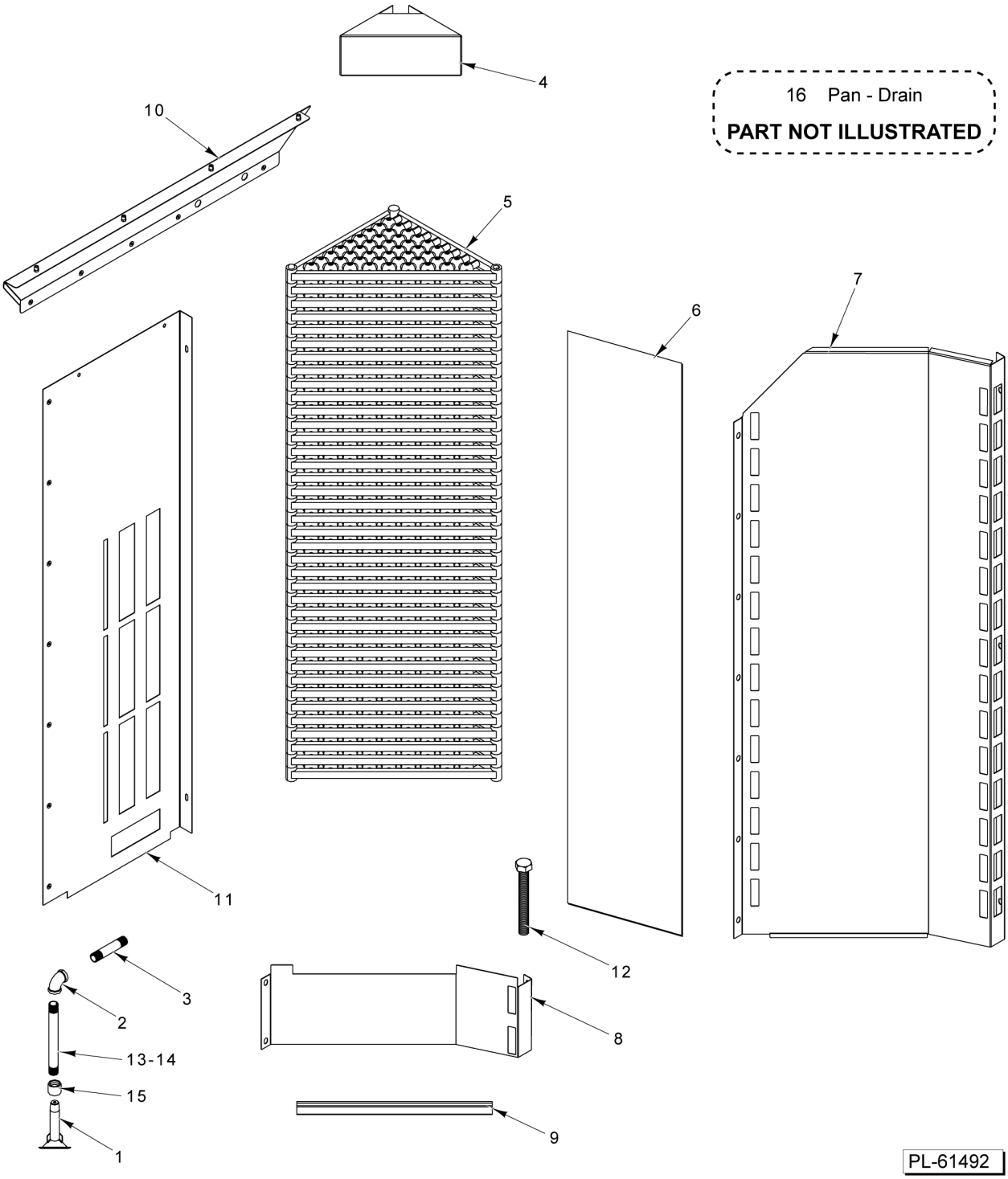

STEAMER ASSEMBLY

STEAMER ASSEMBLY

ILLUS. PL-61492	PART NO.	NAME OF PART	AMT.
1	01-1M7100-00001	Sprayer - Steam Manifold	1
2	01-100V17-00534	Pipe 1/2 x 3-1/2 (SST)	1
3	01-100V17-00432	Pipe 1/2 x 4 (SST)	1
4	01-1M7065-00001	Angle, Steamer Box	1
5	01-100V16-00529	Casting - Steamer	28
6	01-1M6325-00002	Sheet - Splash	1
7	01-1M7050-00201	Panel - Steamer Outer	1
8	01-1M7050-00202	Panel - Steamer Bottom	1
9	01-1M5065-00001	Bracket - Water Guide	7
10	01-1M7052-00002	Panel - Suction Top	1
11	01-1M7053-00002	Panel - Steamer (Rear)	1
12	01-1M2161-00001	Screw - Leveler	1
*13	01-100v17-00515	Pipe 1/2 x 13 In. (SST)	1
14	01-100V17-00850	Pipe - 1/2 x 15 In	1
15	01-100V17-00183	Coupler 1/2 In. (SST)	1
16	01-1M7106-00001	Pan - Drain	1

* On ovens produced before 05/19/23, measure existing pipe prior to ordering. If existing pipe does not place the head of the Manifold inside of the Steamer Box, order item #16.

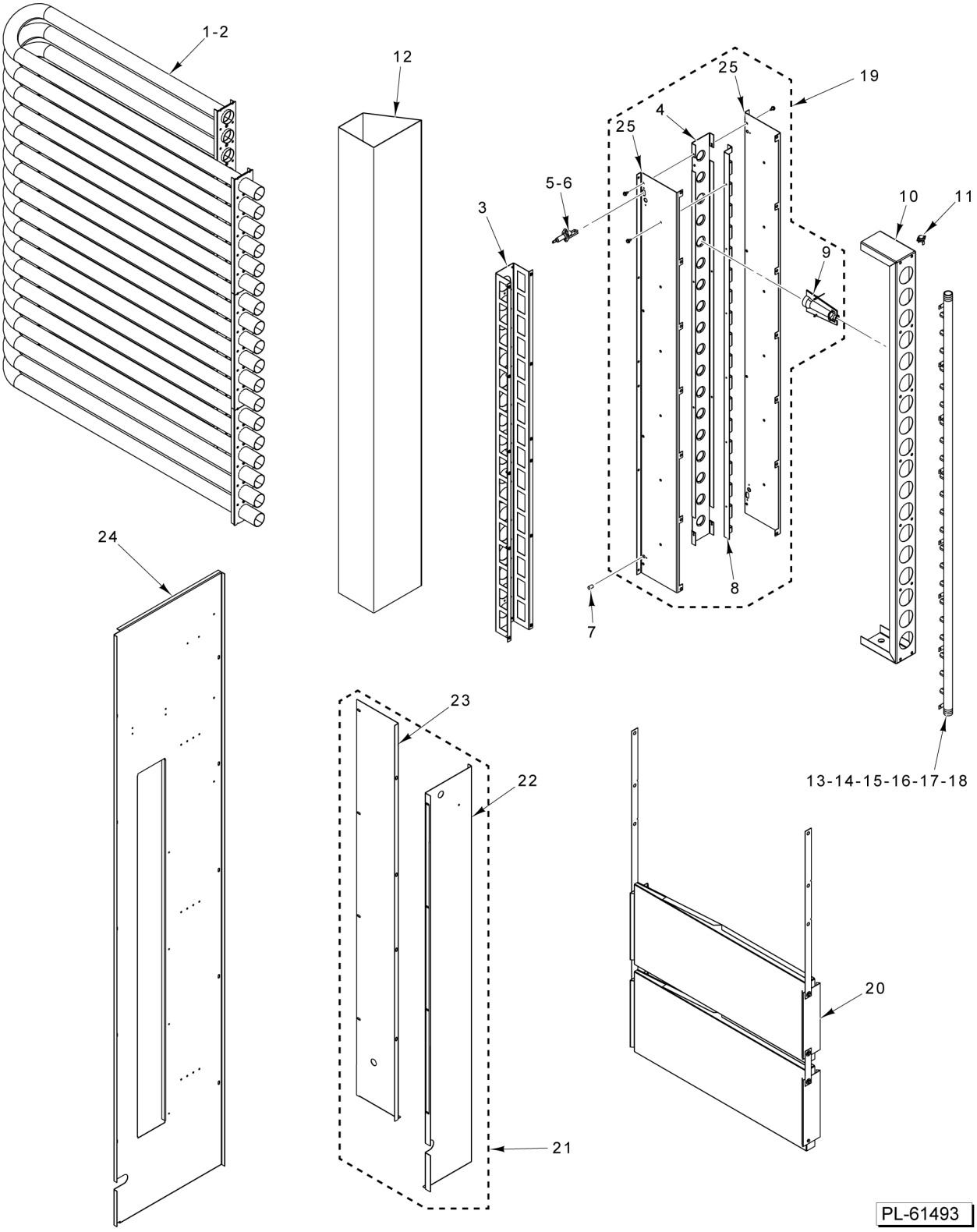

GAS BURNER AND HEAT CIRCULATION

GAS BURNER AND HEAT CIRCULATION

ILLUS. PL-61493	PART NO.	NAME OF PART	AMT.
1	01-1M7109-00002	Tube Assy. (6-Dimpled Tube)	3
2	01-100V16-00530	Gasket - Heat Exchanger (6-Hole)	6
3	01-1M6080-00001	Channel - Hat Burner Rack Assy	1
4	01-1M5467-00001	Plate - Firing (Burner Rack)	1
5	01-1000V9-00201	Ignitor - Burner Spark	1
6	01-100V10-00359	Cable - Supression, Spark Igniter (54 In.)	1
7	01-1000V9-00169	Rod - Flame Sensor	1
8	01-1M5465-00001	Mount - Burner	1
9	01-1000V9-00146	Burner - In-Shot (Crossover)	18
10	01-1M5401-00002	Enclosure - Burner Rack	1
11	01-1M6717-00001	Switch - Flame Rollout	1
12	01-1M7055-00002	Collector - Weldment	1
13	01-100V16-01030	Manifold Assy. - Gas Supply (NAT)	1
14	01-100V16-01031	Manifold Assy. - Gas Supply (LP)	1
15	01-1000V9-00171	Orifice #49 (0.073 In.) (NAT)	18
16	01-1000V9-00173	Orifice #56 (0.046 In.) (PRO)	18
17	01-1000V9-00185	Orifice (0.0635 In.) (NAT) (Above 6500 Ft.)	18
18	01-1000V9-00186	Orifice (0.040 In.) (PRO) (Above 6500 Ft.)	18
19	01-1M5463-00001	Box - Burner Assy. (Incls. Items 4, 8, 9, & 25)	1
20	01-1M6591-00002	Baffle - Center Assy	1
21	01-1M7412-00002	Burner Cover Assy. (Incls. Items 22 & 23)	1
22	01-1M7412-00201	Cover - Burner (Front)	1
23	01-1M7412-00202	Cover - Burner (Side)	1
24	01-1M7048-00201	Cabinet - Skin Control	1
25	01-1M5464-00001	Plate - Side (Burner Rack)	2

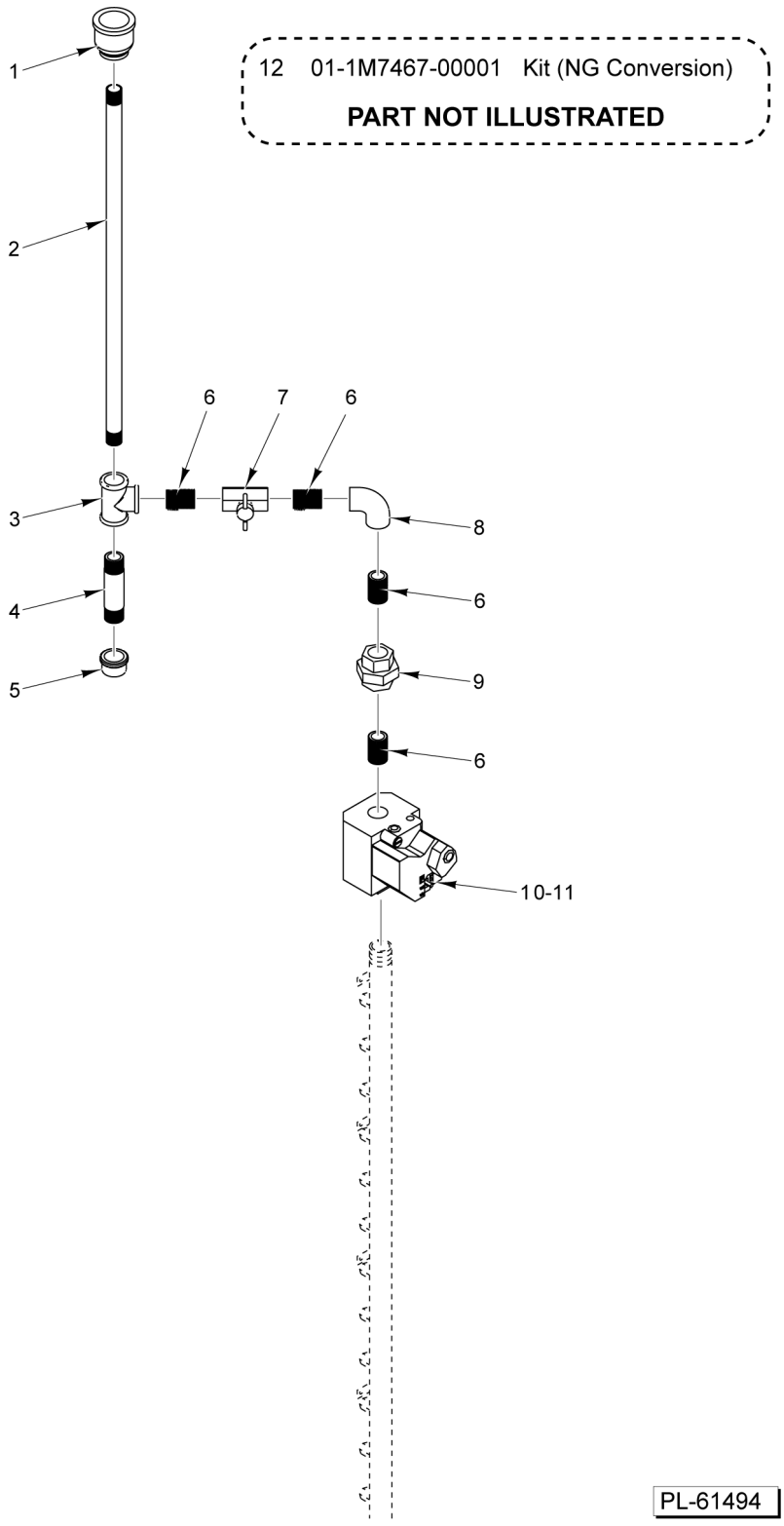

GAS SUPPLY PLUMBING

GAS SUPPLY PLUMBING

ILLUS. PL-61494	PART NO.	NAME OF PART	AMT.
1	01-100V17-00577	Bell - Reducer	1
2	01-100V17-00576	Pipe (3/4 In. x 23 In.)	1
3	01-100V17-00451	Tee 3/4 NPT x 3/4 NPT	1
4	01-100V17-00575	Pipe (3/4 In. x 4 In.)	1
5	01-100V17-00472	Cap - Pipe 3/4	1
6	FP-036-92	Pipe 3/4 x 1-3/8 TBE (Black)	4
7	01-100V17-00169	Valve - Shut Off, Gas 3/4 NPT	1
8	01-100V17-00513	Elbow - Pipe 90 Deg. x 3/4 NPT (Black)	1
9	01-100V17-00470	Union 3/4 NPT BLK #150	1
*10	01-1000V9-00160	Valve - Gas (Gas Valve Only) (3/4 In.) (NAT)	1
11	01-1000V9-00128	Valve Kit - LP Conversion	1
12	01-1M7467-00001	Valve Kit - NAT Conversion (Use with 01-1000V6-00211)	1

* Use With Item 11 for LP

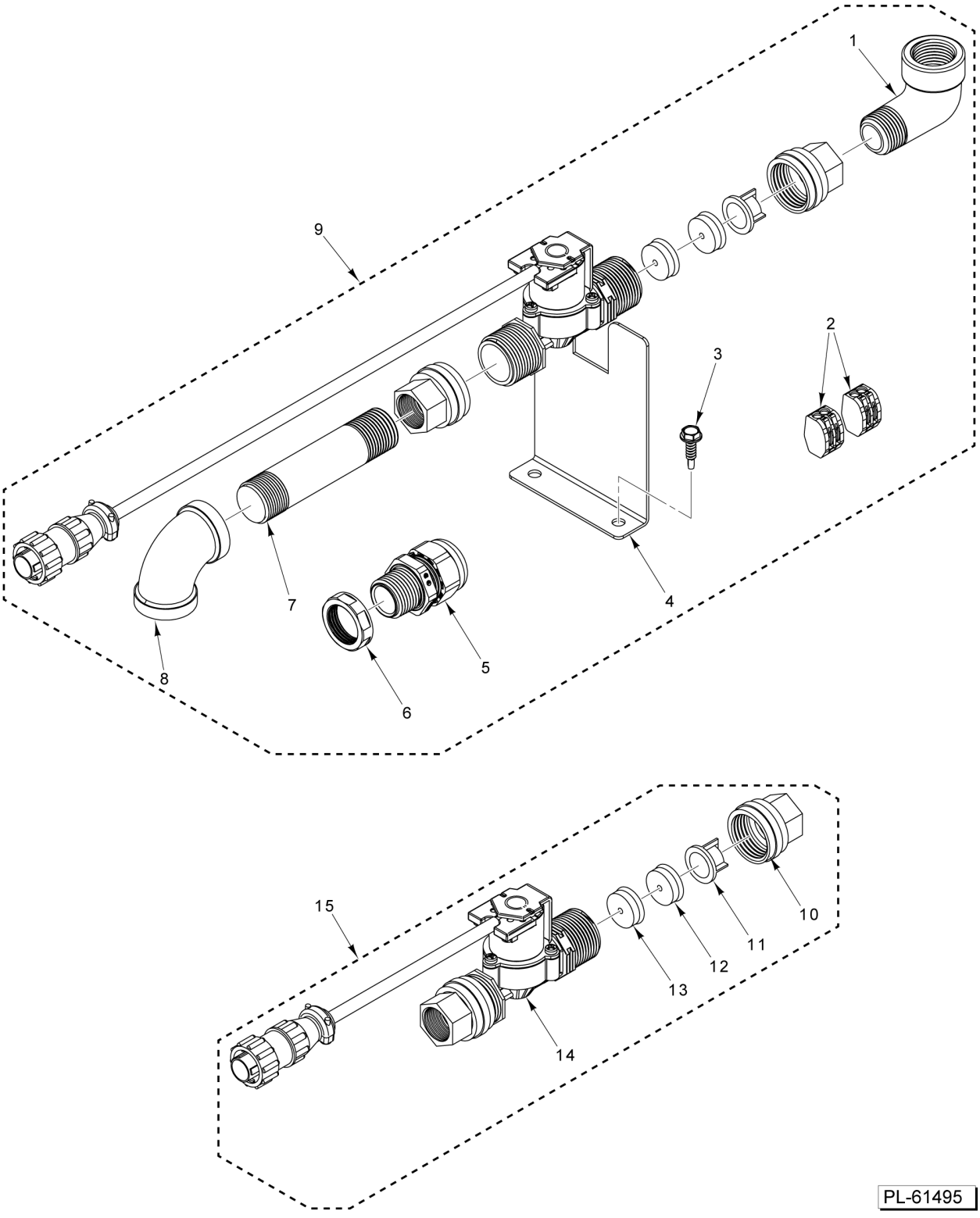

EXTERIOR WATER SUPPLY

EXTERIOR WATER SUPPLY

ILLUS. PL-61495	PART NO.	NAME OF PART	AMT.
1	01-100V17-00538	Elbow 1/2 Street (SST)	1
2	01-1000V5-00362	Block - Terminal (2 Teminals) (W/ Operating Levers)	2
3	01-1000V4-00426	Screw #10-16 x 3/4 Hex Hd. (Drill Tip) (SST)	2
4	01-1M7495-00101	Bracket - Support	1
5	01-100V11-00248	Strain Relief	1
6	01-100V11-00249	Nut - Strain Relief	1
7	01-100V17-00736	Pipe 3-1/2 x 1/2 In	1
8	01-100V17-00347	Elbow 1/2 In. x 90 Deg. (SST)	1
9	01-1M7495-00001	Kit - Steam Solenoid (Incls. Items 1 thru 8, & 15)	AR
10	01-100V17-00830	Adapter - Hose to Pipe 3/4 GHTF x 1/2 NPTF	1
*11	01-100V17-00838	Filter - Solenoid Valve (5 GPM Without Restrictor)	1
12	01-100V17-00840	Restrictor - Flow (White 3 GPM) (Double Rack Ovens)	1
13	01-100V17-00839	Restrictor - Flow (Brown 2 GPM) (Single Rack Ovens)	1
14	01-1M7493-00001	Solenoid Assy	1
15	01-1M7494-00001	Kit - Water Solenoid (Incls. Items 10 thru 14)	AR

* No Restrictor Used on Panera Bread Double Rack Ovens.