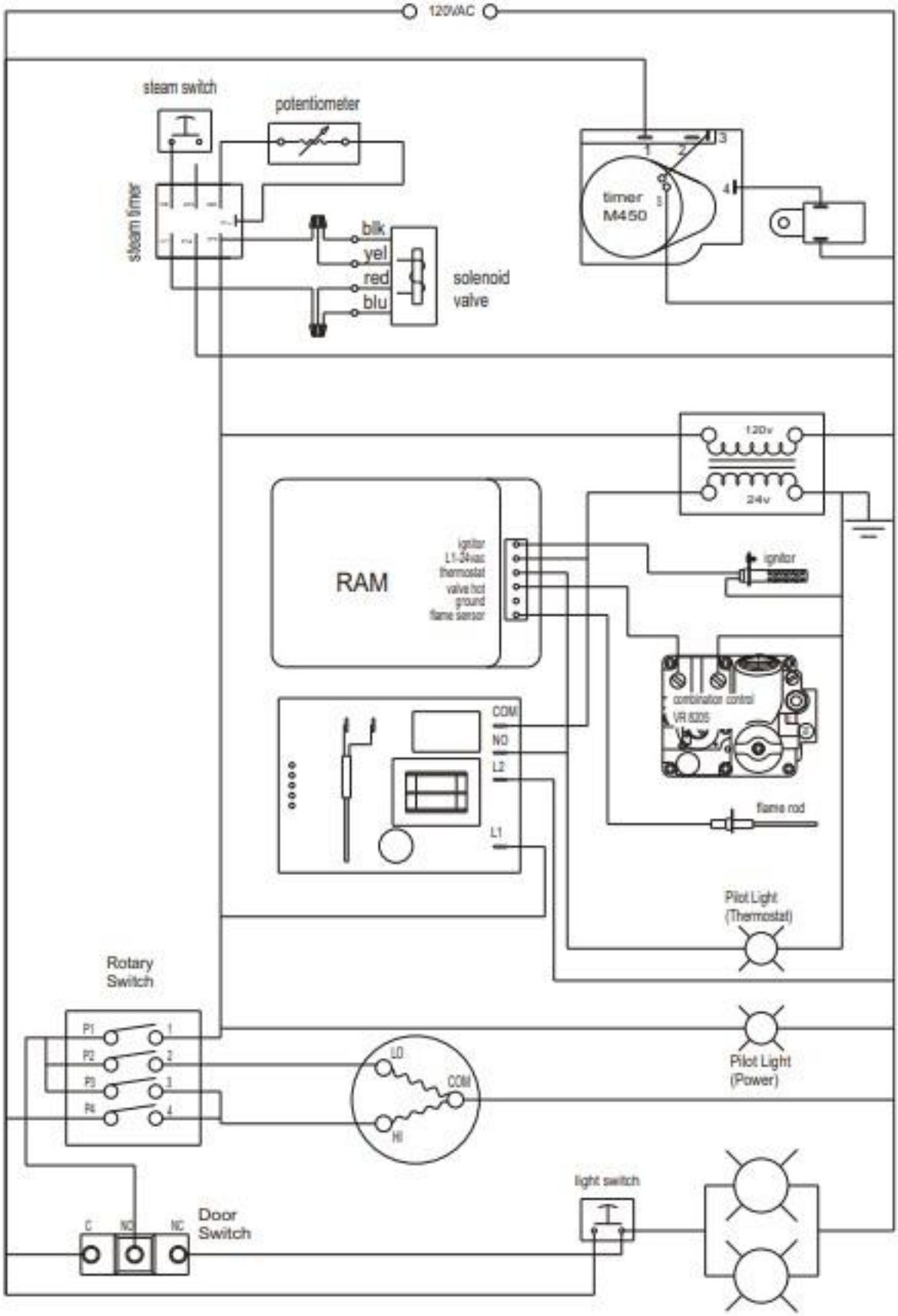
120VAC
steam switch
potentiometer
steam timer
timer
M450
blk
yel
red
blu
solenoid
valve
120v
24v
RAM
igniter
L1-24vac
thermostat
valve hot
ground
flame sensor
igniter
combination control
VR 8205
COM
NO
L2
L1
flame rod
Pilot Light
(Thermostat)
Rotary
Switch
P1
P2
P3
P4
LO
COM
HI
Pilot Light
(Power)
light switch
C
NO
NC
Door
Switch

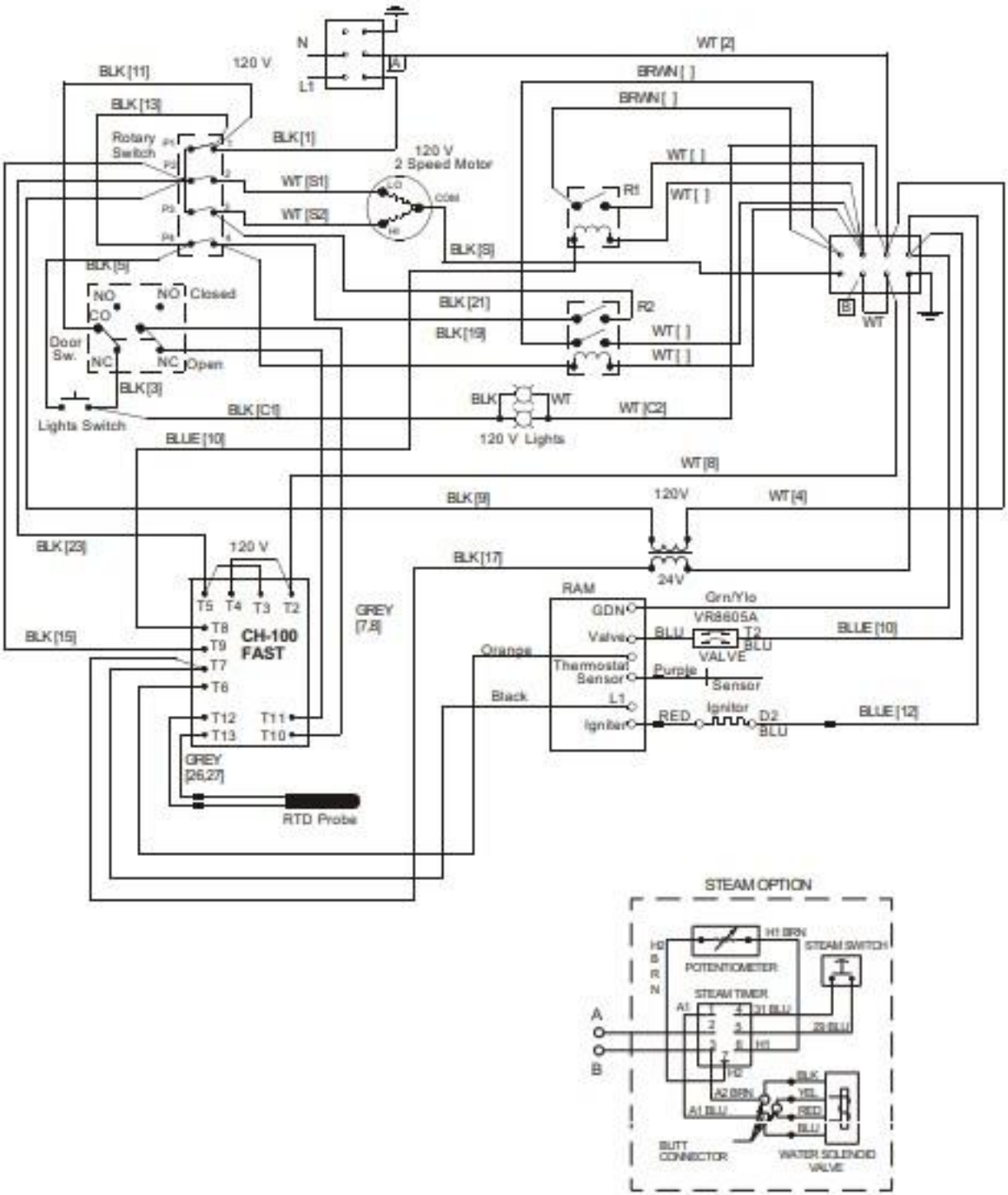
N
L1
120 V
WT [2]
BLK [11]
BLK [13]
BRWN [ ]
BRWN [ ]
Rotary Switch
BLK [1]
120 V
2 Speed Motor
WT [ ]
WT [S1]
WT [ ]
R1
WT [S2]
BLK [5]
BLK [5]
NO
NO
Closed
CO
Door Sw.
NC
NC
Open
BLK [21]
R2
BLK [19]
WT [ ]
WT [ ]
WT
BLK [3]
BLK
WT
BLK [C1]
WT [C2]
Lights Switch
120 V Lights
BLUE [10]
WT [8]
BLK [9]
120V
WT [4]
BLK [23]
120 V
BLK [17]
24V
T5 T4 T3 T2
T8
T9
T7
T6
CH-100
FAST
T12
T13
T11
T10
GREY
[7,8]
RAM
GDN
Grn/Ylo
VR8605A
Valve
BLU
T2
BLU
BLUE [10]
VALVE
BLK [15]
Orange
Thermostat
Sensor
Purple
Sensor
Black
L1
Ignitor
RED
D2
BLU
BLUE [12]
Igniter
GREY
[26,27]
RTD Probe
STEAM OPTION
H1 BRN
STEAM SWITCH
H2
B
R
N
POTENTIOMETER
STEAM TIMER
A1
1
4
21 BLU
2
5
23 BLU
3
6
H1
7
H2
A
B
BLK
YEL
A2 BRN
RED
A1 BLU
BLU
BUTT
CONNECTOR
WATER SOLENOID
VALVE

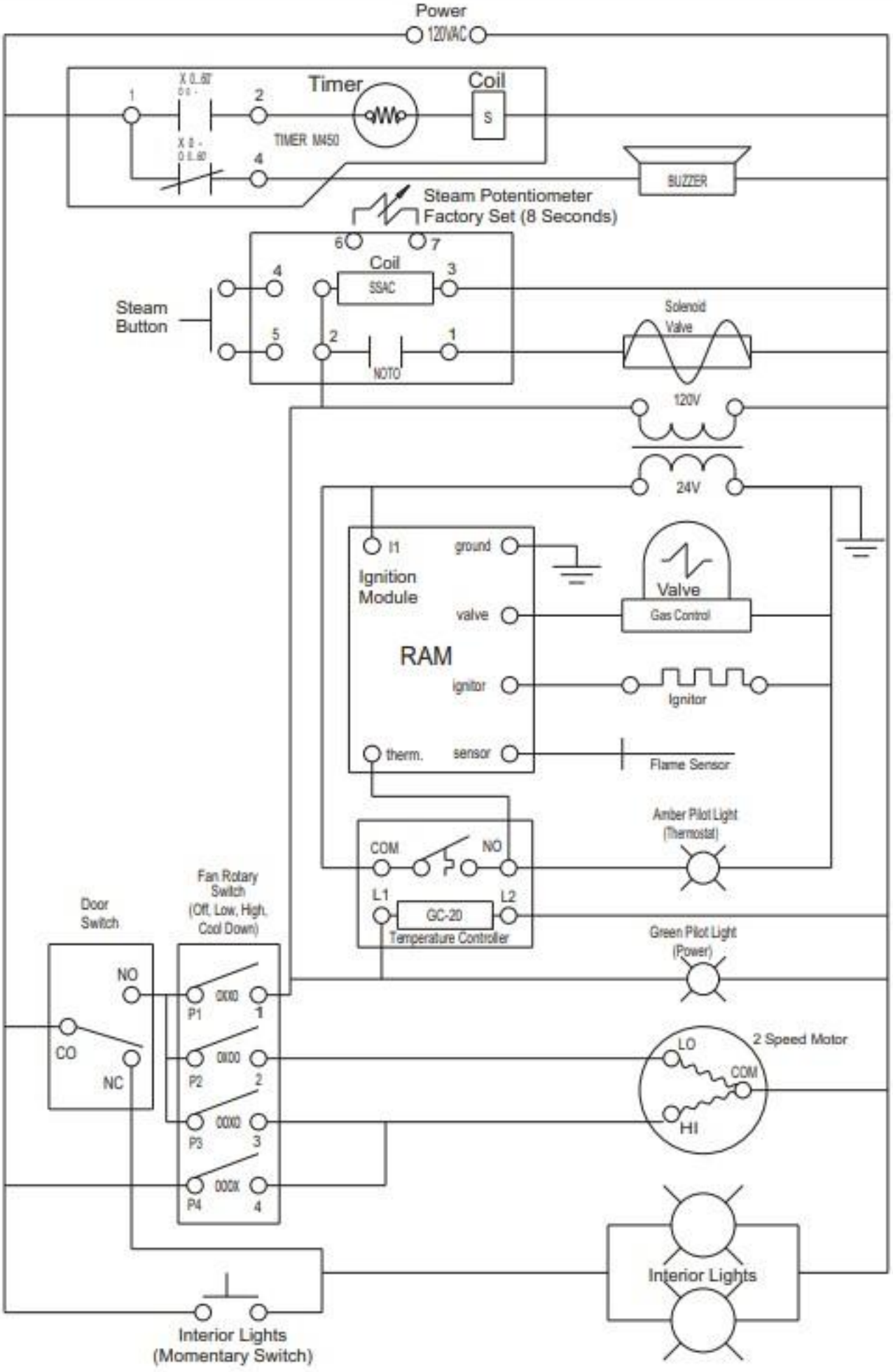
Power
120VAC
Timer
Coil
S
TIMER M450
BUZZER
Steam Potentiometer
Factory Set (8 Seconds)
Coil
SSAC
NOTO
Steam
Button
Solenoid
Valve
120V
24V
I1
ground
Ignition
Module
valve
RAM
ignitor
therm.
sensor
Valve
Gas Control
Ignitor
Flame Sensor
Amber Pilot Light
(Thermostat)
COM
NO
L1
L2
GC-20
Temperature Controller
Green Pilot Light
(Power)
Door
Switch
NO
CO
NC
Fan Rotary
Switch
(Off, Low, High,
Cool Down)
P1
P2
P3
P4
1
2
3
4
2 Speed Motor
LO
COM
HI
Interior Lights
Interior Lights
(Momentary Switch)