Effective Date: September 1, 2012

Aprilaire®

Your Partners in Comfort®

Humidifiers

Dealer Parts List

Model 400/400M Humidifiers

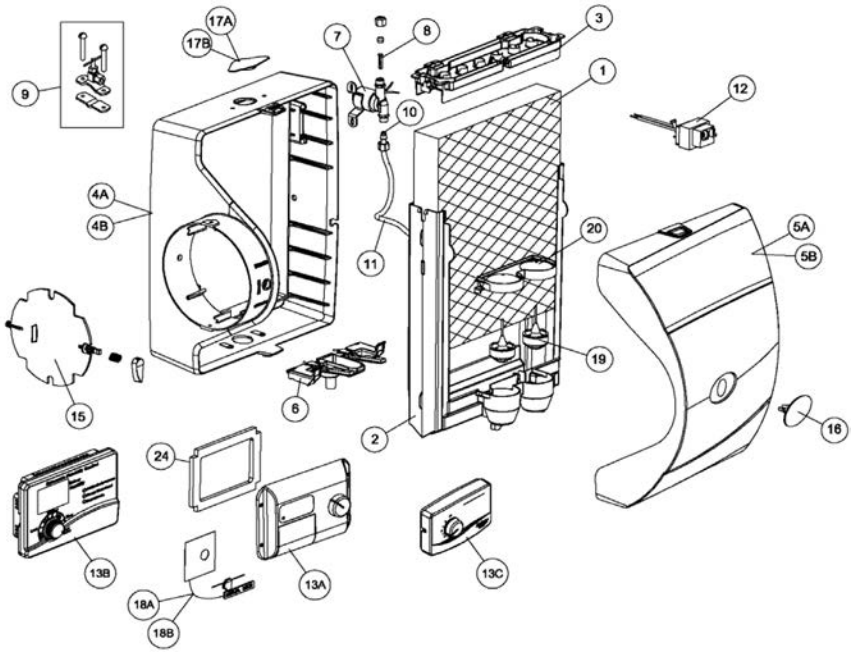

NO.	BLUE/GRAY UNITS - PART NAME	QTY/CTN	MODEL 400 PART NO.		MODEL 400M PART NO.	
4B	Base (blue/gray)	1	4734		4734	
5B	Cover (blue/gray)	1	4728		4728	
13B	Automatic Digital Humidifier Control	1	60		N/A	
16B	Name Plate (blue/gray)	1	4880		4880	
17B	Hole Plug (blue/gray)	1	4741		4741	
18B	Resistor Case & Manual Mode Label	1	4737		N/A	
NO.	**ALMOND UNITS - PART NAME**	**QTY/CTN**	**MODEL 400 PART NO.**		**MODEL 400M PART NO.**	
4A	Base (almond)	1	4404		N/A	
5A	Cover (almond)	1	4329		N/A	
13A	Automatic Humidifier Control	1	56		N/A	
16A	Name Plate (almond)	1	4409		N/A	
17A	Hole Plug (almond)	1	4408		N/A	
18A	Resistor Case & Manual Mode Label	1	4336		N/A	
NO.	**COMMON PARTS**	**QTY/CTN**	**PART NO.**		**PART NO.**	
1	Water Panel Evaporator	10 (5-2 pks.)	45		45	
2	Scale Control Insert w/Float Chamber	6	4403		4403	
3	Water Distribution Tray	1	4407		4407	
6	Water Level Sensor Assembly	1	4410		4410	
7	Water Solenoid Valve (24 Volt)	1	4040		4040	
8	In-line Strainer	12	4004		4004	
9	Saddle Valve	1	4001		4001	
10	Orifice (Yellow)	144 (12-12 pks.)	4231		4231	
11	Feed Tube with Strainer, Orifice, Compression Sleeve and Nut	1	4335		4335	
12	Transformer	1	4010		4010	
15	Damper Assembly	1	4332		4332	
19	Float Assembly	1	4406		4406	
20	Float Cover	1	4405		4405	
24	Automatic Humidifier Control Gasket	1	4305		N/A	
	OTHER	**QTY/CTN**	**PART NO.**		**PART NO.**	
13C	Manual Humidifier Control	1	N/A		4655	
	Outdoor Temperature Sensor	1	8052		N/A	
	Current Sensing Relay	1	50		50	
	Saddle Valve Adapter	6	4229		4229	
	Shock Arrestor	1	4280		4280	
	Maintenance Kits (includes parts 45 (2),4004, 4403, 4406, 4407, 4335 and 4231)	1	4788		4788	
	Blower Activation Relay	10	4851		4851	

Model 500/500M & 600/600M Humidifiers

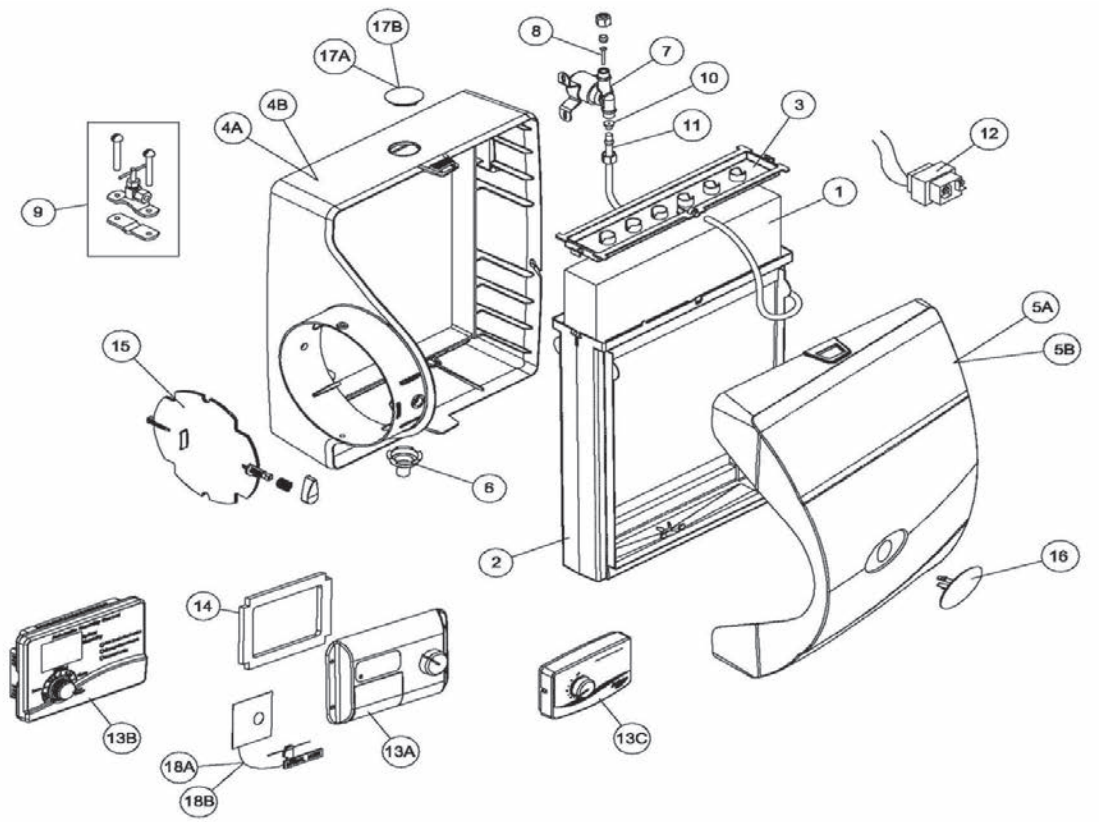

NO.	BLUE/GRAY UNITS - PART NAME	QTY/CTN	MODEL 500, 500A & 500M PART NO.		MODEL 600, 600A & 600M PART NO.
4B	Base (Blue/Gray)	1	4730		4731
5B	Cover (Blue/Gray)	1	4727		4728
13B	Automatic Digital Humidity Control	1	60		60
16B	Name Plate (Blue/Gray)	1	4881		4882
17B	Hole Plug (Blue/Gray)	1	4733		4733
18B	Resistor Case & Manual Mode Label	1	N/A		4737
NO.	**ALMOND UNITS - PART NAME**	**QTY/CTN**	**MODEL 500, 500A & 500M PART NO.**		**MODEL 600, 600A & 600M PART NO.**
4A	Base (Almond)	1	4641		4328
5A	Cover (Almond)	1	4642		4329
13A	Automatic Humidifier Control	1	56		56
16A	Name Plate (Almond)	1	4643		4333
17A	Hole Plug (Almond)	Obselete			
18A	Resistor Case & Manual Label	1	4336		4336
	COMMON PARTS	**QTY/CTN**	**PART NO.**		**PART NO.**
1	Water Panel® Evaporator	10	10		35
2	Scale Control Insert	(4640-10) (4330-8)	4640		4330
3	Water Distribution Tray	1	4331		4331
6	Drain Spud	6	4223		4223
7	Water Solenoid Valve (24 Volt)	1	4040		4040
8	In-Line Strainer	12	4004		4004
9	Saddle Valve	1	4001		4001
10	Orifice (Yellow)	144 (12-12 pks.)	4231		4231
11	Feed Tube with Strainer, Orifice, Compression Sleeve and Nut	1	4335		4335
12	Transformer	1	4010		4010
14	Automatic Humidifier Control Gasket	1	N/A		4305
15	Damper Assembly	1	4332		4332
16	Name Plate	1	4643		4333
	OTHER PARTS	**QTY/CTN**	**PART NO.**		**PART NO.**
13C	Manual Humidifier Control	1	4655		4655
	Outdoor Temperature Sensor (only available for automatic units)	1	8052		8052
	Current Sensing Relay	1	50		50
	Saddle Valve Adapter	6	4229		4229
	Shock Arrestor	1	4280		4280
	Maintenance Kits (includes parts 10, 4335, 4231, 4004, 4640, 4331 and 4223)	1	4792		N/A
	Maintenance Kits (includes parts 35, 4232, 4004, 4330, 4331 and 4223)	1	N/A		4839
	Blower Activation Relay	10	4851		4851

Model 558, 550A, 550, 568, 560A, 560 Humidifiers
(Almond Units)

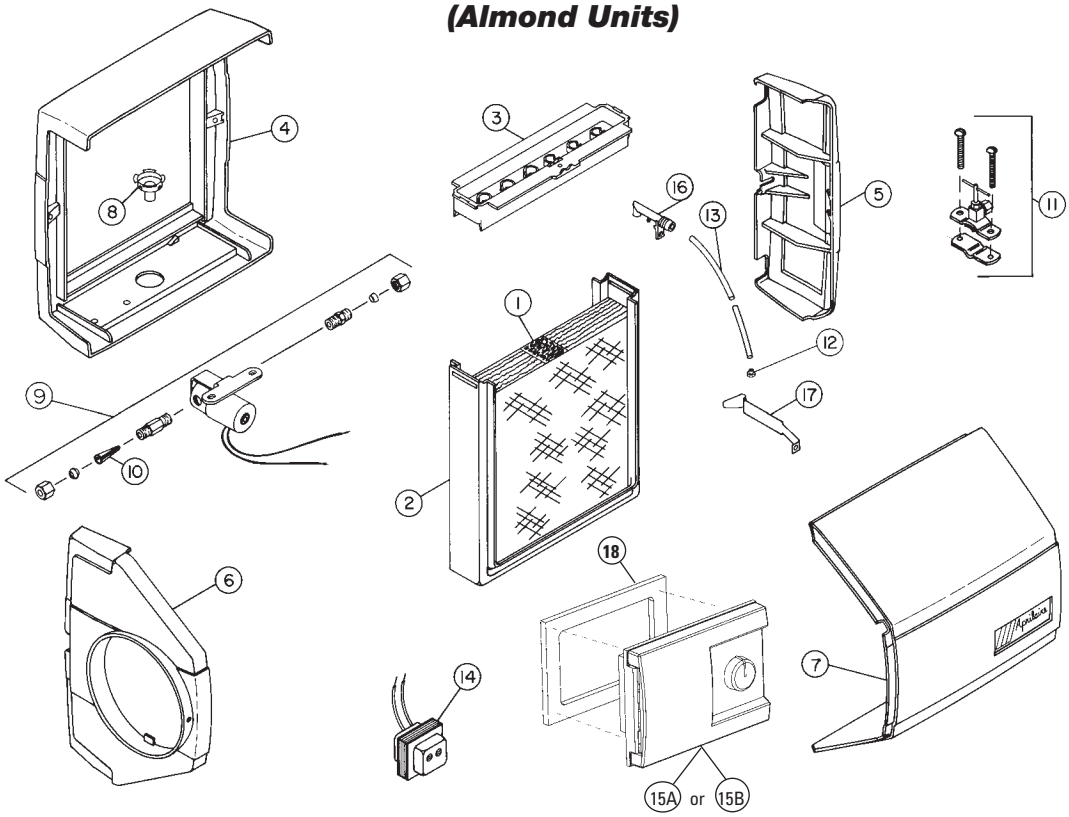

NO.	PART NAME	QTY/CTN	MODEL 558/550A/550 PART NO.		MODEL 568/560A/560 PART NO.
1	Water Panel® Evaporator	10	10		35
2	Scale Control Insert	(4217-10) (4236-12)	4217		4236
3	Water Distribution Tray	1	4218		4277
4	Base	1	4219		4262
5	End Panel	1	4220		4263
6	Duct Panel	1	4221		4264
6	Duct Panel for Integral Damper	1	4526		N/A
7	Cover With Latch And Label	1	4222		4265
8	Drain Spud	6	4223		4223
9	Water Solenoid Valve (24 Volt)	1	4040		4040
10	In-Line Strainer	12	4004		4004
11	Saddle Valve	1	4001		4001
12	Orifice (Yellow)	144 (12-12 pks.)	4231		4231
13	Feed Tube with Strainer, Orifice, Compression Sleeve and Nut	1	4226		4266
14	Transformer	1	4010		4010
15A	Automatic Humidifier Control	1	56		56
15B	Manual Humidistat	1	4655		4655
16	Nozzle	1	4184		4184
17	Cover Latch Spring	1	4225		4225
18	Automatic Humidifier Control Gasket	1	4305		4305
	OTHER PARTS	**QTY/CTN**	**PART NO.**		**PART NO.**
	Outdoor Temperature Sensor	1	8052		8052
	Current Sensing Relay	1	50		50
	Saddle Valve Adapter	6	4229		4229
	Shock Arrestor	1	4280		4280
	Damper Assembly	1	4332		N/A
	Maintenance Kits (includes parts 10, 4226, 4231, 4004, 4217, 4218 and 4223)	1	4793		N/A
	Maintenance Kits (includes parts 35, 4266, 4231, 4004, 4236, 4277 and 4223)	1	N/A		4837
	Blower Activation Relay	10	4851		4851

Model 700/700M, 768, 760A & 760 Humidifiers

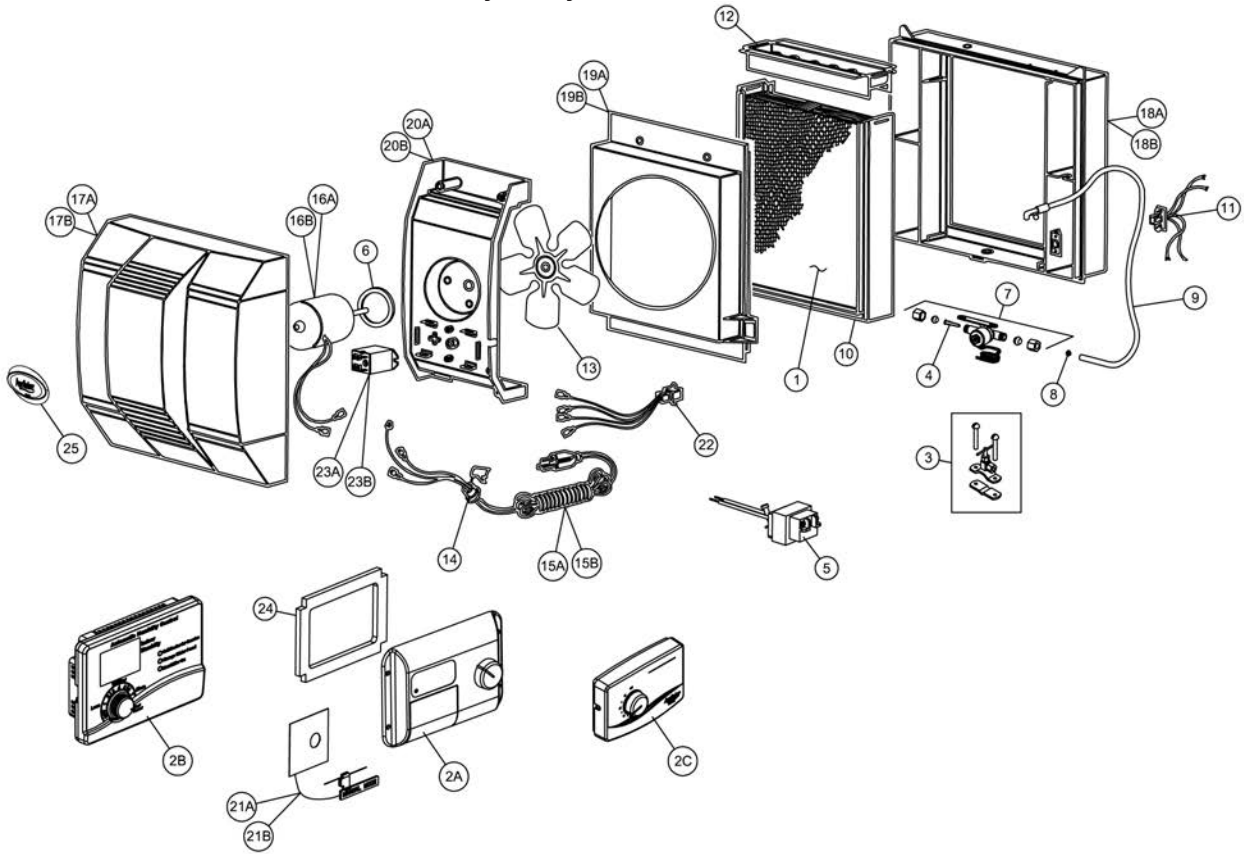

NO.	BLUE/GRAY UNITS PART NAME	QTY/CTN	MODEL 700 PART NO.		MODEL 700M PART NO.
2B	Automatic Digital Humidifier Control	1	60		N/A
5	Transformer	1	4010		4010
15B	Power Cord (Blue/Gray)	1	4664		4664
16B	Motor (Blue/Gray)	1	4670		4670
17B	Cover (Blue/Gray)	1	4729		4729
18B	Base (Blue/Gray)	1	4732		4732
19B	Orifice Plate (Blue/Gray)	1	4735		4735
20B	Bridge	1	4736		4736
21B	Resistor Case & Manual Mode Label	1	4737		N/A
22B	Female Disconnect Assembly	1	4739		4739
23B	Relay	1	4740		4740
NO.	ALMOND UNITS PART NAME	QTY/CTN	MODEL 700 PART NO.		MODEL 700, 768, 760A, 760 PART NO.
2A	Automatic Humidifier Control	1	N/A		56
15A	Power Cord (Almond)	1	N/A		4241
16A	Motor (Almond)	1	N/A		4237
17A	Cover (Almond)	1	N/A		4242
18A	Base (Almond)	1	N/A		4245
19A	Orifice Plate (Almond)	1	N/A		4244
20A	Bridge	1	N/A		4243
21A	Resistor Case & Manual Mode Label	1	N/A		4336
22A	Female Disconnect Assembly	1	N/A		4239
23A	Circuit Board	1	N/A		4238
24	Automatic Humidifier Control Gasket	1	N/A		4305
NO.	COMMON PARTS	QTY/CTN	PART NO.		PART NO.
1	Water Panel® Evaporator	10	35		35
3	Saddle Valve	1	4001		4001
4	In-line Strainer	12	4004		4004
6	Cork Isolator	6	4031		4031
7	Water Solenoid Valve (24 Volts)	1	4040		4040
8	Orifice (Blue)	144 (12-12 pks.)	4232		4232
9	Feed Tube with Strainer, Orifice, Compression Sleeve and Nut	1	4235		4235
10	Scale Control Insert	12	4236		4236
11	Male Disconnect Assembly	1	4240		4240
12	Water Distribution Tray	1	4246		4246
13	Fan Blade	1	4247		4247
14	Electrical Grommet	1	4249		4249
25	Name Plate Assembly	1	4968		4968
	OTHER PARTS	QTY/CTN	PART NO.		PART NO.
2C	Manual Humidifier Control	1	N/A		4655
	Outdoor Temperature Sensor (only available for automatic units)	1	8052		8052
	Current Sensing Relay	1	50		50
	Saddle Valve Adapter	6	4229		4229
	Shock Arrestor	1	4280		4280
	Maintenance Kits (includes parts 35 (2), 4236, 4235, 4246, 4232 and 4004)	1	4750		4750
	Blower Activation Relay	10	4851		4851

Model 800 Residential Steam Humidifier

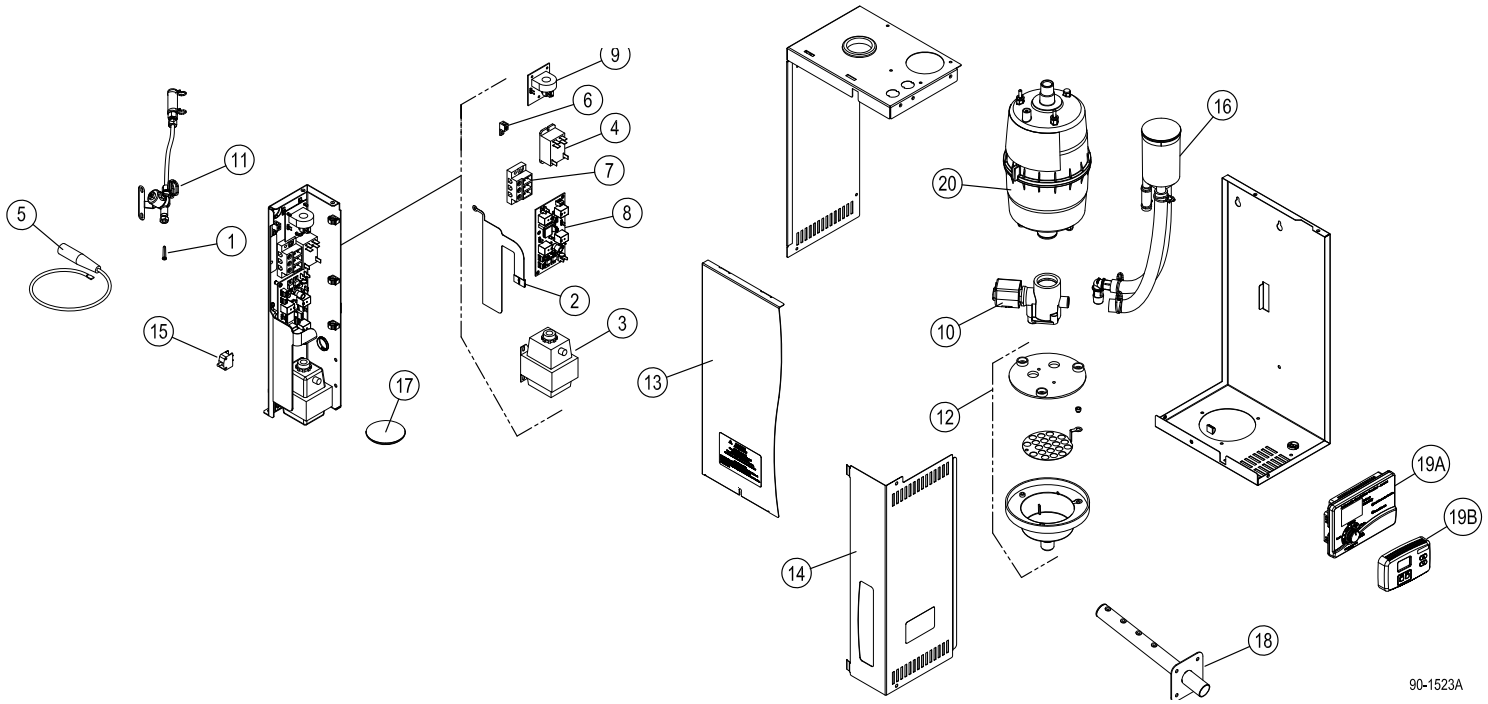

NO.	PART NAME	QTY/CTN	PART NO.
1	Fill Valve In-line Strainer	12	4004
2	Membrane Switch	1	4975
3A	Transformer, 120/24 VAC for 11.5 amp unit* & fill valve contained within housing	1	4976
3B	Transformer, universal for units with fill valve inlet extending from bottom of housing	1	5306
4	Power Relay	1	4977
5	Electrode Wire	1	4978
6	Ground Lug	1	4979
7A	Input Power Terminal Block 3-post for 11.5 amp unit* and fill valve contained within housing	1	4980
7B	Input Power Terminal Block 2-post for 11.5 amp unit* and fill valve inlet extending from bottom of housing	1	5307
7C	Input Power Terminal Block 2-post for 11.5/16.0 amp unit*	1	5354
8	Internal Control Circuit Board	1	4981
9	Current Sensing Circuit Board	1	4982
10	Drain Valve	1	4983
11A	Inlet Fill Valve and Water Feed System for unit with fill valve contained within housing	1	4984
11B	Inlet Fill Valve and Water Feed System for unit with fill valve inlet extending from bottom of housing	1	5309
12	Drain Cup Assembly	1	4985
13	Front Panel and Screw	1	4986
14	Electrical Access Panel and Screw	1	4987
15	Safety Interlock Switch	1	4988
16	Fill Cup and Hoses	1	4989
17	Fill Cup Cap	1	4990
18	Steam Dispersion Tube and Screws	1	4991
19A	Automatic Digital Control	1	62
19B	Digital Manual Control (Wall Mounted)	1	65
20	Steam Canister and O-Ring	6	80
21	Transformer terminal block for unit with fill valve inlet extending from bottom of housing.	1	5308
22	O-Ring for Steam Canister	6	5258
	OTHER PARTS		
	Fan Pack	4	850
	Saddle Valve	1	4001
	Drain Trap Assembly	1	4028
	Manual Humidistat and Blower Activation Relay	1	4993
	Airflow Proving Switch	1	4592
	High Humidity Limit Switch	1	4594
	Condensate Pump (Rated for 160° F)	1	4856
	Steam Hose (6ft) and Clamps	1	4973
	Drain Hose (10 ft.) and Clamps	1	4974

* See data label on side of humidifier to determine if unit draws 11.5 amps or 11.5/16.0 amps.

Model 350 Humidifiers

NO.	PART NAME	QTY/CTN	PART NO.
1	Inlet Frame Almond	1	4206
	Inlet Frame Gray	1	4852
2	Scale Control Insert	12	4181
3	Water Panel® Evaporator	10	35
4	Distribution Tray	1	4182
5	Distribution Tray Cover	1	4183
6	Nozzle	1	4184
7	Baffle	1	4185
8	Housing Almond	1	4186
	Housing Gray	1	4858
9	Drain Spud	1	4187
10	Fan Blade	1	4188
11	Motor	1	4189
12	Motor Brackets	1 Set	4190
13	Solenoid Valve (Plastic Junction Box)	1	4191
14	Orifice (Blue)	144 (12-12 pks.)	4232
15	120 Volt Humidifier Control - Replaces 4013	1	4258
16	Feed Tube with Strainer, Orifice, Compression Sleeve and Nut	1	4079
17	Junction Box Cover	1	4193
18	Junction Box	1	4194
19	Humidistat	1	4655
20	In-Line Strainer	12	4004
21	Power Cord	1	4286
24	Saddle Valve	1	4001
25	Angle Support Almond	2	4813
	Angle Support Gray	2	4875
26	Outlet Transition Almond	1	4201
	Outlet Transition Gray	1	4854
27	Joist Bracket Almond	2	4202
	Joist Bracket Gray	2	4874
	OTHER PARTS		
	Screws and Clips Almond	1	4203
	Screws and Clips Gray	1	4850
	Saddle Valve Adapter	6	4229
	Shock Arrestor	1	4280

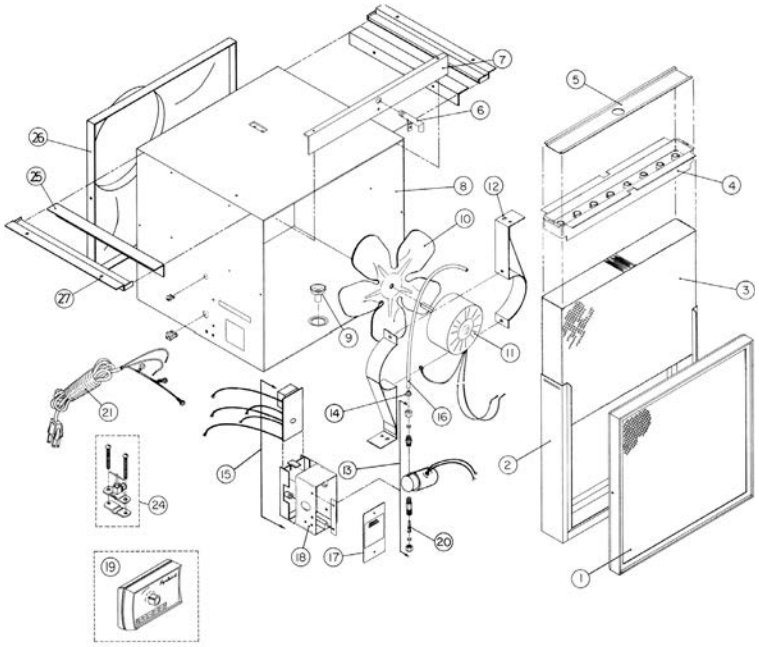

Model 360 Humidifiers

NO.	PART NAME	QTY/CTN	PART NO.
1	Inlet Frame Almond	1	4206
	Inlet Frame Gray	1	4852
2	Scale Control Insert	12	4181
3	Water Panel® Evaporator	10	35
4	Distribution Tray	1	4182
5	Distribution Tray Cover	1	4183
6	Nozzle	1	4184
7	Baffle	1	4185
8	Housing Almond	1	4198
	Housing Gray	1	4858
9	Drain Spud	1	4187
10	Fan Blade	1	4215
11	Motor	1	4199
12	Motor Brackets	1 Set	4190
13	Solenoid Valve (Plastic Junction Box)	1	4191
14	Orifice (Blue)	144 (12-12 pks.)	4232
15	120 Volt Humidifier Control - Replaces 4013	1	4258
16	Feed Tube with Strainer, Orifice, Compression Sleeve and Nut	1	4079
17	Junction Box Cover	1	4193
18	Junction Box	1	4194
19	Humidistat	1	4655
20	In-Line Strainer	12	4004
21	Power Cord	1	4286
24	Saddle Valve	1	4001
25	Outlet Grille Almond	1	4204
	Outlet Grille Gray	1	4859
26	Inlet Wall Frame Almond	1	4205
	Inlet Wall Frame Gray	1	4860
	OTHER PARTS		
	Screws and Clips Almond	1	4203
	Screws and Clips Gray	1	4850
	Saddle Valve Adapter	6	4229
	Shock Arrestor	1	4280

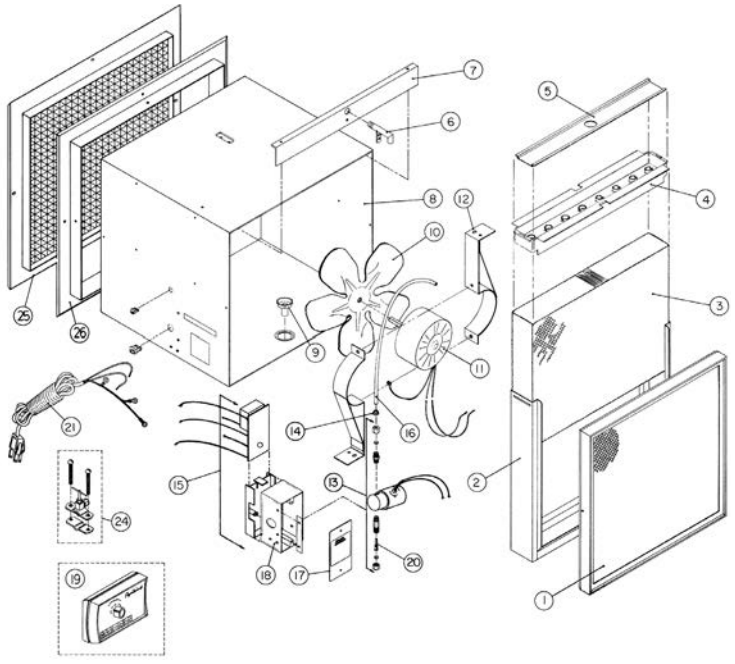

Model 1150, 1160 & 1180 Steam Humidifiers

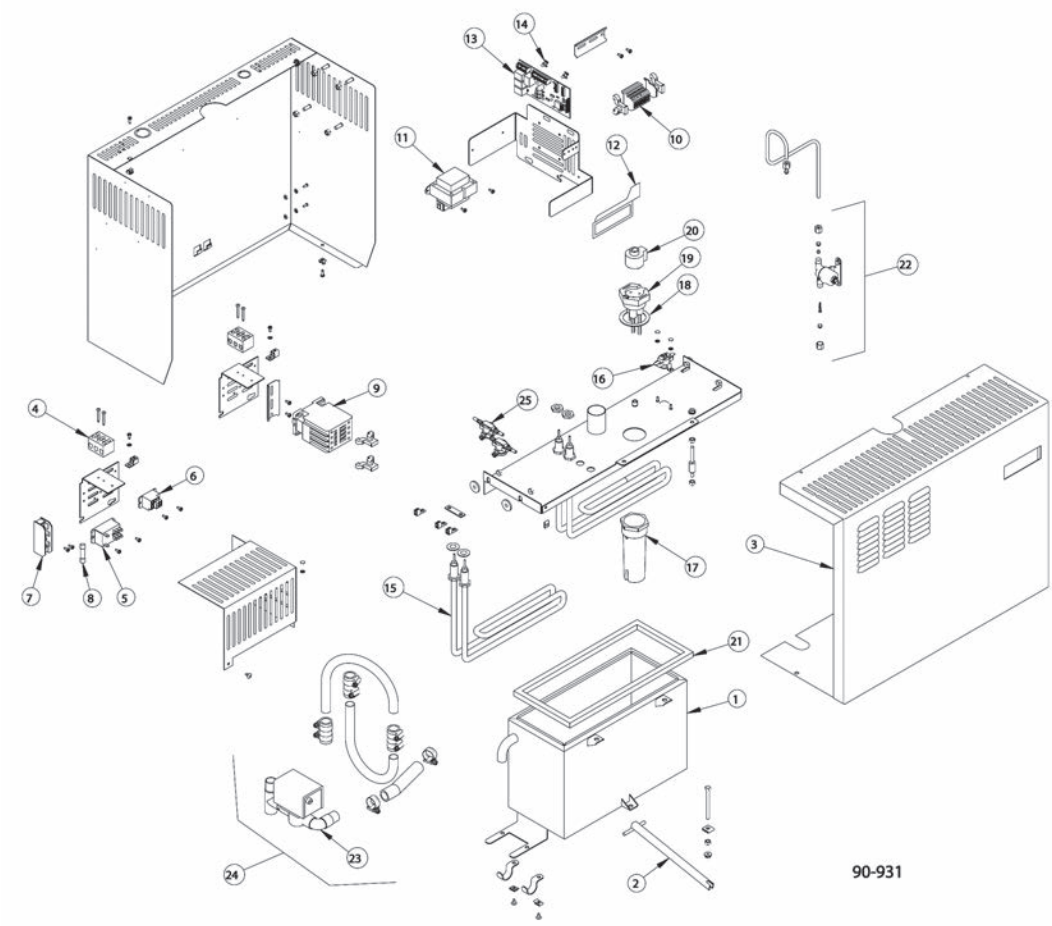

NO.	PART NAME	QTY/CTN	PART NO.
1	Steam Chamber, 1150	1	4560
	Steam Chamber, 1160	1	4561
	Steam Chamber, 1180	1	4627
2	Quick Release Handle, 1150	1	4562
	Quick Release Handle, 1160	1	4563
	Quick Release Handle, 1180	1	4628
3	Cover 1150 & 1160	1	4564
	Cover 1180	1	4629
4	Terminal Block	1	4565
5	Relay, AC Safety (1150)	1	4566
6	Relay, DC Control (1150)	1	4567
7	Fuse Holder (1150)	1	4568
8	Fuse, 25 Amp (1150)	1	4569
9	Contactor (1160 & 1180)	1	4570
10	Terminal	1	4571
11	Transformer	1	4572
12	Overlay & Switch	1	4573
13	Internal Control Board	1	4574
14	Standoff	1	4575
15	Heater (1150 & 1160)	1	4576
	Heater (1180)	1	4630
16	Over-Temperature Thermostat	1	4577
17	Probe Housing	1	4578

NO.	PART NAME	QTY/CTN	PART NO.
18	Water Level Probe Gasket	1	4579
19	Water Level Probe Assy	1	4580
20	Plug	1	4581
21	Gasket, 1150 Steam Chamber	1	4582
	Gasket, 1160 Steam Chamber	1	4583
	Gasket, 1180 Steam Chamber	1	4631
22	Fill Valve	1	4584
23	Drain Valve	1	4585
24	Drain Assy	1	4587
25	Thermal Cutout	1	4595
	OTHER PARTS		
	Wiring Harness	1	4637
	Hose, 1-1/2" Dia. (1150 & 1160)	1	4588
	Hose, 2" Dia. (1180)	1	4632
	Distribution Tube, 1-1/2" Dia x 10" (1150)	1	4589
	Distribution Tube, 1-1/2" Dia x 16" (1160)	1	4590
	Distribution Tube, 2" Dia x 28" (1180)	1	4633
	Duct Plate (1150 & 1160)	1	4591
	Duct Plate (1180)	1	4636
	Airflow Switch	1	4592
	Automatic Steam Humidifier Control	1	57
	Hanging Bracket	1	4593
	High Humidity Limit Switch	1	4594

Model 1120, 1130 & 1140 Humidifiers

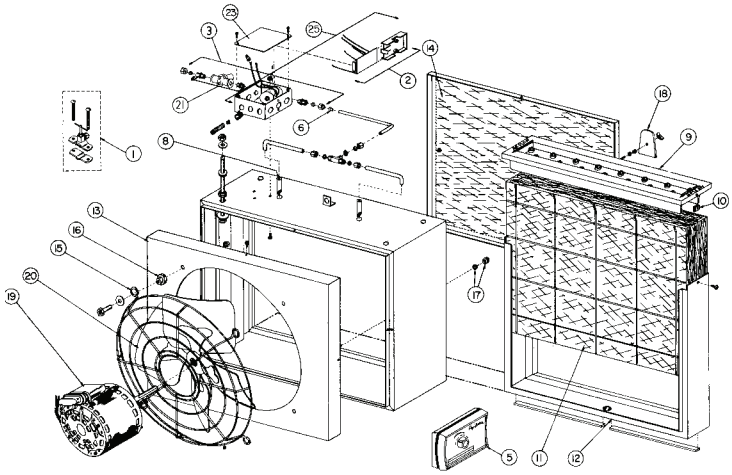

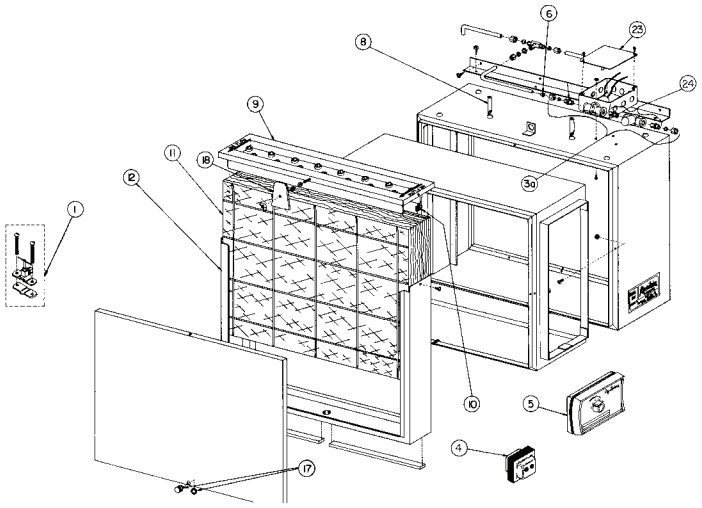

NO.	PART NAME	QTY/CTN	MODEL NO.	PART NO.
1	Saddle Valve	1	1120-1130-1140	4001
2	120 Volt Humidifier Control	1	1120	4258
3	Solenoid Valve	1	1120-1140	4026
3A	Solenoid Valve	1	1130	4051
4	Transformer	1	1130	4010
5	Humidistat	1	1120-1130-1140	4655
6	Orifice (Green)	12	1120-1130-1140	4104
8	Extension Tube	2	1120-1130-1140	4106
9	Water Distribution Tray	1	1120-1130-1140	4107
10	Tinnerman Clip	2	1120-1130-1140	4108
11	Water Panel® Evaporator	1	1120-1130-1140	1200
12	Water Panel Frame	1	1120-1130-1140	4109
13	Motor Mounting Plate	1	1120	4111
14	Grille	1	1120-1140	4113
15	Fan Guard	1	1120	4115
16	Isolator	4	1120	4116
17	Knob and Retainer	1	1120-1130-1140	4117
18	Locking Device	1	1120-1130-1140	4118
19	Motor	1	1120	4122
20	Fan Blade	1	1120	4123
21	Commercial Strainer	1	1120-1130-1140	4227
	OTHER PARTS			
	Fuse	6	1101	4152
	Limit Switch	1	1101	4228

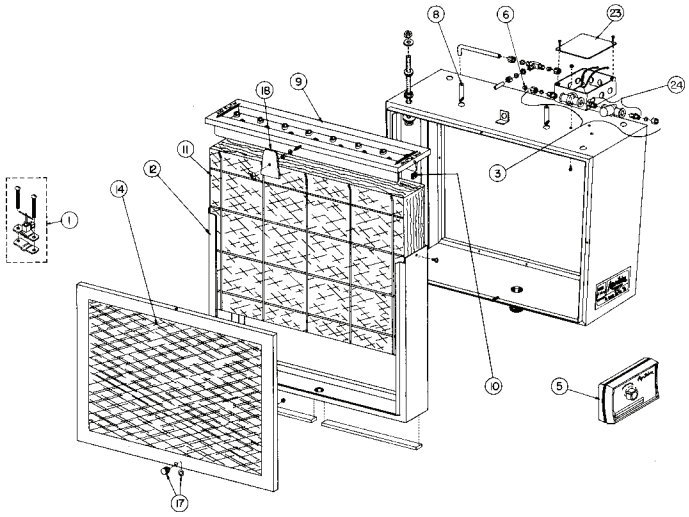

Aprilaire®

P.O. Box 1467 • Madison, WI 53701-1467 • Phone: 800/334-6011 • Fax: 608/257-4357 • www.aprilairepartners.com

Printed in U.S.A.
Form No. 176B 8.12
© 2010 Aprilaire – A division of Research Products Corporation