Delfield®

ILLUSTRATED PARTS LIST

4400 Series
Compact Refrigerators

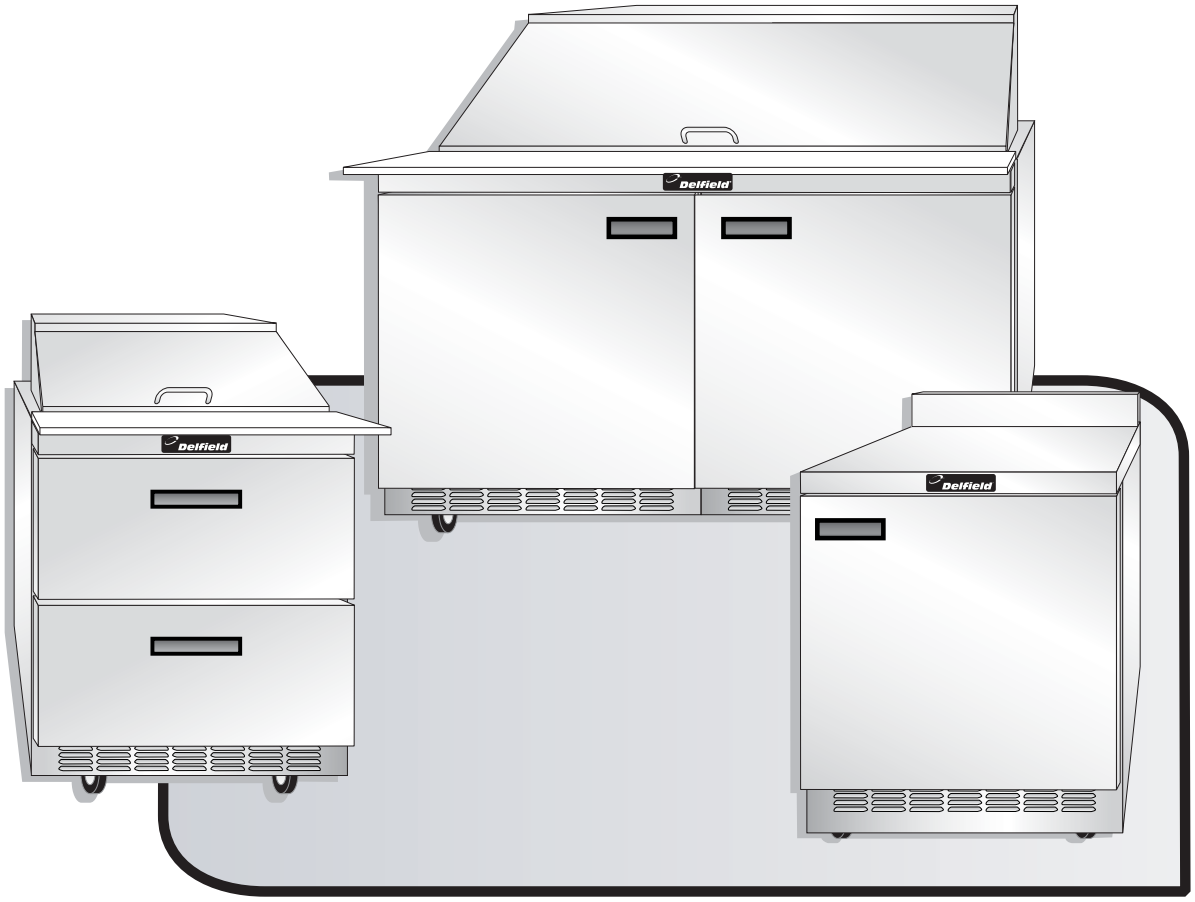

Delfield 980 S. Isabella Rd., Mt. Pleasant, MI 48858
(989) 773-7981 or (800) 733-8829 • Fax (989) 773-3210
www.delfield.com

June 2006

CONTENTS

FIGURE 1: REFRIGERATOR BASES, FRONT VIEW 3
TABLE 1: REFRIGERATOR BASES, FRONT VIEW (Sheet 1 of 4) 4
TABLE 1: REFRIGERATOR BASES, FRONT VIEW (Sheet 2 of 4) 5
TABLE 1: REFRIGERATOR BASES, FRONT VIEW (Sheet 3 of 4) 6
TABLE 1: REFRIGERATOR BASES, FRONT VIEW (Sheet 4 of 4) 7

FIGURE 2: REFRIGERATOR BASES, REAR VIEW 8
TABLE 2: REFRIGERATOR BASES, REAR VIEW (Sheet 1 of 2) 9
TABLE 2: REFRIGERATOR BASES, REAR VIEW (Sheet 2 of 2) 10

FIGURE 3: SALAD TOP UNITS, CUTTING BOARDS 12
TABLE 3: SALAD TOP UNITS, CUTTING BOARDS 13

FIGURE 4: MEGA TOP UNITS, CUTTING BOARDS 14
TABLE 4: MEGA TOP UNITS, CUTTING BOARDS 15

FIGURE 5: DRAWER ASSEMBLIES 16
TABLE 5: DRAWER ASSEMBLIES 17

FIGURE 6: CASTER AND LEGS 18
TABLE 6: CASTER AND LEGS 18

SPARES FOR TELESCOPING COVERS 19

TELESCOPING COVERS REPLACEABLE PARTS 19

FIGURE 1: REFRIGERATOR BASES, FRONT VIEW

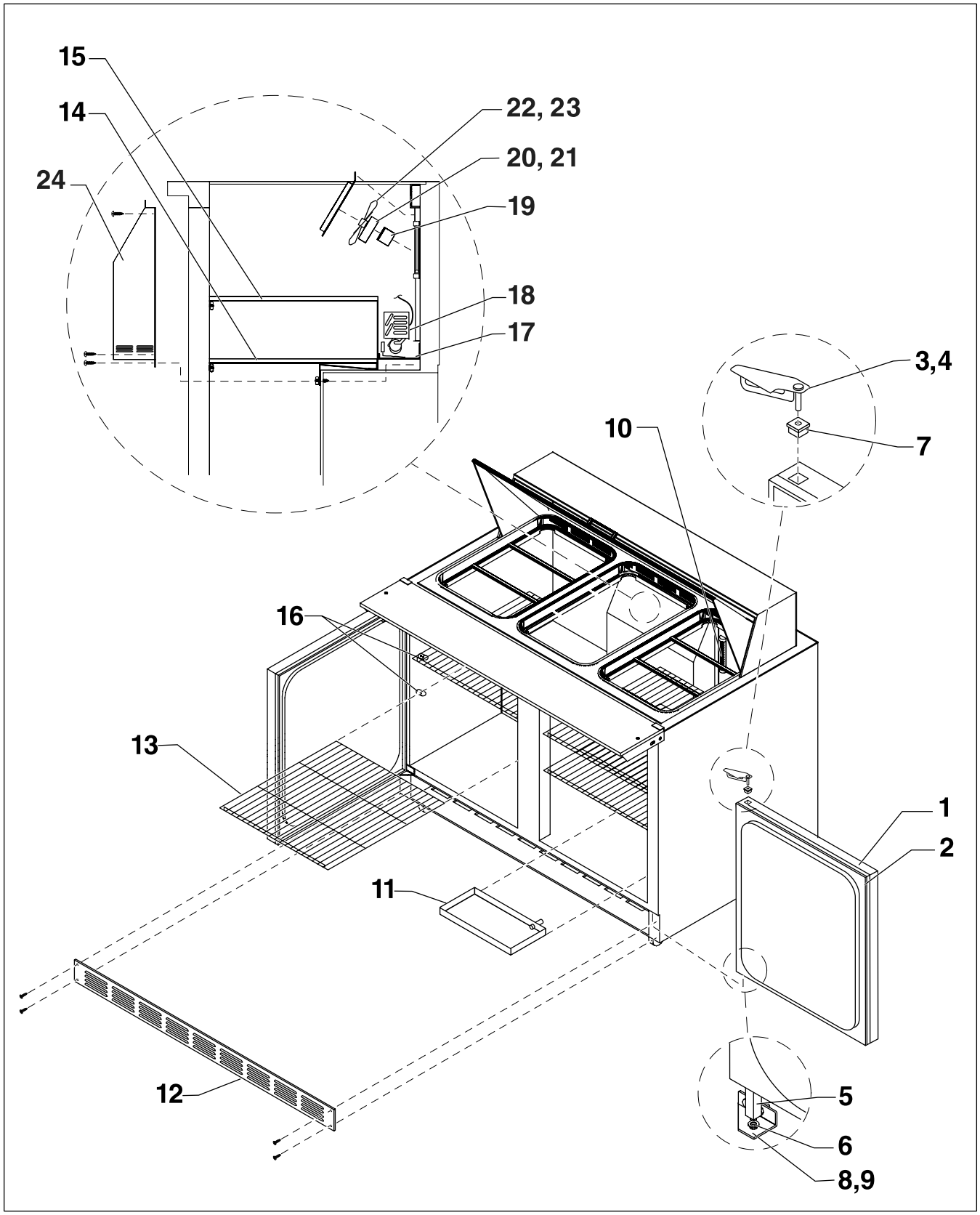

TABLE 1: REFRIGERATOR BASES, FRONT VIEW (Sheet 1 of 4)

REF NO.	PART NUMBER	REFRIGERATOR BASE LENGTHS	27-inch (68.6 cm)		32-inch (81.3 cm)		48-inch (121.9cm)	
		REFRIGERATOR BASE FRONT STYLE	1-Door	2-Drawer	1-Door	2-Drawer	2-Door	4-Drawer
		REFRIGERATOR BASE MODEL NUMBERS	4427N	D4427N	4432N	D4432N	4448N	D4448N
			ST4427N	STD4427N	ST4432N	STD4432N	ST4448N	STD4448N
			UC4427N	UCD4427N	UC4432N	UCD4432N	UC4448N	UCD4448N
		REPLACEMENT PART DESCRIPTION	REPLACEMENT PART QUANTITY REQUIRED FOR EACH OF THE ABOVE MODELS					
1	000-B4X-0030	DOOR ASSEMBLY, RH, 24" (61 cm)					1	
	000-B4X-0031	DOOR ASSEMBLY, LH, 24" (61 cm)					1	
	000-B4X-0032	DOOR ASSEMBLY, RH, 27" (68.6 cm)	1					
	000-B4X-0033	DOOR ASSEMBLY, LH, 27" (68.6 cm) (OPTIONAL LH HINGE)	1*					
	000-B4X-0036	DOOR ASSEMBLY, RH, 32" (81.3 cm)			1			
	000-B4X-0037	DOOR ASSEMBLY, LH, 32" (81.3 cm) (OPTIONAL LH HINGE)			1*			
2	1702473	GASKET, DOOR, 24" (61 cm), 4400					2	2
	1702474	GASKET, DOOR, 27" (68.6 cm), 4400	1	1				
	1702475	GASKET, DOOR, 32" (81.3 cm), 4400			1	1		
	1702562	GASKET, DOOR, 30" (76.2 cm), 4400						
3	3234228	PIVOT BRACKET, RIGHT	1	1	1	1	1	1
4	3234229	PIVOT BRACKET, LEFT					1	1
5	3237516	CARTRIDGE HINGE, CONCLED, 65 IN. LB.	1	1	1	1	2	2
6	3237517	WASHER, NYLON, 0.150" (.38 cm) THICK x 0.775" (2 cm) OD	1	1	1	1	2	2
7	3234225A	SELF CLOSING HINGE CAP	1	1	1	1	1	1
8	3234226	CARTRIDGE BRKT, RIGHT	1	1	1	1	1	1
9	3234227	CARTRIDGE BRKT, LEFT					1	1
10	3516135	THERMOMETER, HANGING, 4" (10.2 cm)	1	1	1	1	1	1
11	0077584	PAN, CONDENSATE, 14.25" (36.2 cm)	1	1	1	1	1	1
12	0077307	PANEL, FRONT, LOUVERED, 4427	1	1				
	0077308	PANEL, FRONT, LOUVERED, 4432			1	1		
	0077309	PANEL, FRONT, LOUVERED, 4448					1	1
13	3978160	SHELF, 24" (61 cm)					2	
	3978161	SHELF, 27" (68.6 cm)	2					
	3978163	SHELF, 32" (81.3 cm)			1			
14	0077585	SUPPORT, SHELF, BOTTOM					1	
15	0077625	SUPPORT, SHELF, TOP					1	
16	3234290	SUPPORT SHELF PLASTIC PLUG	2		8		16	

*OPTIONAL

TABLE 1: REFRIGERATOR BASES, FRONT VIEW (Sheet 2 of 4)

REF NO.	PART NUMBER	REFRIGERATOR BASE LENGTHS	27-inch (68.6 cm)		32-inch (81.3 cm)		48-inch (121.9cm)	
		REFRIGERATOR BASE FRONT STYLE	1-Door	2-Drawer	1-Door	2-Drawer	2-Door	4-Drawer
		REFRIGERATOR BASE MODEL NUMBERS	4427N	D4427N	4432N	D4432N	4448N	D4448N
			ST4427N	STD4427N	ST4432N	STD4432N	ST4448N	STD4448N
			UC4427N	UCD4427N	UC4432N	UCD4432N	UC4448N	UCD4448N
		REPLACEMENT PART DESCRIPTION	REPLACEMENT PART QUANTITY REQUIRED FOR EACH OF THE ABOVE MODELS					
17	121-BXG-0000	PAN, EVAPORATOR, 4400	1	1	1	1	1	1
18	3516296	COIL, CONDENSER, 4427N/32N/48N	1	1	1	1	1	1
19	0072354	BRACKET, FAN, CONDENSER, 4400N	1	1	1	1	1	1
20	2162691	MOTOR, FAN, 115V, 50/60, BAY/JAKEL	1	1	1	1	1	1
23	3516274	BLADE, FAN, 5.56" (14.1 cm), CW, LEXAN, BLACK	1	1	1	1	1	1
24	0072353B	BAFFLE, FAN, CONDENSER, 4400N	1	1	1	1	1	1

TABLE 1: REFRIGERATOR BASES, FRONT VIEW (Sheet 3 of 4)

REF NO.	PART NUMBER	REFRIGERATOR BASE LENGTHS	60-inch (152.4 cm)		64-inch (162.6 cm)		72-inch (183 cm)	
		REFRIGERATOR BASE FRONT STYLE	2-Door	4-Drawer	2-Door	4-Drawer	3-Door	6-Drawer
		REFRIGERATOR BASE MODEL NUMBERS	4460N	D4460N	4464N	D4464N	4472N	D4472N
			ST4460N	STD4460N	ST4464N	STD4464N	ST4472N	STD4472N
			UC4460N	UCD4460N	UC4464N	UCD4464N	UC4472N	UCD4472N
		REPLACEMENT PART DESCRIPTION	REPLACEMENT PART QUANTITY REQUIRED FOR EACH OF THE ABOVE MODELS					
1	000-B4X-0030	DOOR ASSEMBLY, RH, 24" (61 cm)					2	
	000-B4X-0031	DOOR ASSEMBLY, LH, 24" (61 cm)					1	
	000-B4X-0034	DOOR ASSEMBLY, RH, 30" (76.2 cm)	1					
	000-B4X-0035	DOOR ASSEMBLY, LH, 30" (76.2 cm)	1					
	000-B4X-0036	DOOR ASSEMBLY, RH, 32" (81.3 cm)			1			
	000-B4X-0037	DOOR ASSEMBLY, LH, 32" (81.3 cm) (OPTIONAL LH HINGE)			1*			
2	1702473	GASKET, DOOR, 24" (61 cm), 4400					3	3
	1702475	GASKET, DOOR, 32" (81.3 cm), 4400			2	2		
	1702562	GASKET, DOOR, 30" (76.2cm), 4400	2	2				
3	3234228	PIVOT BRACKET, RIGHT	1	1	1	1	1	1
4	3234229	PIVOT BRACKET, LEFT	1	1	1	1	2	2
5	3237516	CARTRIDGE HINGE	2	2	2	2	3	3
6	3237517	WASHER, NYLON, 0.150" (.38 cm) THICK x 0.775" (2 cm) OD	2	2	2	2	3	3
7	3234225A	SELF-CLOSING HINGE CAP	2	2	2	2	3	3
8	3234226	CARTRIDGE BRKT, RIGHT	1	1	1	1	1	1
9	3234227	CARTRIDGE BRKT, LEFT	1	1	1	1	2	2
10	3516135	THERMOMETER, HANGING, 4" (10.2 cm)	1	1	1	1	1	1
11	0077587	PAN, CONDENSATE, 21.25" (54 cm)	1	1	1	1	1	1
12	0077618	PANEL, FRONT, LOUVERED, 4460	1	1				
	0077310	PANEL, FRONT, LOUVERED, 4464			1	1		
	0077688	PANEL, FRONT, LOUVERED, 4472					1	1
13	3978160	SHELF, 24" (61 cm)					3	
	3978162	SHELF, 30" (76.2 cm)	2					
	3978163	SHELF, 32" (81.3 cm)			2			
14	0077585	SUPPORT, SHELF, BOTTOM	1		1		1	
15	0077625	SUPPORT, SHELF, TOP	1		1		1	
16	3234290	SUPPORT SHELF PLASTIC PLUG	16		16		24	

*OPTIONAL

TABLE 1: REFRIGERATOR BASES, FRONT VIEW (Sheet 4 of 4)

REF NO.	PART NUMBER	REFRIGERATOR BASE LENGTHS	60-inch (152.4 cm)		64-inch (162.6 cm)		72-inch (183 cm)	
		REFRIGERATOR BASE FRONT STYLE	2-Door	4-Drawer	2-Door	4-Drawer	3-Door	6-Drawer
		REFRIGERATOR BASE MODEL NUMBERS	4460N	D4460N	4464N	D4464N	4472N	D4472N
			ST4460N	STD4460N	ST4464N	STD4464N	ST4472N	STD4472N
			UC4460N	UCD4460N	UC4464N	UCD4464N	UC4472N	UCD4472N
		REPLACEMENT PART DESCRIPTION	REPLACEMENT PART QUANTITY REQUIRED FOR EACH OF THE ABOVE MODELS					
17	121-BXG-0000	PAN, EVAPORATOR, 4400	2	2	2	2	2	2
18	3516297	COIL, CONDENSER, 4460N/64N/72N	1	1	1	1	1	1
19	0072354	BRACKET, FAN, CONDENSER, 4400N	1	1	1	1	1	1
20	2162691	MOTOR, FAN, 115V, 50/60, BAY/JAKEL	1	1	1	1	1	1
21	2162712	MOTOR, GE, CCW, 115V, 50/60, 2850 RPM	1	1	1	1	1	1
22	3516172	BLADE, FAN, 5.56", CCW, LEXAN, CLEAR	1	1	1	1	1	1
23	3516274	BLADE, FAN, 5.56", CW, LEXAN, BLACK	1	1	1	1	1	1
24	0072353B	BAFFLE, FAN, CONDENSER, 4400N	1	1	1	1	1	1

FIGURE 2: REFRIGERATOR BASES, REAR VIEW

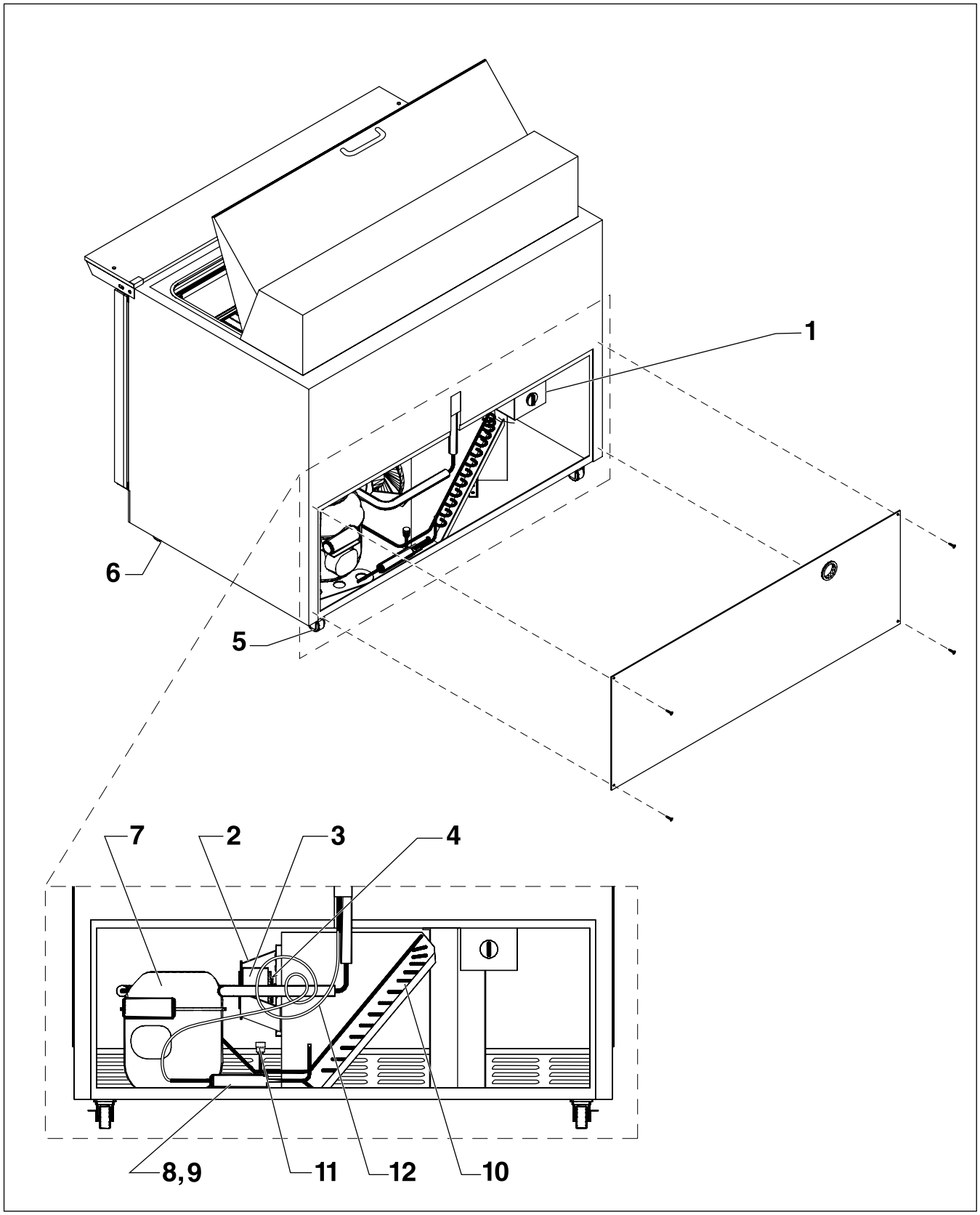

TABLE 2: REFRIGERATOR BASES, REAR VIEW (Sheet 1 of 2)

REF NO.	PART NUMBER	REFRIGERATOR BASE LENGTHS	27-inch (68.6 cm)		32-inch (81.3 cm)		48-inch (121.9cm)	
		REFRIGERATOR BASE FRONT STYLE	1-Door	2-Drawer	1-Door	2-Drawer	2-Door	4-Drawer
		REFRIGERATOR BASE MODEL NUMBERS	4427N	D4427N	4432N	D4432N	4448N	D4448N
			ST4427N	STD4427N	ST4432N	STD4432N	ST4448N	STD4448N
			UC4427N	UCD4427N	UC4432N	UCD4432N	UC4448N	UCD4448N
		REPLACEMENT PART DESCRIPTION	REPLACEMENT PART QUANTITY REQUIRED FOR EACH OF THE ABOVE MODELS					
1*	2194693KT	CONTROL, DANFOSS, KIT	1	1	1	1	1	1
	2194693	TEMP CONTROL ONLY	1	1	1	1	1	1
	2194755	DEFROST PROBE	1	1	1	1	1	1
	2194756	AIR SENSING PROBE	1	1	1	1	1	1
2	0052686	BRACKET, FAN MOTOR 9000, 4200	1	1	1	1	1	1
3	2162667	MOTOR, FAN, 115V/60HZ, 1450 RPM, CW	1	1	1	1	1	1
4	2162681	BLADE, FAN, 7" (17.8 cm), 40 DEGREE PITCH	1	1	1	1	1	1
5	3234147	CASTER, 2" (5 cm), PLT, SWIVEL, HARD RUBBER	2	2	2	2	2	2
6	3234148	CASTER, 2" (5 cm), PLT, SWIVEL, BRK, HD RUBBER	2	2	2	2	2	2
7	3526875	COMPRESSOR, 1/5 HP, HI, R404A	1	1	1	1	1	1
9	3516321	FILTER-DRIER, 250, 2 INLET, 404A	1	1	1	1		
10	3516298	COIL, EVAPORATOR, 4400N	1	1	1	1	1	1
12	0074130	CAP TUBE, .049" (.12 cm) x 108" (274.3 cm)	1	1	1	1	1	1
See Fig. 5	000-B4Y-0030	DRAWER ASSEMBLY, 24" (61 cm), 4400 SERIES						2
See Fig. 5	000-B4Y-0031	DRAWER ASSEMBLY, 27" (68.6 cm), 4400 SERIES		1				
See Fig. 5	000-B4Y-0033	DRAWER ASSEMBLY, 32" (81.3 cm), 4400 SERIES				1		

* Part No. 2194693KT Control includes Defrost Probe and Air Sensing Probe.

TABLE 2: REFRIGERATOR BASES, REAR VIEW (Sheet 2 of 2)

REF NO.	PART NUMBER	REFRIGERATOR BASE LENGTHS	60-inch (152.4 cm)		64-inch (162.6 cm)		72-inch (183 cm)	
		REFRIGERATOR BASE FRONT STYLE	2-Door	4-Drawer	2-Door	4-Drawer	3-Door	6-Drawer
		REFRIGERATOR BASE MODEL NUMBERS	4460N	D4460N	4464N	D4464N	4472N	D4472N
			ST4460N	STD4460N	ST4464N	STD4464N	ST4472N	STD4472N
			UC4460N	UCD4460N	UC4464N	UCD4464N	UC4472N	UCD4472N
		REPLACEMENT PART DESCRIPTION	REPLACEMENT PART QUANTITY REQUIRED FOR EACH OF THE ABOVE MODELS					
1*	2194763KT	CONTROL, DANFOSS, DUAL KIT	1	1	1	1	1	1
	2194763	TEMP CONTROL ONLY	1	1	1	1	1	1
	2194755	DEFROST PROBE	1	1	1	1	1	1
	2194765	DEFROST PROBE	1	1	1	1	1	1
	2194756	AIR SENSING PROBE	1	1	1	1	1	1
2	0052686	BRACKET, FAN MOTOR 9000, 4200	2	2	2	2	2	2
3	2162667	MOTOR, FAN, 115V/60HZ, 1450 RPM, CW	1	1	1	1	1	1
4	2162681	BLADE, FAN, 7" (17.8 cm), 40 DEGREE PITCH	1	1	1	1	1	1
5	3234147	CASTER, 2" (5 cm), PLT, SWIVEL, HARD RUBBER	3	3	3	3	3	3
6	3234148	CASTER, 2" (5 cm), PLT, SWIVEL, BRK, HD RUBBER	3	3	3	3	3	3
7	3526945	COMPRESSOR, 1/2 HP, R404A, 4460/64/72	1	1	1	1	1	1
8	3516286	FILTER-DRIER (2), 115 ID, R-404A	1	1	1	1	1	1
10	3516298	COIL, EVAPORATOR, 4400N	2	2	2	2	2	2
11	3516287	SWITCH, HIGH PRESSURE, 404A, 450	1	1	1	1	1	1
12	0074130	CAP TUBE, .049" (.12 cm) x 108" (274.3 cm)	2	2	2	2	2	2
See Fig. 5	000-B4Y-0030	DRAWER ASSEMBLY, 24" (61 cm), 4400 SERIES						3
See Fig. 5	000-B4Y-0032	DRAWER ASSEMBLY, 30" (76.2), 4400 SERIES		2				
See Fig. 5	000-B4Y-0033	DRAWER ASSEMBLY, 32" (81.3), 4400 SERIES				2		

* Part No. 2194763KT Control includes Defrost Probes (2) and Air Sensing Probe.

THIS PAGE INTENTIONALLY LEFT BLANK

FIGURE 3: SALAD TOP UNITS, CUTTING BOARDS

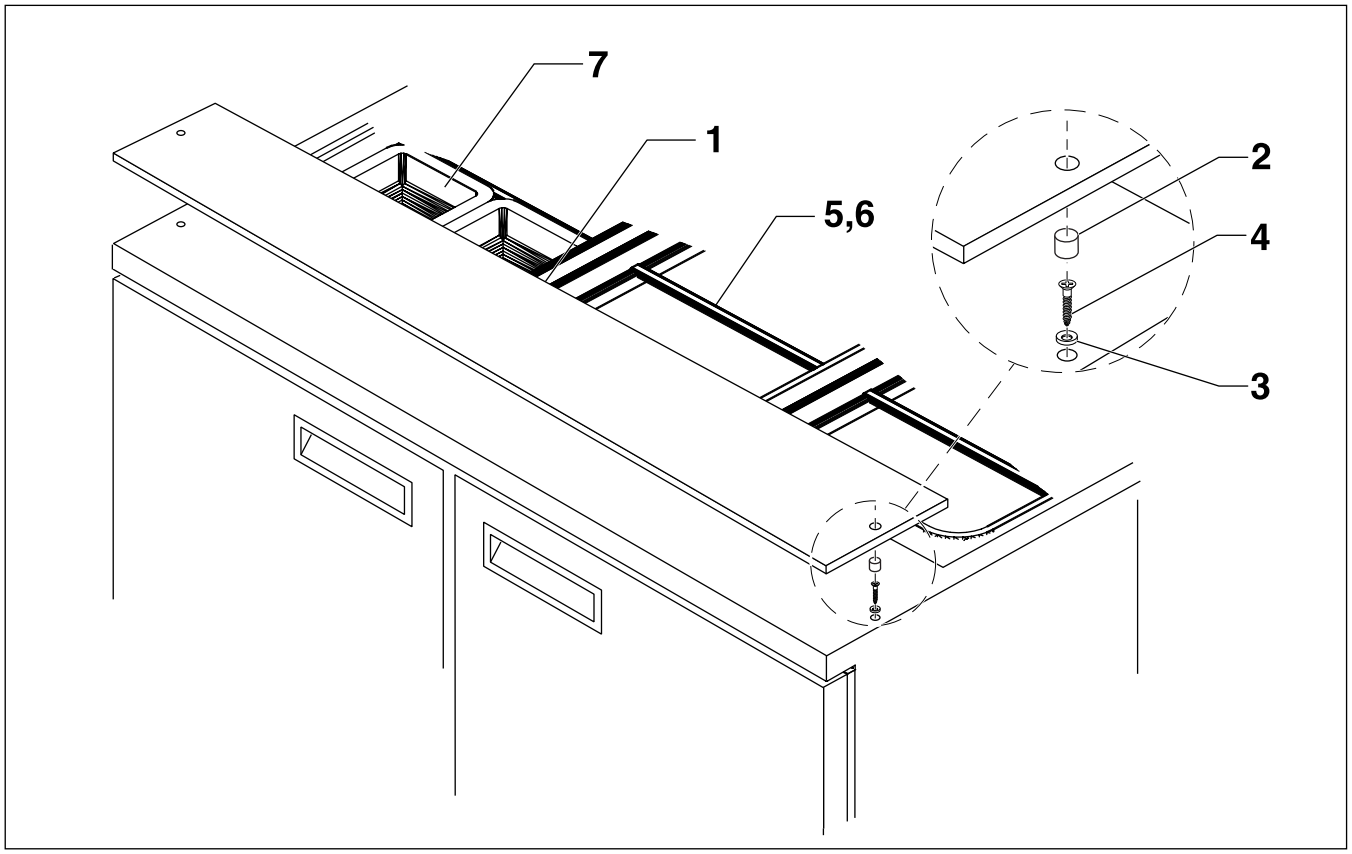

TABLE 3: SALAD TOP UNITS, CUTTING BOARDS

REF	PART	REFRIGERATOR BASE LENGTHS	27-inch		32-inch		48-inch	
		REFRIGERATOR BASE FRONT STYLE	1-Door	2-Drawer	1-Door	2-Drawer	2-Door	4-Drawer
		REFRIGERATOR BASE MODEL NUMBERS	4427N-6	D4427N-6	4432N-12	D4432N-12	4448N-8	D4448N-8
		REPLACEMENT PART DESCRIPTION	REPLACEMENT PART QUANTITY REQUIRED FOR EACH OF THE ABOVE MODELS					
1	1301458	BOARD, WHITE POLY, 1/2" x 10" x 27"	1	1				
	1301461	BOARD, WHITE POLY, 1/2" x 10" x 48"					1	1
	1301476	BOARD, SANALITE, 1/2" x 10" x 32"			1	1		
2	1701000	CAP, CUTTING BOARD PIN	2	2	2	2	2	2
3	3234360	FERRULE, BRASS, CUTTING BOARD	2	2	2	2	2	2
4	9321273	SCREW, #8 x 0.75", H-P-F8-AB	2	2	2	2	2	2
5	0077232	DIVIDER BAR, 12.15" x .90"						
6	0077507	DIVIDER BAR, 30.75" x .90"						
7	3234587	1/6 SIZE PAN, 4" DEEP, CLEAR						

REF NO.	PART NUMBER	REFRIGERATOR BASE LENGTHS	60-inch		64-inch		72-inch	
		REFRIGERATOR BASE FRONT STYLE	1-Door	2-Drawer	1-Door	2-Drawer	2-Door	4-Drawer
		REFRIGERATOR BASE MODEL NUMBERS	4460N-8	D4460N-8	4464N-8	D4464N-8		
			4460N-12	D4460N-12	4464N-12	D4464N-12	4472N-12	D4472N-12
					4464N-16	D4464N-16	4472N-18	D4472N-18
		REPLACEMENT PART DESCRIPTION	REPLACEMENT PART QUANTITY REQUIRED FOR EACH OF THE ABOVE MODELS					
1	1301460	BOARD, WHITE POLY, 1/2" X 10" x 64"			1	1		
	1301468	BOARD, SANALITE, 1/2" X 10" x 72"					1	1
	1301469	BOARD, SANALITE, 1/2" X 10" x 60"	1	1				
2	1701000	CAP, CUTTING BOARD PIN	2	2	2	2	2	2
3	3234360	FERRULE, BRASS, CUTTING BOARD	2	2	2	2	2	2
4	9321273	SCREW, #8 x 0.75, H-P-F8-AB	2	2	2	2	2	2
5	0077232	DIVIDER BAR, 12.15" x .90"						
6	0077507	DIVIDER BAR, 30.75" x .90"						
7	3234587	1/6 SIZE PAN, 4" DEEP, CLEAR						

FIGURE 4: MEGA TOP UNITS, CUTTING BOARDS

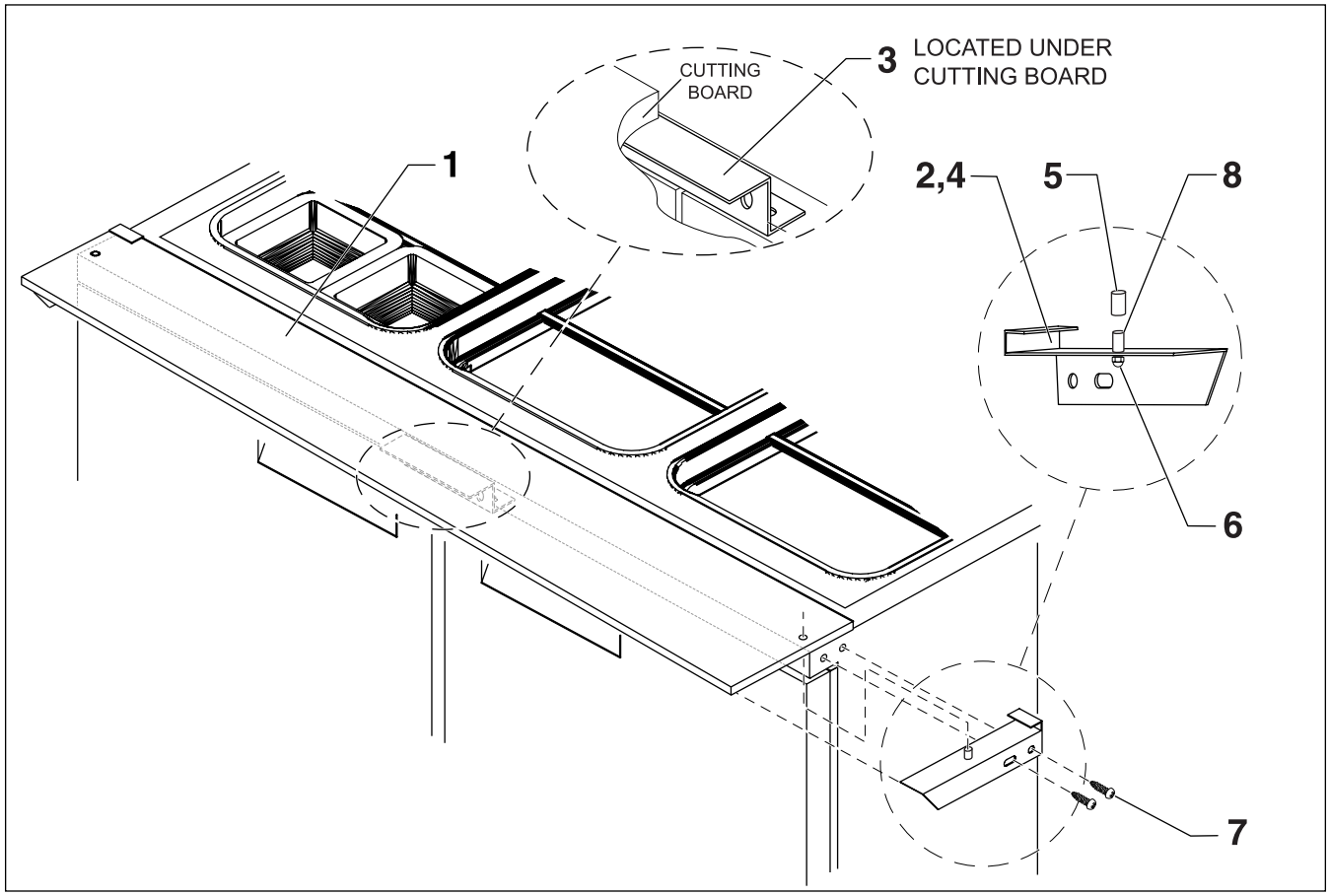

TABLE 4: MEGA TOP UNITS, CUTTING BOARDS

REF NO.	PART NUMBER	REFRIGERATOR BASE LENGTHS	27-inch (68.6 cm)		32-inch (81.3 cm)		48-inch (121.9cm)	
		REFRIGERATOR BASE FRONT STYLE	1-Door	2-Drawer	1-Door	2-Drawer	2-Door	4-Drawer
		REFRIGERATOR BASE MODEL NUMBERS	4427NM	D4427NM	4432NM	D4432NM	4448NM	D4448NM
		PART DESCRIPTION	REPLACEMENT PART QUANTITY REQUIRED FOR EACH OF THE ABOVE MODELS					
1	1301450	BOARD, WHITE POLY, 1/2" x 8" x 27" (1.3 x 20.3 x 68.6 cm)	1	1				
	1301451	BOARD, WHITE POLY, 1/2" x 8" x 48" (1.3 x 20.3 x 121.9 cm)					1	1
	1301457	BOARD, WHITE POLY, 1/2" x 8" x 32" (1.3 x 20.3 x 81.3 cm)			1	1		
2	0077510	BRACKET, 8" (20.3 cm) CUTTING BOARD, RT 4400	1	1	1	1	1	1
4	0077801	BRACKET, 8" (20.3 cm) CUTTING BOARD, LT, 4400	1	1	1	1	1	1
5	1701000	CAP, CUTTING BOARD PIN	2	2	2	2	2	2
6	9321003	NUT, 1/4-20, ACORN, SS	2	2	2	2	2	2
7	9321072	SCREW, #8 x 0.75, H-P-F8-AB	4	4	4	4	4	4
8	9321103	PIN, CAP, SCREW, DR HINGE, 400/4000	2	2	2	2	2	2

REF NO.	PART NUMBER	REFRIGERATOR BASE LENGTHS	60-inch (152.4 cm)		64-inch (162.6 cm)		72-inch (183 cm)	
		REFRIGERATOR BASE FRONT STYLE	1-Door	2-Drawer	1-Door	2-Drawer	2-Door	4-Drawer
		REFRIGERATOR BASE MODEL NUMBERS	4460N-18M	D4460N-18M	4464N-18M	D4464N-18M	4472N-24M	D4472N-24M
			4460N-24M	D4460N-24M	4464N-24M	D4464N-24M	4472N-30M	D4472N-30M
		PART DESCRIPTION	REPLACEMENT PART QUANTITY REQUIRED FOR EACH OF THE ABOVE MODELS					
1	1301452	BOARD, WHITE POLY, 1/2" x 8" x 64" (1.3 x 20.3 x 162.6 cm)			1	1		
	1301459	BOARD, WHITE POLY, 1/2" x 8" x 60" (1.3 x 20.3 x 152.4 cm)	1	1				
	1301467	BOARD, SANALITE, 1/2" x 8" x 72" (1.3 x 20.3 x 183 cm), 4400					1	1
2	0077510	BRACKET, 8" (20.3 cm) CUTTING BOARD, RT, 4400	1	1	1	1	1	1
3	0077678	BRACKET, CUTTING BOARD, 4400N-M	1	1	1	1	1	1
4	0077801	BRACKET, 8" (20.3 cm) CUTTING BOARD, LT, 4400	1	1	1	1	1	1
5	1701000	CAP, CUTTING BOARD PIN	2	2	2	2	2	2
6	9321003	NUT, 1/4-20, ACORN, SS	2	2	2	2	2	2
7	9321072	SCREW, #8 x 0.75, H-P-F8-AB	8	8	8	8	8	8
8	9321103	PIN, CAP, SCREW, DR HINGE, 400/4000	2	2	2	2	2	2

FIGURE 5: DRAWER ASSEMBLIES

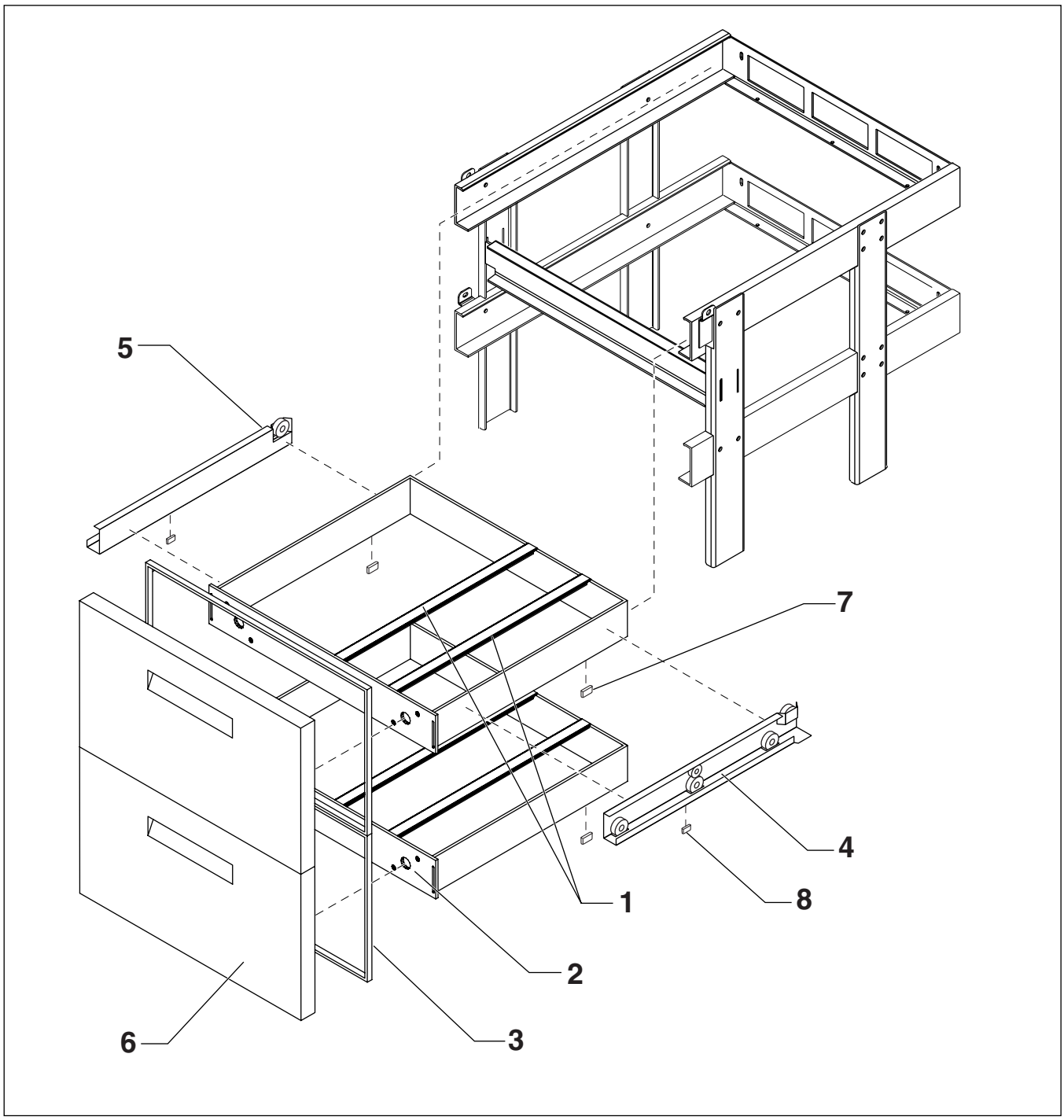

TABLE 5: DRAWER ASSEMBLIES REPLACEABLE PARTS

KEY NO.	PART NO.	PART DESCRIPTION	24-inch (61 cm) Drawer Assy.	27-inch (68.6 cm) Drawer Assy.	30-inch (76.2 cm) Drawer Assy.	32-inch (81.3 cm) Drawer Assy.
1	118-APT-0033	BAR, DIVIDER, DRAWER 20.5" (52 cm), 4400		4	4	2
	118-APT-0036	DIV, BAR, 20.5" (52 cm), 1.4" (3.6 cm) WIDE, 4400DRW	2			
2	000-333-003J	BOX, DRAWER, 32" (81.3 cm), 4432/64				2
	000-333-003K	BOX, DRAWER, 30" (76.2 cm), 4460			2	
	000-333-003L	BOX, DRAWER, 27" (68.6 cm), 4400N		2		
	000-333-003M	BOX, DRAWER, 24" (61 cm), 4448/72	2			
3	1702522	GASKET, DRAWER, 4432N, 2 HIGH				2
	1702524	GASKET, DRAWER, 4427N, 2 HIGH		2		
	1702541	GASKET, DRAWER, 4448N, 2 HIGH	2			
	1702542	GASKET, DRAWER, 4460N, 2 HIGH			2	
4	3234509	DRAWER SLIDE, RIGHT, 27" (68.6 cm) DRAWERS		2		
	3234492	DRAWER SLIDE, RIGHT, 24" (61 cm), 30" (76.2 cm), 32" (81.3 cm) DRAWERS	2		2	2
5	3234517	DRAWER SLIDE, LEFT 27" (68.6 cm) DRAWERS		2		
	3234504	DRAWER SLIDE, LEFT, 24" (61 cm), 30" (76.2 cm), 32" (81.3 cm) DRAWERS	2		2	2
6	000-C16-0030	FRONT, DRAWER BOX, 24" (61 cm), 4400N	2			
	000-C16-0031	FRONT, DRAWER BOX, 27" (68.6 cm), 4400N		2		
	000-C16-0032	FRONT, DRAWER BOX, 30" (76.2 cm), 4430			2	
	000-C16-0033	FRONT, DRAWER BOX, 32" (81.3 cm), 4432/64				2
7	9321620	BLUE SLEEVE, DRAWER BOX	2	2	2	2
8	9321621	WHITE SLEEVE, DRAWER CARTRIDGE	2	2	2	2

FIGURE 6: CASTER AND LEGS

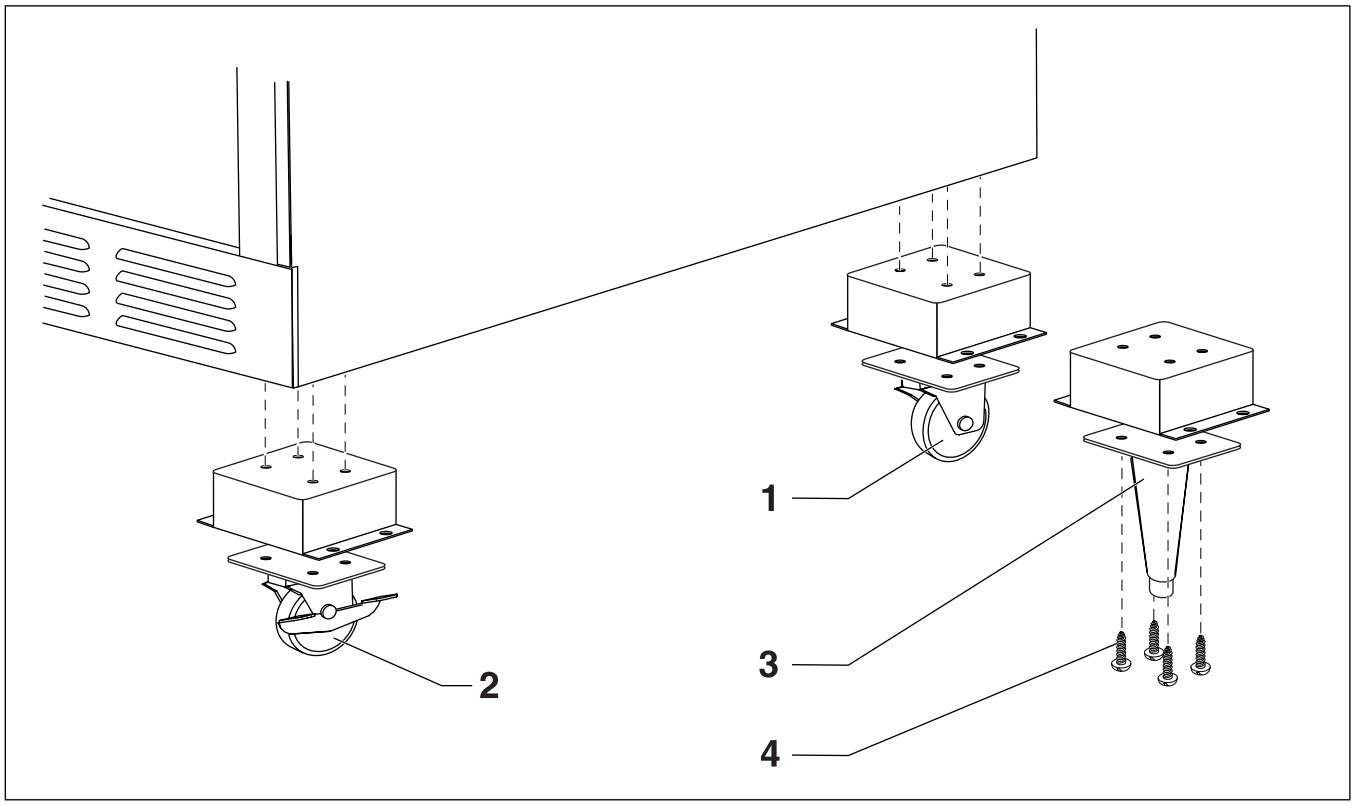

TABLE 6: CASTER AND LEGS

REF NO.	PART NO.	PART DESCRIPTION
1	3234147	2" (5 cm) CASTER WITHOUT LOCK
2	3234148	2" (5 cm) CASTER WITH LOCK
	3234795	CASTER ONLY FOR CASTER BOX INSTALLATION
	3234025	3" (7.6 cm) CASTER, 3.75" (9.5 cm) LOAD HEIGHT (OPTIONAL)
	3234161	5" (12.7 cm) CASTER, 6.25" (15.9 cm) LOAD HEIGHT (OPTIONAL)
3	3234791	LEG – 6" (15.2 cm) MIN. – 7" (17.8 cm) MAX. HEIGHT (OPTIONAL)
	000-AXD-004F	CASTER, 2" (5 cm), UC UNITS W/CASTER BOX, 2.5" (6.4 cm) OVERALL HEIGHT – 4 PIECES
4	9321470	MOUNTING SCREW

SPARES FOR TELESCOPING COVERS

PART NO.	PART DESCRIPTION	27" (68.6 cm)	32" (81.3 cm)	48" (121.9 cm)	60" (152.4 cm)	64" (162.6 cm)	72" (183 cm)
One Part Required for Each Model Number Below							
000-B59-003H	TELESCOPING COVERS-6	4427N-6					
		D4427N-6				4464N-12	4472N-12
		4427N-6DHL				D4464N-12	D4472N-12
000-B59-003K	TELESCOPING COVERS-6M						4472-30M
							D4472N-30M
000-B59-003M	TELESCOPING COVERS-8			4448N-8	4460N-8	4464N-8	
				D4448N-8	D4460N-8	D4464N-8	
000-B59-003N	TELESCOPING COVERS-9	4427N-9M					
		4427N-9MDHL					
		D4427N-9M					
000-B59-003P	TELESCOPING COVERS-12M		4432N-12M				
			D4432N-12M		4460N-12M	4464N-12M	
			4432N-12MDHL		D4460N-12M	D4464N-12M	
000-B59-003T	TELESCOPING COVERS-18M			4448N-18M	4460N-18M	4464N-18	4472N-18M
				D4448N-18M	D4460N-18M	D4464N-18M	D4472N-18M
Two Parts Required for Each Model Number Below							
000-B59-003H	TELESCOPING COVERS-6	4427N		4448N-12	4460N-12		
				D4448N-12	D4460N-12		
000-B59-003M	TELESCOPING COVERS-8					4464N-16	
						D4464N-16	
000-B59-003P	TELESCOPING COVERS-12M					4464N-24M	4472N-24M
						D4464N-24M	D4472N-24M
000-B59-003R	TELESCOPING COVERS-12M				4460N-24M		4472N-30M
Three Parts Required for Each Model Number Below							
000-B59-003H	TELESCOPING COVERS-6						4472N-18
							D4472N-18
000-B59-003R	TELESCOPING COVERS-12M				D4460N-24M		

TELESCOPING COVERS REPLACEABLE PARTS

REF	PART NO.	PART DESCRIPTION
1	3234110	HANDLE, LIFT COVER, CHROME, 4"
2	9321170	SCREW, #10-32 x 0.50, A-Z/S-KN
3	9321250	SCREW, #6-32 x 0.25, S-P-TR-M
4	9321251	NUT, SS, #WWZ11188



Delfield 980 S. Isabella Rd., Mt. Pleasant, MI 48858
(989) 773-7981 or (800) 733-8829 • Fax (989) 773-3210
www.delfield.com

June 2006