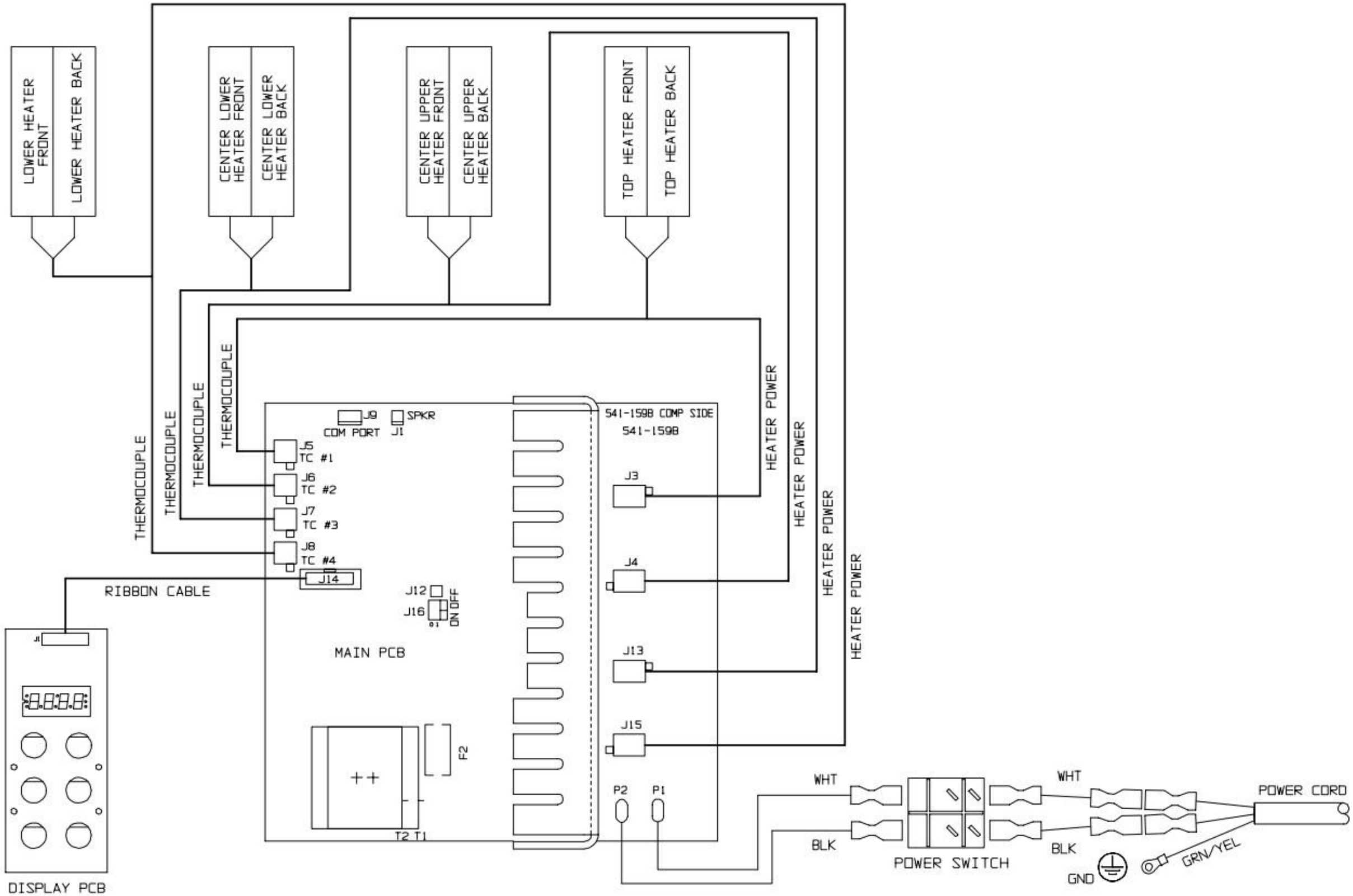
LOWER HEATER FRONT
LOWER HEATER BACK
CENTER LOWER HEATER FRONT
CENTER LOWER HEATER BACK
CENTER UPPER HEATER FRONT
CENTER UPPER HEATER BACK
TOP HEATER FRONT
TOP HEATER BACK
THERMOCOUPLE
THERMOCOUPLE
THERMOCOUPLE
THERMOCOUPLE
HEATER POWER
HEATER POWER
HEATER POWER
HEATER POWER
J9
COM PORT
J1
SPKR
541-1598 COMP SIDE
541-1598
J5
TC #1
J6
TC #2
J7
TC #3
J8
TC #4
J14
RIBBON CABLE
J12
J16
ON OFF
MAIN PCB
J3
J4
J13
J15
F2
T2 T1
P2
P1
WHT
BLK
POWER SWITCH
WHT
BLK
GND
GRN/YEL
POWER CORD
J1
DISPLAY PCB