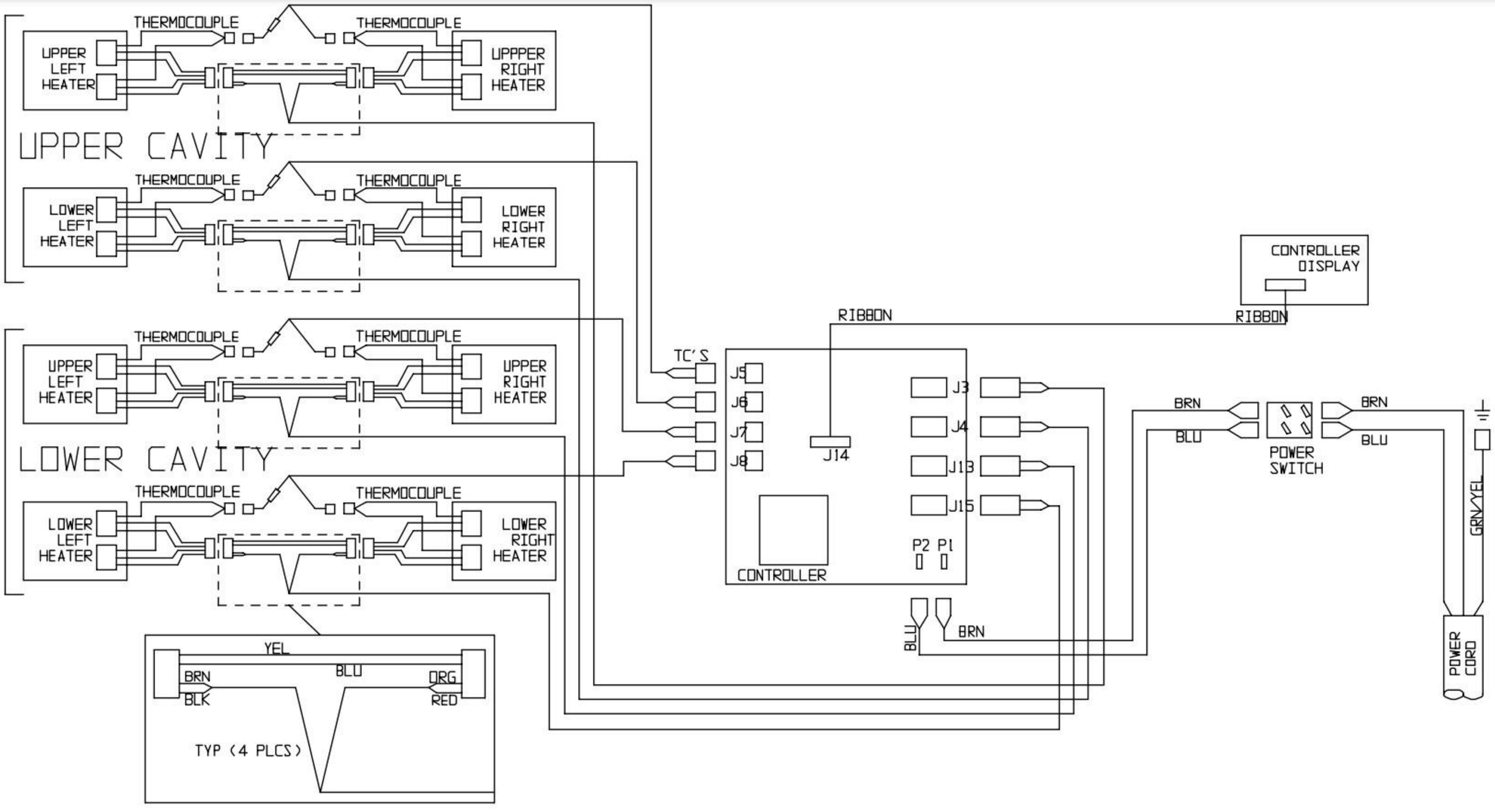
THERMOCOUPLE
THERMOCOUPLE
UPPER LEFT HEATER
UPPPER RIGHT HEATER
UPPER CAVITY
THERMOCOUPLE
THERMOCOUPLE
LOWER LEFT HEATER
LOWER RIGHT HEATER
THERMOCOUPLE
THERMOCOUPLE
UPPER LEFT HEATER
UPPER RIGHT HEATER
LOWER CAVITY
THERMOCOUPLE
THERMOCOUPLE
LOWER LEFT HEATER
LOWER RIGHT HEATER
YEL
BRN
BLU
ORG
BLK
RED
TYP (4 PLCS)
TC'S
J5
J6
J7
J8
J14
J3
J4
J13
J15
P2 P1
CONTROLLER
RIBBON
CONTROLLER DISPLAY
RIBBON
BLU
BRN
BRN
BLU
POWER SWITCH
BRN
BLU
GRN/YEL
POWER CORD