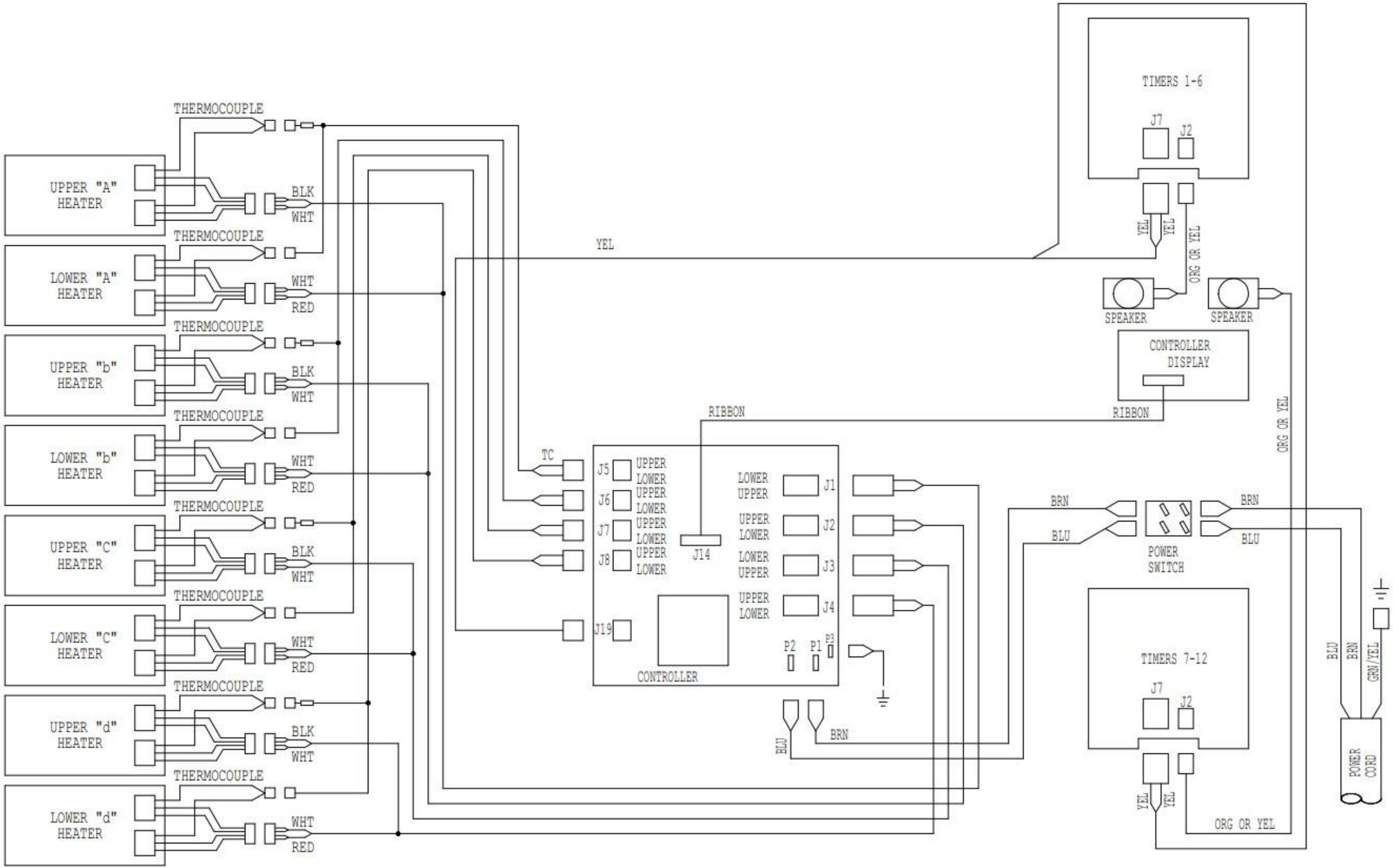
THERMOCOUPLE
UPPER "A" HEATER
BLK
WHT
LOWER "A" HEATER
WHT
RED
UPPER "b" HEATER
LOWER "b" HEATER
UPPER "C" HEATER
LOWER "C" HEATER
UPPER "d" HEATER
LOWER "d" HEATER
YEL
TIMERS 1-6
J7
J2
ORG OR YEL
SPEAKER
CONTROLLER DISPLAY
RIBBON
TC
J5
J6
J8
J19
UPPER
LOWER
J14
J1
J2
J3
J4
P2
P1
P3
CONTROLLER
BLU
BRN
POWER SWITCH
TIMERS 7-12
GRN/YEL
POWER CORD

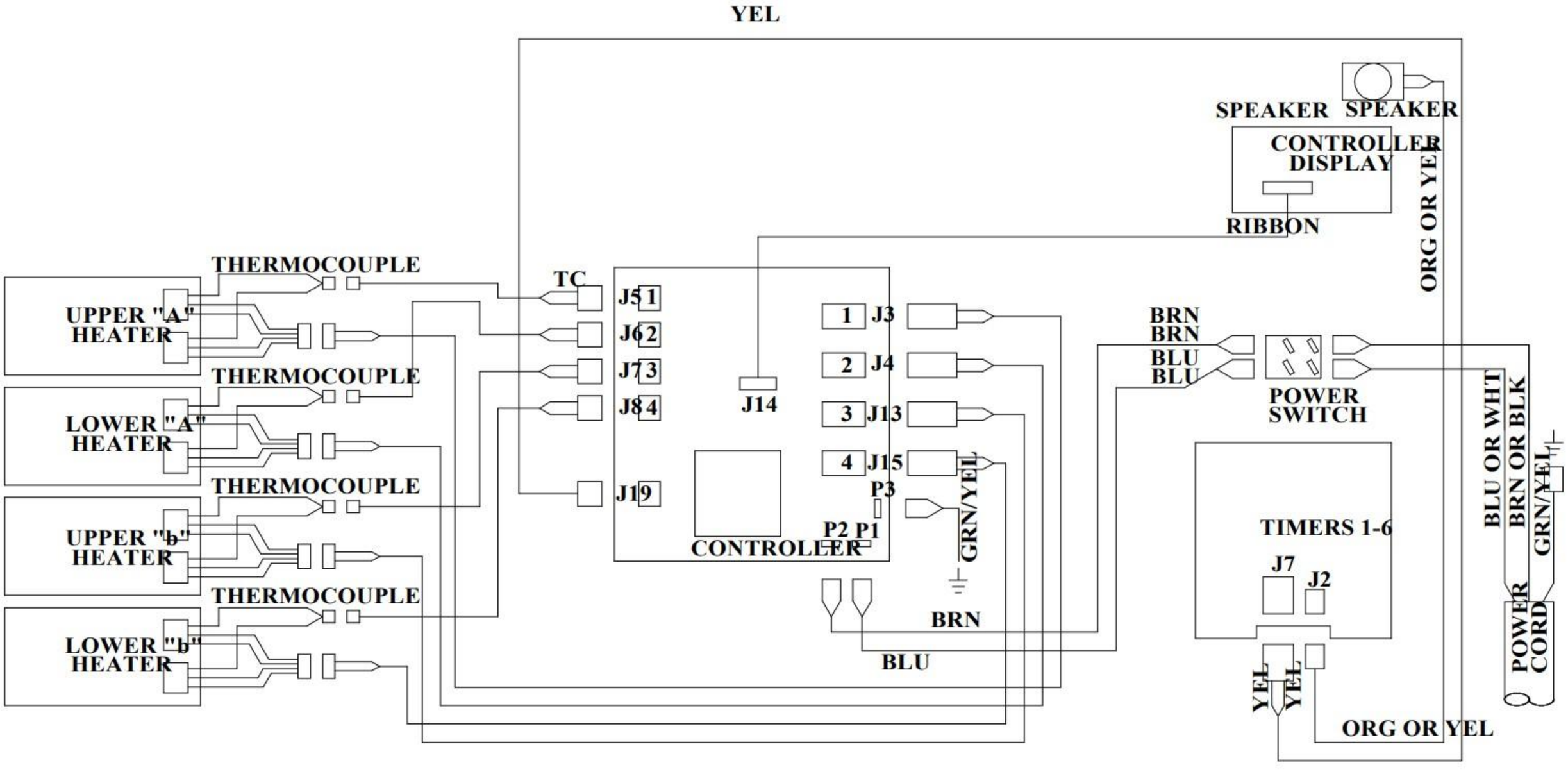
YEL
SPEAKER
SPEAKER
CONTROLLER DISPLAY
RIBBON
ORG OR YEL
THERMOCOUPLE
UPPER "A" HEATER
THERMOCOUPLE
LOWER "A" HEATER
THERMOCOUPLE
UPPER "b" HEATER
THERMOCOUPLE
LOWER "b" HEATER
TC
J5 1
J6 2
J7 3
J8 4
J19
J14
1 J3
2 J4
3 J13
4 J15
P3
P2 P1
CONTROLLER
GRN/YEL
BRN
BLU
BRN
BRN
BLU
BLU
POWER SWITCH
TIMERS 1-6
J7
J2
YEL
YEL
ORG OR YEL
BLU OR WHT
BRN OR BLK
GRN/YEL
POWER CORD