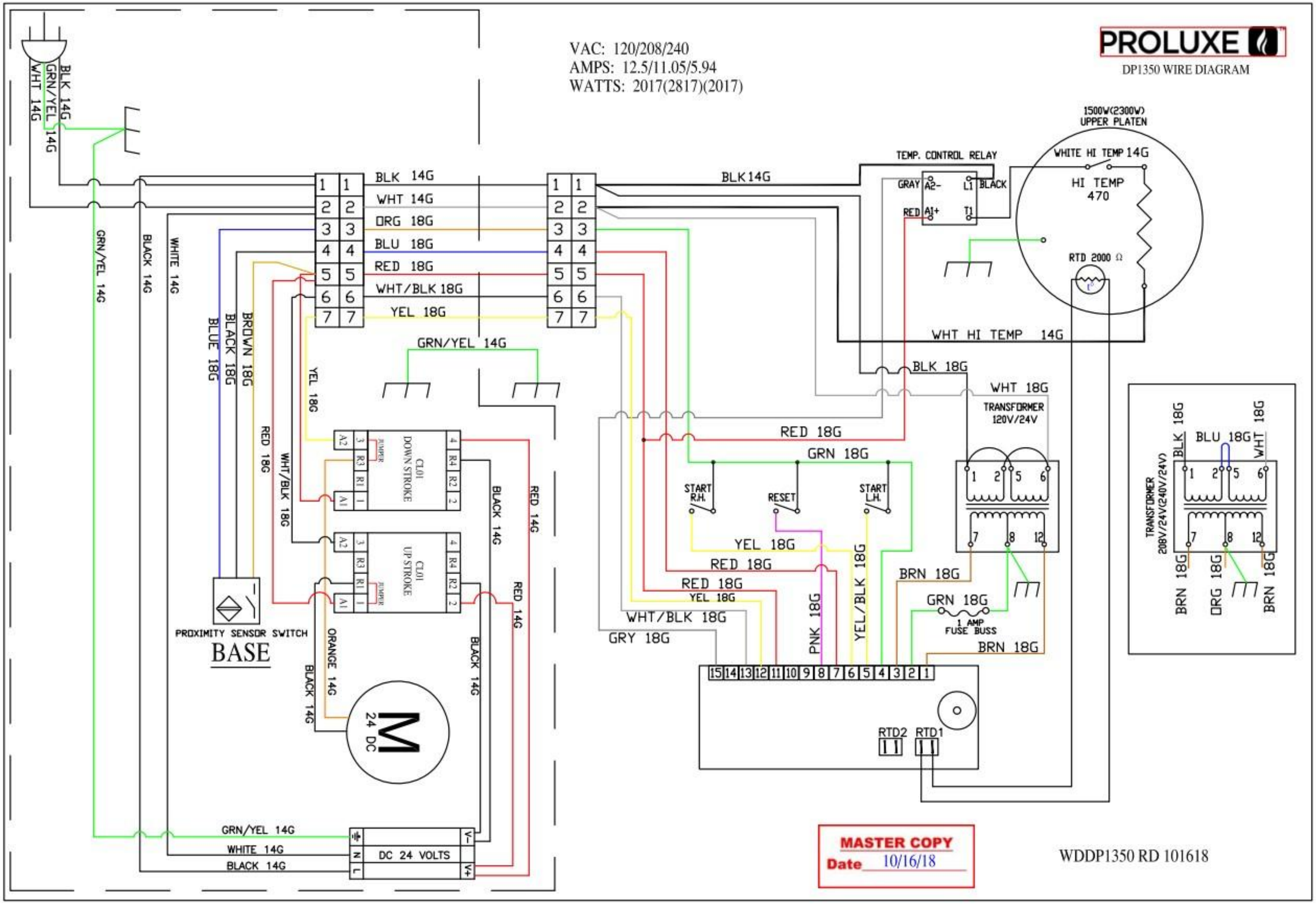
PROLUXE
DP1350 WIRE DIAGRAM
VAC: 120/208/240
AMPS: 12.5/11.05/5.94
WATTS: 2017(2817)(2017)
BLK 14G
GRN/YEL 14G
WHT 14G
BLK 14G
WHT 14G
ORG 18G
BLU 18G
RED 18G
WHT/BLK 18G
YEL 18G
GRN/YEL 14G
BLUE 18G
BLACK 18G
BROWN 18G
YEL 18G
RED 18G
WHT/BLK 18G
CL01 DOWN STROKE
CL01 UP STROKE
JUMPER
BLACK 14G
RED 14G
PROXIMITY SENSOR SWITCH
BASE
ORANGE 14G
24 DC
GRN/YEL 14G
WHITE 14G
BLACK 14G
DC 24 VOLTS
V-
V+
N
L
BLK 14G
TEMP. CONTROL RELAY
GRAY A2-
L1 BLACK
RED A1+
T1
1500W(2300W)
UPPER PLATEN
WHITE HI TEMP 14G
HI TEMP
470
RTD 2000 Ω
WHT HI TEMP 14G
BLK 18G
WHT 18G
TRANSFORMER
120V/24V
RED 18G
GRN 18G
START R.H.
RESET
START L.H.
YEL 18G
RED 18G
RED 18G
YEL 18G
WHT/BLK 18G
GRY 18G
PNK 18G
YEL/BLK 18G
BRN 18G
GRN 18G
1 AMP
FUSE BUSS
BRN 18G
15 14 13 12 11 10 9 8 7 6 5 4 3 2 1
RTD2
RTD1
TRANSFORMER
208V/24V(240V/24V)
BLK 18G
BLU 18G
WHT 18G
BRN 18G
ORG 18G
BRN 18G
MASTER COPY
Date 10/16/18
WDDP1350 RD 101618