READ AND SAVE THESE INSTRUCTIONS

VAPORMIST®

Electric-to-Steam Humidifier

Installation, Operation, and Maintenance Manual

driSteem™

Warnings and cautions

⚠ WARNING	CAUTION
Indicates a hazardous situation that could result in death or serious injury if instructions are not followed.	Indicates a hazardous situation that could result in damage to or destruction of property if instructions are not followed.

mc_051508_1145

⚠ WARNING

Attention installer
Read this manual before installing, and leave this manual with product owner. This product must be installed by qualified HVAC and electrical contractors and in compliance with local, state, federal, and governing codes. Improper installation can cause property damage, severe personal injury, or death as a result of electric shock, burns, or fire.

DriSteem Technical Support: 800-328-4447

Read all warnings and instructions
Read this manual before performing service or maintenance procedures on any part of the system. Failure to follow all warnings and instructions could produce the hazardous situations described, resulting in property damage, personal injury, or death.

Failure to follow the instructions in this manual can cause moisture to accumulate, which can cause bacteria and mold growth or dripping water into building spaces. Dripping water can cause property damage; bacteria and mold growth can cause illness.

mc_011909_1215

Hot surfaces and hot water
This steam humidification system has extremely hot surfaces. Water in tanks, steam pipes, and dispersion assemblies can be as hot as 212 °F (100 °C). Discharged steam is not visible. Contact with hot surfaces, discharged hot water, or air into which steam has been discharged can cause severe personal injury. To avoid severe burns, follow the cool-down procedure in this manual before performing service or maintenance procedures on any part of the system.

mc_011909_1130

Warnings and cautions

WARNING

Disconnect electrical power

Disconnect electrical power before installing supply wiring or performing service or maintenance procedures on any part of the humidification system. Failure to disconnect electrical power could result in fire, electrical shock, and other hazardous conditions. These hazardous conditions could cause property damage, personal injury, or death.

Contact with energized circuits can cause property damage, severe personal injury, or death as a result of electrical shock or fire. Do not remove humidifier electrical panel cover, heater terminal cover, or subpanel access panels until electrical power is disconnected.

Follow the shutdown procedure in this manual before performing service or maintenance procedures on any part of the system.

mc_052410_1510

Electric shock hazard

If the humidifier starts up responding to a call for humidity during maintenance, severe bodily injury or death from electric shock could occur. To prevent such start-up, follow the procedure below before performing service or maintenance procedures on this humidifier (after the tank has cooled down and drained):

1. Use Vapor-logic® keypad/display to change control mode to Standby.
2. Shut off all electrical power to humidifier using field-installed fused disconnect, and lock all power disconnect switches in OFF position.
3. Close field-installed manual water supply shut-off valve.

mc_050808_1540

CAUTION

Hot discharge water

Discharge water can be as hot as 212 °F (100 °C) and can damage the drain plumbing.

To prevent such damage from humidifiers without water tempering, allow the tank to cool before draining.

Humidifiers equipped with a water tempering device such as a DriSteem Drane-kooler need fresh make-up water in order to function properly. Make sure the water supply to the water tempering device remains open during draining.

Excessive supply water pressure

Supply water pressure greater than 80 psi (550 kPa) can cause the humidifier to overflow.

mc_030910_1440

Table of contents

ATTENTION INSTALLER
Read this manual before installing.
Leave manual with product owner.

DriSteem® Technical Support
800-328-4447

WHERE TO FIND MORE INFORMATION

Our web site:

The following documents are available on our web site: www.dristeem.com

- Catalogs
  - Vapormist
  - Ultra-sorb®
- Installation, Operation, and Maintenance manuals (IOM)
  - Ultra-sorb
  - Vapor-logic controller (includes humidifier operation and troubleshooting)
- DriSteem Humidification System Design Guide (includes steam loss tables and general humidification information)

DriCalc®:

DriCalc, our software for humidification system sizing and selection, can be ordered at our web site. Also in DriCalc:

- Library of installation guides
- Dispersion and sensor placement in ducts and air handlers
- Vertical airflows

Call us at 800-328-4447

Obtaining documents from our web site or from DriCalc is the quickest way to view our literature, or we will be happy to mail literature to you.

WARNINGS AND CAUTIONS ii

OVERVIEW
Product overview 2

SPECIFICATIONS
Capacities, electrical specifications, and weights 4
Dimensions 5
Dispersion options 6
Selecting a location 7

INSTALLATION
Mounting 8
Piping
Tap/softened water 10
RO/DI water option 11
Supply water and drain piping 12
Drane-kooler 13
Wiring 14
Sensor placement 16
Dispersion
Selecting the dispersion assembly location 18
Interconnecting piping requirements 19
Drip tee installation 21
SDU-I and SDU-E 22
Single dispersion tube 28
Rapid-sorb 30
Ultra-sorb 36

Table of contents

OPERATION
Principle of operation 37
Start-up checklist 38
Start-up procedure 39

MAINTENANCE
Tap/softened water 40
RO/DI water option 44

REPLACEMENT PARTS
Humidifier 46
SDU-E 48
SDU-I 49
Subpanel 50

WARRANTY . . . . . Back cover

Keypad/display and troubleshooting

The *Vapor-logic Installation and Operation Manual*, which was shipped with your humidifier, is a comprehensive operation manual. Refer to it for information about using the keypad/display and Web interface, and for troubleshooting information.

Download DriSteem literature

Most DriSteem product manuals can be downloaded, printed, and ordered from our web site: www.dristeem.com

mc_052410_1335

Product overview

Vapormist humidifiers use heat caused by electrical resistance in submerged heating elements boil fill water into humidification steam. Water level is controlled by means of conductivity probes or a float valve, depending on the water type.

FIGURE 2-1: VAPORMIST HUMIDIFIER

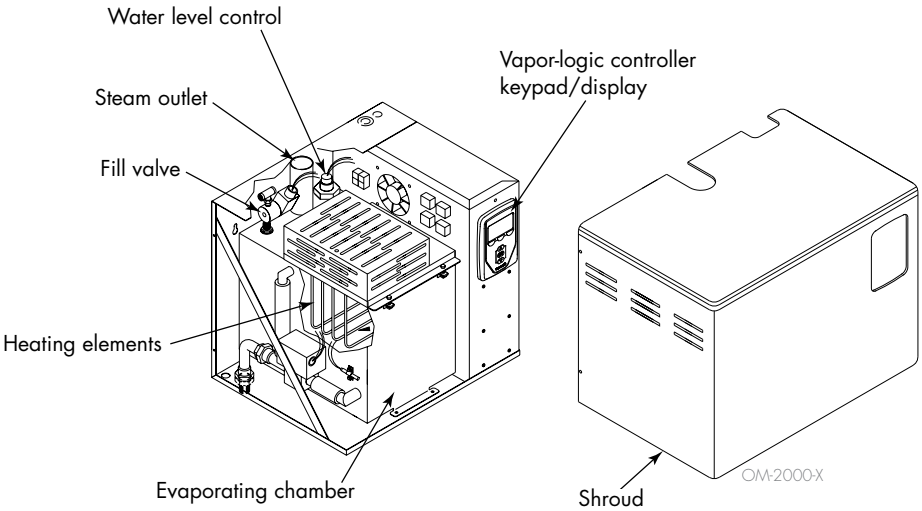

TAP/SOFTENED WATER

Tap/softened water Vapormist humidifiers (shown above) use conductivity probes to monitor the water level. See Figure 3-2. Water conductivity must be at least 30 µS/cm for proper operation. Vapormist humidifiers for tap or softened fill water will not operate with RO/DI water. For RO/DI water, use Vapormist with the RO/DI water option.

RO/DI WATER OPTION

Vapormist humidifiers with the RO/DI water option (deionized water or water that has been treated using reverse osmosis) control water level with a float valve and low water cutoff switch. See Figure 3-3. Float valves are compatible with RO/DI water only.

Humidifiers with the RO/DI water option are virtually maintenance free and require little or no downtime.

WATER TYPE CONVERSION

Vapormist humidifiers can be converted in the field for use with tap/softened water or RO/DI water. Contact your DriSteem representative or distributor for parts and instructions.

mc_061610_1640-VM

Supply water guidelines

Supply water quality is an important component of humidifier reliability and maintenance.

Examples:

- Corrosive water can decrease the service life of the humidifier.
- Excessive water hardness can increase the humidifier maintenance requirements.

To maximize humidifier service life and minimize humidifier maintenance, DriSteem has established guidelines for supply water See Table 2-1.

Table 2-1: DriSteem supply water guidelines

Total hardness	0 to 500 ppm
Chlorides*	
RO or DI water	< 5 ppm
Softened water	< 25 ppm
Tap water	< 50 ppm
* Damage caused by chloride corrosion is not covered by your DriSteem warranty.	
pH	
RO, DI, or softened water	7 to 8
Tap water	6.5 to 8.5
Silica	< 15 ppm
You may wish to take action to mitigate potential negative effects to your humidifier. Supply water outside of these guidelines may void your DriSteem warranty. Please contact your DriSteem Representative or DriSteem Technical Support if you need advice.	

Product overview

CONTROLLER

The Vapor-logic controller in Vapormist humidifiers provides menus for all humidifier functions, with a Web interface for Ethernet access (see Figure 3-1).

The Vapor-logic Installation and Operation Manual ships with Vapormist humidifiers. Refer to it for information on using the keypad/display and Web interface, and for troubleshooting information.

FIGURE 3-1: VAPOR-LOGIC KEYPAD/DISPLAY AND WEB INTERFACE

KEYPAD/DISPLAY

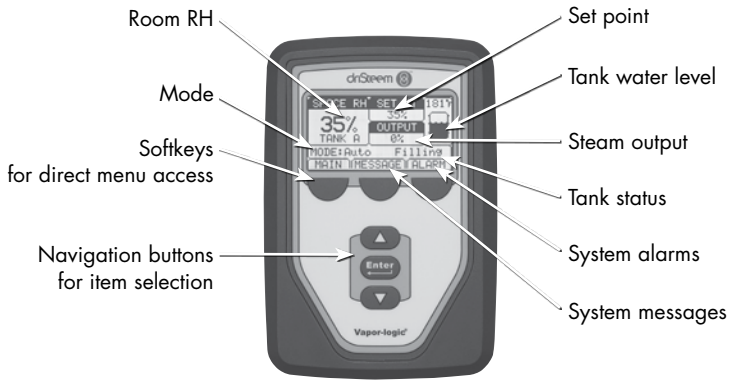

WEB INTERFACE

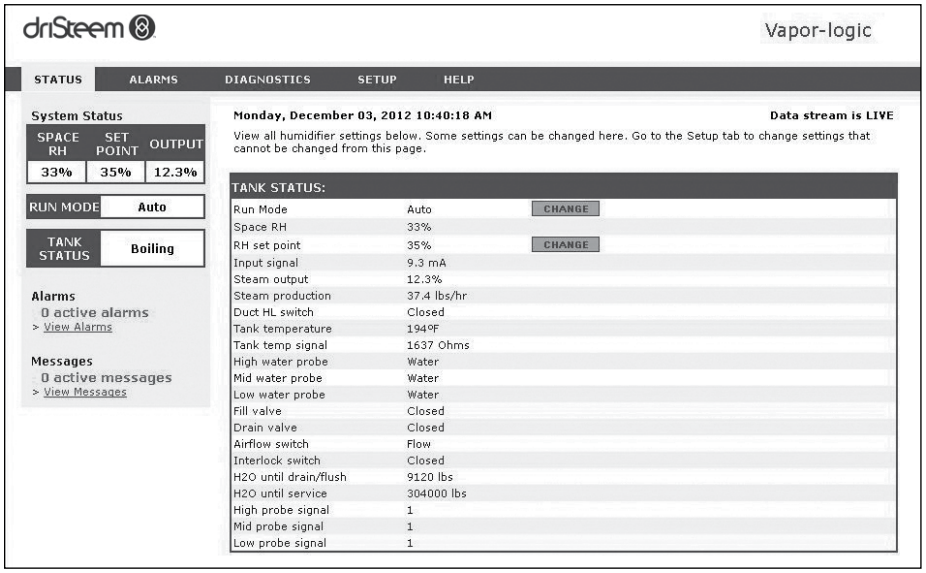

Notes:

See Pages 10 and 11 for detailed installation drawings.

FIGURE 3-2: WATER LEVEL CONTROL FOR TAP/SOFTENED WATER HUMIDIFIER

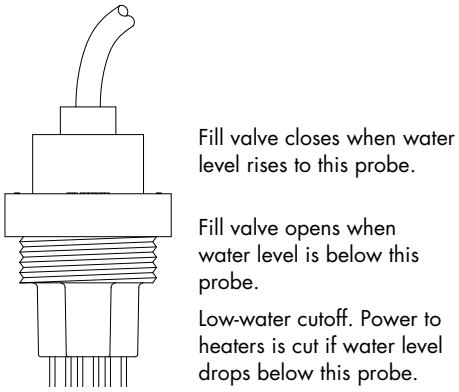

Humidifiers using tap or softened water control water levels electronically using a three-rod probe. The controller responds with the above actions when the water level reaches each rod.

mc_030910_1335 VLC-OM-030

FIGURE 3-3: WATER LEVEL CONTROL FOR RO/DI WATER OPTION HUMIDIFIER

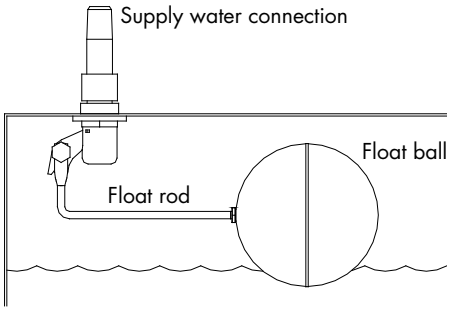

Humidifiers using RO/DI water control water levels using a float valve and low-water cutoff switch.

mc_052710_1644 OM-7396

Capacities, electrical specifications, and weights

Table 4-1:
Vapormist capacities, electrical specifications, and weights

VM model	Maximum steam capacity		Current draw (amps)										Weights ‡			
			Single-phase						Three-phase				Shipping		Operating	
kW	lbs/hr	kg/h	120V	208V*	240V*	277V	480V†	600V†	208V*	240V†	480V†	600V†	lbs	kg	lbs	kg
2	6	2.7	16.7	9.6	8.3	7.2	4.2	3.3	—	—	—	—	80	36	95	43
4	12	5.4	33.3	19.2	16.7	14.4	8.3	6.7	16.7**	14.4**	7.2**	5.8**	80	36	95	43
6	18	8.2	—	28.8	25.0	21.7	12.5	10.0	25.0**	21.7**	10.8**	8.7**	88	40	122	55
8	24	10.9	—	38.5	33.3	28.9	16.7	13.3	33.3**	28.9**	14.4**	11.5**	88	40	122	55
10	30	13.6	—	—	41.7	36.1	20.8	16.7	29.1**	25.3**	12.6**	10.1**	93	42	139	63
12	36	16.3	—	—	—	43.3	25.0	20.0	33.3	28.9	14.4	11.5	93	42	139	63
14	42	19.1	—	—	—	—	29.2	23.3	38.9	33.7	16.8	13.5	93	42	139	63
16	48	21.8	—	—	—	—	33.3	26.7	44.4	38.5	19.2	15.4	93	42	139	63
21	63	28.6	—	—	—	—	43.8	35.0	—	—	25.3	20.2	95	43	152	69
25	75	34.0	—	—	—	—	—	41.7	—	—	30.1	24.1	95	43	152	69
30	90	40.9	—	—	—	—	—	—	—	—	36.1	28.9	101	46	156	71
34	102	46.3	—	—	—	—	—	—	—	—	40.9	32.7	101	46	156	71

* On 208V/240V/single-phase/three-wire and on 208V/three-phase/four-wire supplies, the neutral line provides a separate 120V circuit for the SDU fan unit.
** For wire sizing, the highest leg draw is shown due to current imbalance.
† Add the following to Vapormist weights if using an SDU option (these weights are for additional control components housed within the Vapormist cabinet):
– SDU-I: 12 lbs (5.5 kg) (SDU-I operating weight is 58 lbs [26 kg])
– SDU-E: 9 lbs (4 kg) (SDU-E operating weight is 51 lbs [23 kg]))
‡ Add the following if using the SSR option:
– For single-phase or three-phase models drawing less than 32.7 amps, add 2 lbs (1 kg)
– For three-phase models drawing more than 32.7 amps, add 4 lbs (2 kg)
All Vapormist models operate at 50/60 Hz.

mc_042610_0900

Table 4-2:
Steam connection sizes

VM model	Steam outlet
2, 4, 6, 8	1½" hose or NPT connection
10*, 12*, 14* ,16*	1½" or 2" hose or NPT connection
21, 25, 30, 34	2" hose or NPT connection

* If using with an SDU-E (Space Dispersion Unit External Absorption), the Vapormist steam outlet must be 2" to match the SDU-E steam inlet.

mc_052410_1705-VM

FIGURE 4-1: STEAM OUTLET CONNECTIONS

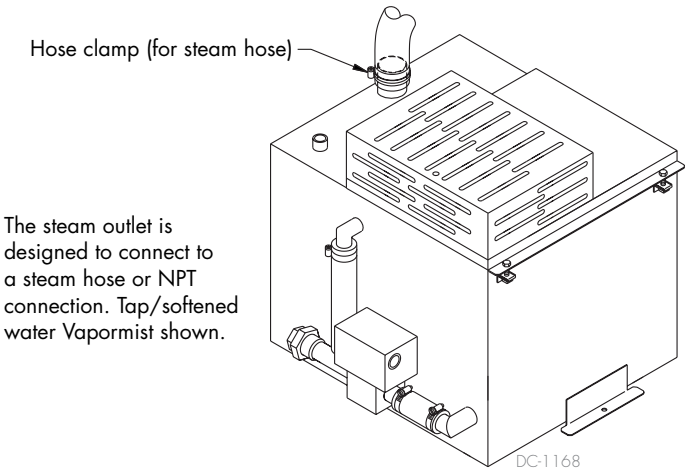

Dimensions

FIGURE 5-1: VAPORMIST DIMENSIONS

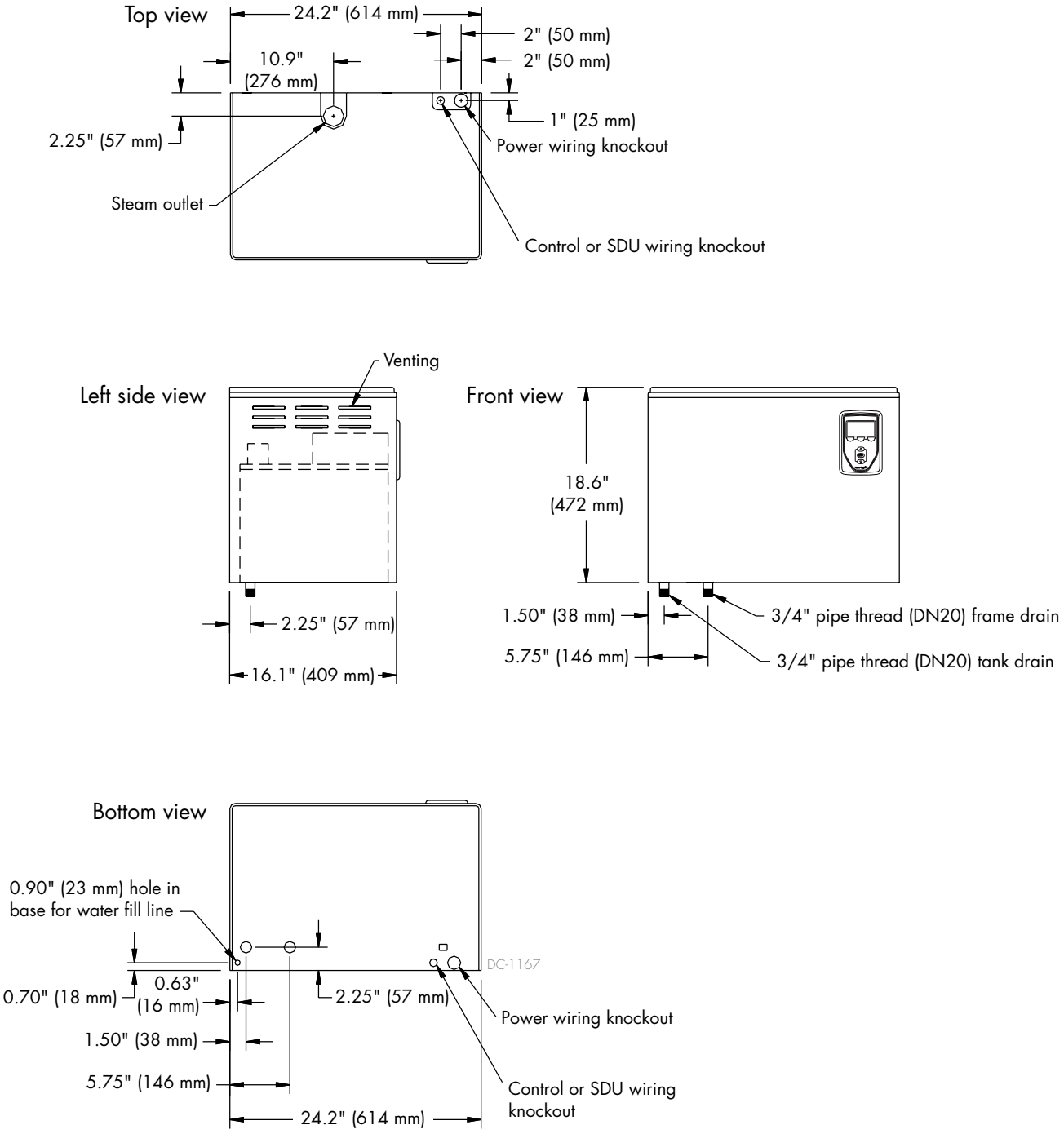

Dispersion options

The duct dispersion options in Figure 6-1 and the open space dispersion options in Figure 6-2 are available for Vapormist humidifiers. For installation details, see “Dispersion” beginning on Page 18.

FIGURE 6-1: VAPORMIST HUMIDIFIER DUCT DISPERSION OPTIONS

Ultra-sorb

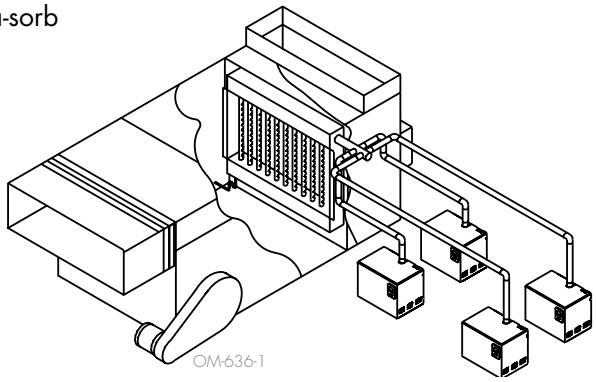

Rapid-sorb

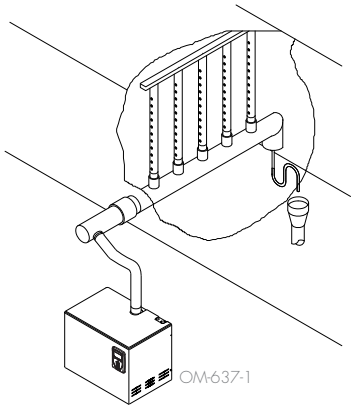

Single dispersion tube

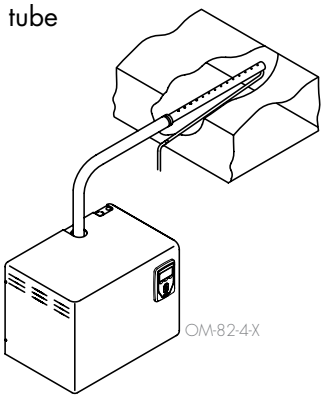

FIGURE 6-2: SDU MOUNTING OPTIONS

Remote from humidifier

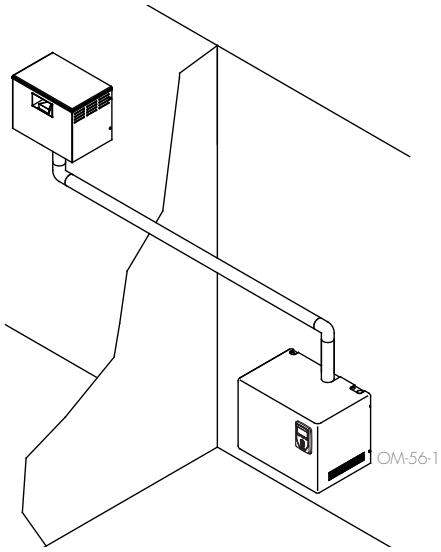

Directly above humidifier

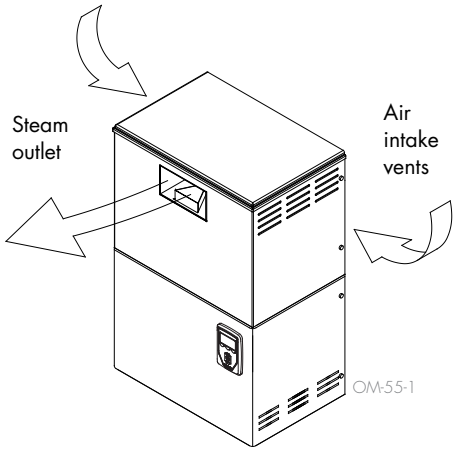

Selecting a location

HUMIDIFIER

When selecting a location for the humidifier, consider the following:

- **Proximity to the duct**

  Install the humidifier near the air duct system where the dispersion assembly will be located. The maximum recommended length for steam hose connecting a single humidifier to a dispersion assembly is 10' (3 m). The maximum recommended developed length for tubing connecting a single humidifier to a dispersion assembly is 20' (6 m).

  For more information about installing dispersion assemblies, see "Dispersion," beginning on Page 18.

- **Elevation of the installed dispersion assembly**

  The recommended installation location for the dispersion assembly is at an elevation higher than the humidifier. However, if the dispersion assembly must be installed at an elevation lower than the humidifier, install a drip tee and drain. See "Drip tee installation" on Page 21.

  Before installing a dispersion assembly or interconnecting piping, review all pitch requirements in the "Dispersion" section of this manual.

- **Required clearances (see Figure 9-1)**

- **Electrical connections**

  Electrical power supply connections are at the lower or upper right rear corner of the unit. See "Wiring" on Pages 14 and 15.

- **Supply water and drain piping connections**

  Water supply piping and drain connections are at the lower left rear corner of the unit. See the piping illustrations and instructions starting on Page 10.

- **Exterior wall insulation**

  Install the humidifier on an exterior wall only if the wall is properly insulated.

DISPERSION CONTROL DEVICES

See Figure 17-1 for recommended installation locations for the dispersion assembly and associated control devices.

FIGURE 7-1: INSTALLATION OVERVIEW

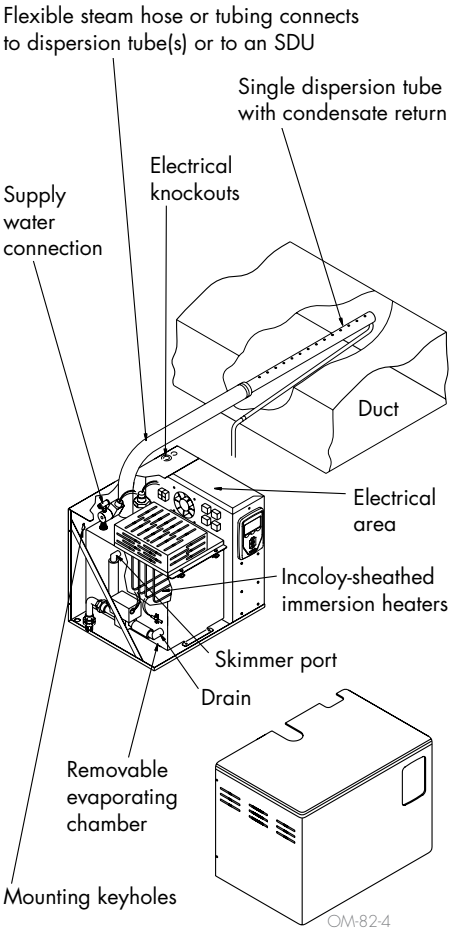

Mounting

WALL MOUNTING THE HUMIDIFIER

Mount the humidifier level and plumb, using the lag bolts provided. Follow the instructions below for mounting on a stud wall with wood studs 16" (406 mm) on center. See Figures 10-1 and 11-1.

1. Mark hole locations at centers of studs, and predrill 1/4" (6 mm) diameter pilot holes.
2. Secure cabinet to wall with lag bolts provided. See mounting keyholes in Figure 8-1.

Note: Use the appropriate mounting methods and mounting hardware for other wall types.

WARNING

Mounting hazard
Mount humidifier per the instructions in this manual and to a structurally stable surface. Improper mounting of the humidifier can cause it to fall or tip, resulting in severe personal injury or death.

FIGURE 8-1: VAPORMIST MOUNTING KEYHOLE LOCATIONS AND DIMENSIONS

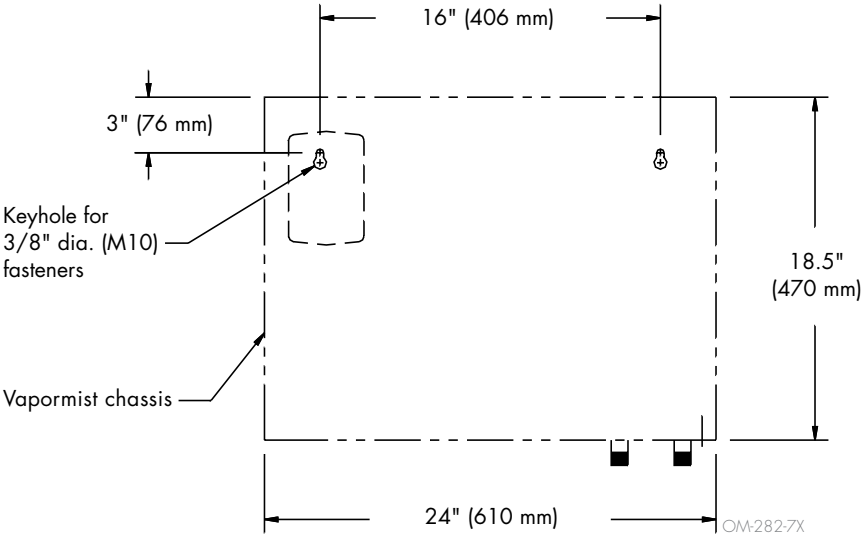

Mounting

FIGURE 9-1: VAPORMIST CLEARANCE RECOMMENDATIONS

Maintain these clearances for service and maintenance.

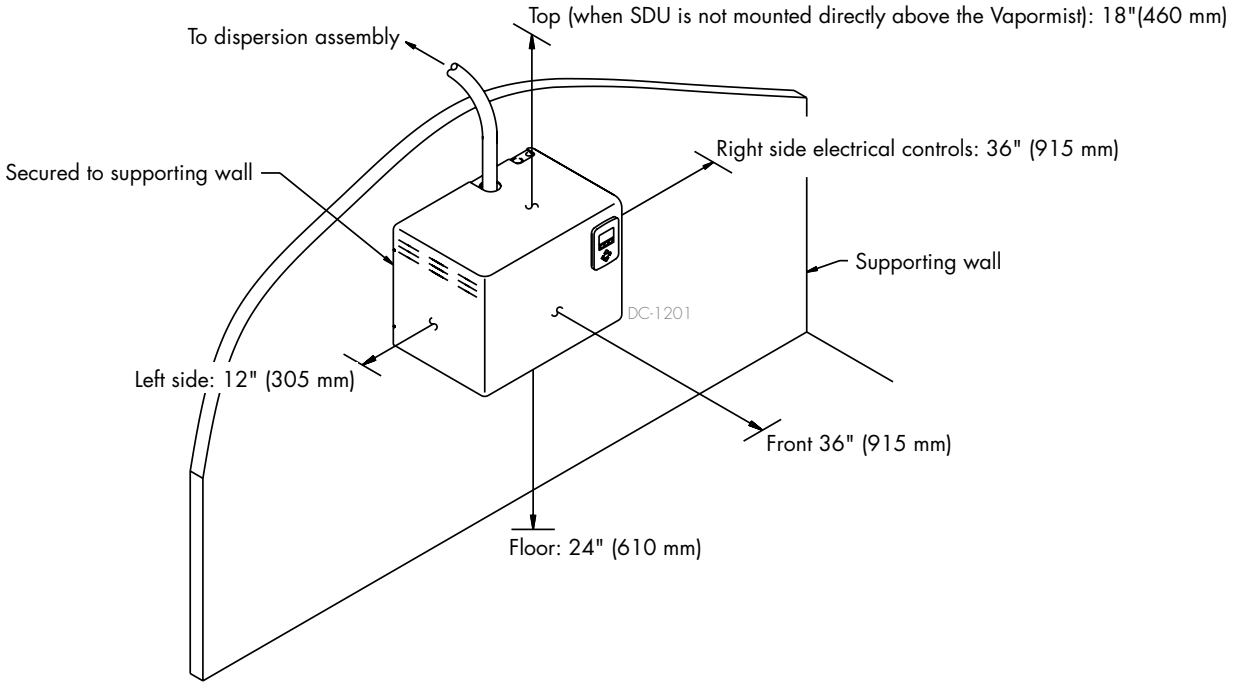

Piping: Tap/softened water

FIGURE 10-1: VAPORMIST (TAP/SOFTENED WATER) FIELD PIPING OVERVIEW

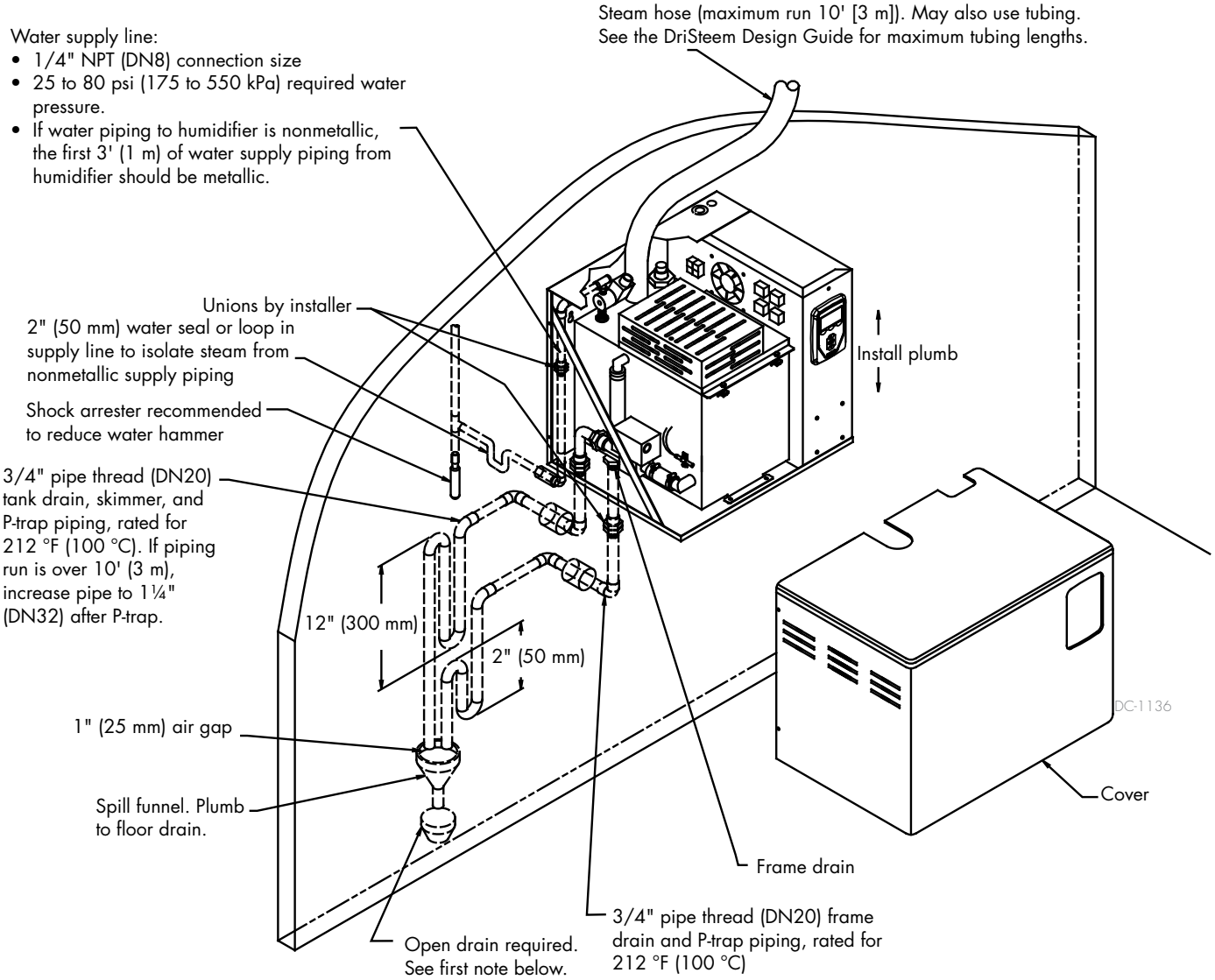

Notes:
- Locate air gap only in spaces with adequate temperature and air movement to absorb flash steam; otherwise, condensation may form on nearby surfaces. Refer to governing codes for drain pipe size and maximum discharge water temperature.
- Offset humidifier from spill funnel or floor drain to prevent flash steam from rising into cabinet.
- Dashed lines indicate provided by installer.
- Water supply inlet is more than 1" (25 mm) above skim/overflow port, eliminating the possibility of backflow or siphoning from tank. No additional backflow prevention is required; however, governing codes prevail.
- Install a union in water supply and drain lines as shown to allow tank removal.
- Damage caused by chloride corrosion is not covered by your DriSteem warranty.

mc_042710_1327-VM

Piping: RO/DI water option

FIGURE 11-1: VAPORMIST (RO/DI WATER OPTION) FIELD PIPING OVERVIEW

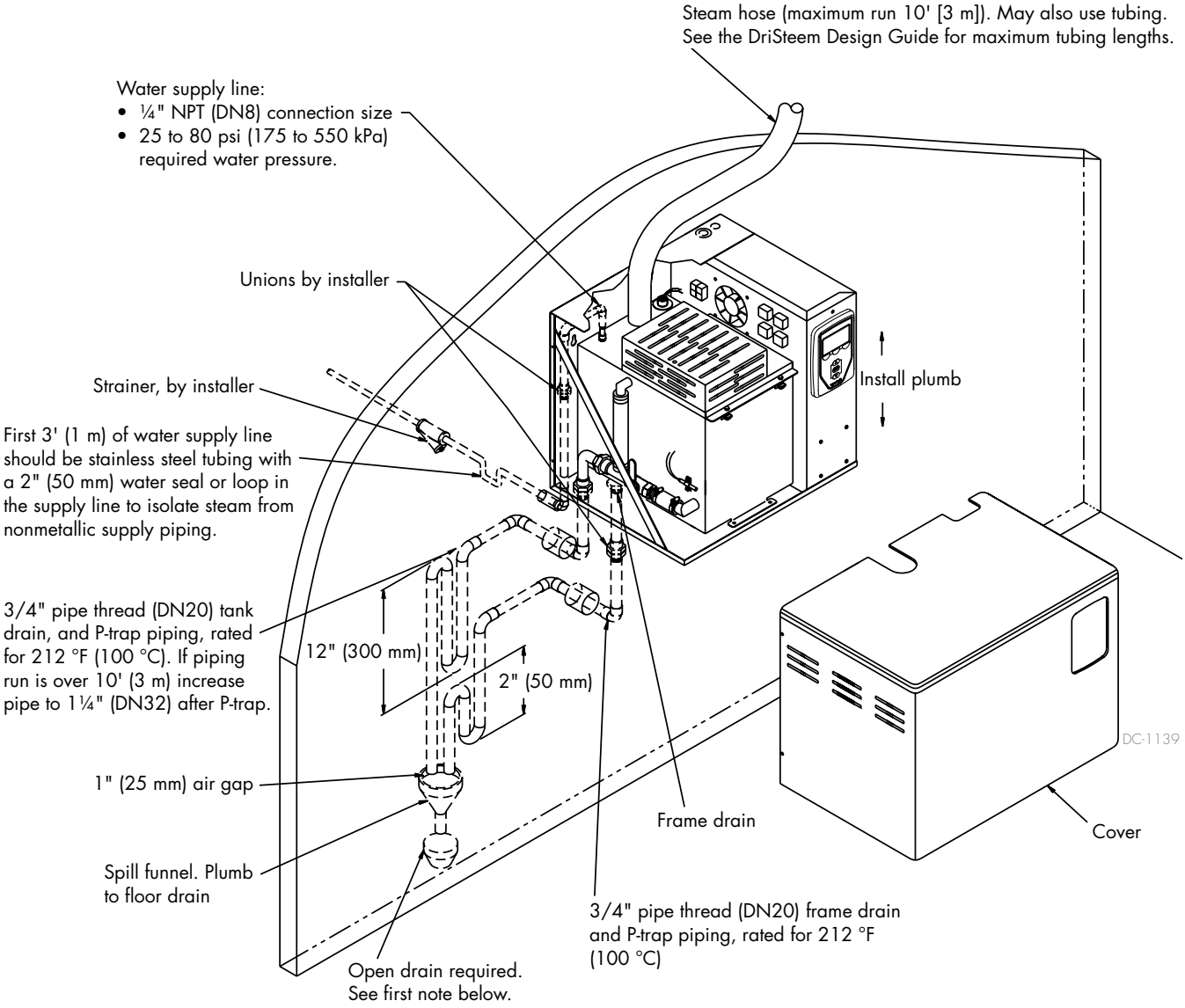

Notes:
- Locate air gap only in spaces with adequate temperature and air movement to absorb flash steam; otherwise, condensation may form on nearby surfaces. Refer to governing codes for drain pipe size and maximum discharge water temperature.
- Offset humidifier from spill funnel or floor drain to prevent flash steam from rising into the cabinet.
- Dashed lines indicate provided by installer.
- The water supply inlet is more than 1" (25 mm) above the overflow port, eliminating the possibility of backflow or siphoning from the tank. No additional backflow prevention is required; however, governing codes prevail.
- Install a union in the water supply and drain lines as shown to allow tank removal.
- Damage caused by chloride corrosion is not covered by your DriSteem warranty.

Piping: Supply water and drain piping

Supply water piping may be of any code-approved material (copper, steel, or plastic). The fill valve connection size is a 1/4" pipe thread (DN8) fitting except in Europe where it is a DN10 pipe thread fitting. In cases where water hammer may be a possibility, consider installing a shock arrestor. Water pressure must be between 25 psi and 80 psi (175 kPa and 550 kPa).

If water piping to humidifier is nonmetallic, we recommend that the first 3' (1 m) of water supply piping from the humidifier be metallic with a 2" (50 mm) water seal or loop in the supply line to isolate steam from nonmetallic supply piping.

Drain piping may be of any code-approved material (copper, steel, or plastic rated for 212 °F [100 °C] minimum). If drainage by gravity is not possible, use a reservoir pump rated for 212 °F (100 °C) water.

The final connection size is 3/4" (DN20) copper for the tank and frame drains. Do not reduce this connection size. Pipe the tank and frame drains separately, as shown in Figures 10-1 and 11-1, to prevent backflow of drain water into the humidifier cabinet.

If the equivalent length of pipe from the humidifier drain to the plumbing system drain is more than 10' (3 m), increase the pipe size to 1¼" (DN32).

See Figures 10-1 and 11-1 for more piping instructions.

Important: Install unions in the water supply and drain lines as shown in Figures 10-1 and 11-1 to allow tank removal.

mc_062810_0930-VM

CAUTION

Hot discharge water
Discharge water can be as hot as 212 °F (100 °C) and can damage the drain plumbing.

To prevent such damage from humidifiers without water tempering, allow the tank to cool before draining.

Humidifiers equipped with a water tempering device such as a DriSteem Drane-kooler need fresh make-up water in order to function properly. Make sure the water supply to the water tempering device remains open during draining.

Excessive supply water pressure
Supply water pressure greater than 80 psi (550 kPa) can cause the humidifier to overflow.

FIGURE 12-1: DRANE-KOOLER WATER TEMPERING DEVICE

DriSteem's Drane-kooler, shown mounted to a humidifier, tempers discharged water. For other Drane-kooler mounting options or for more information, contact your DriSteem representative/distributor, or view the Drane-kooler product data sheet in the literature section at www.dristeem.com

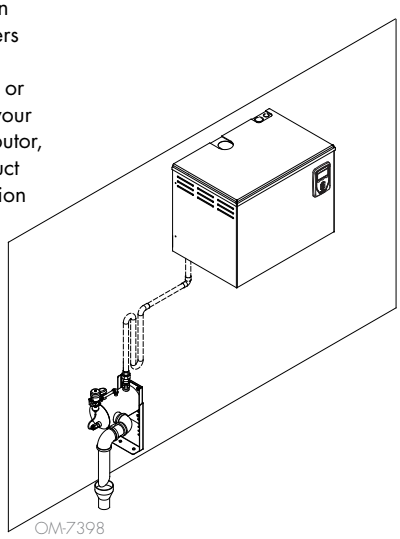

Piping: Drane-kooler

FIGURE 13-1: DRANE-KOOLER FIELD PIPING CONNECTIONS

Notes:
- Dashed lines indicate provided by installer.
- Total length of pipe between humidifier and Drane-kooler not to exceed 10' (3 m).

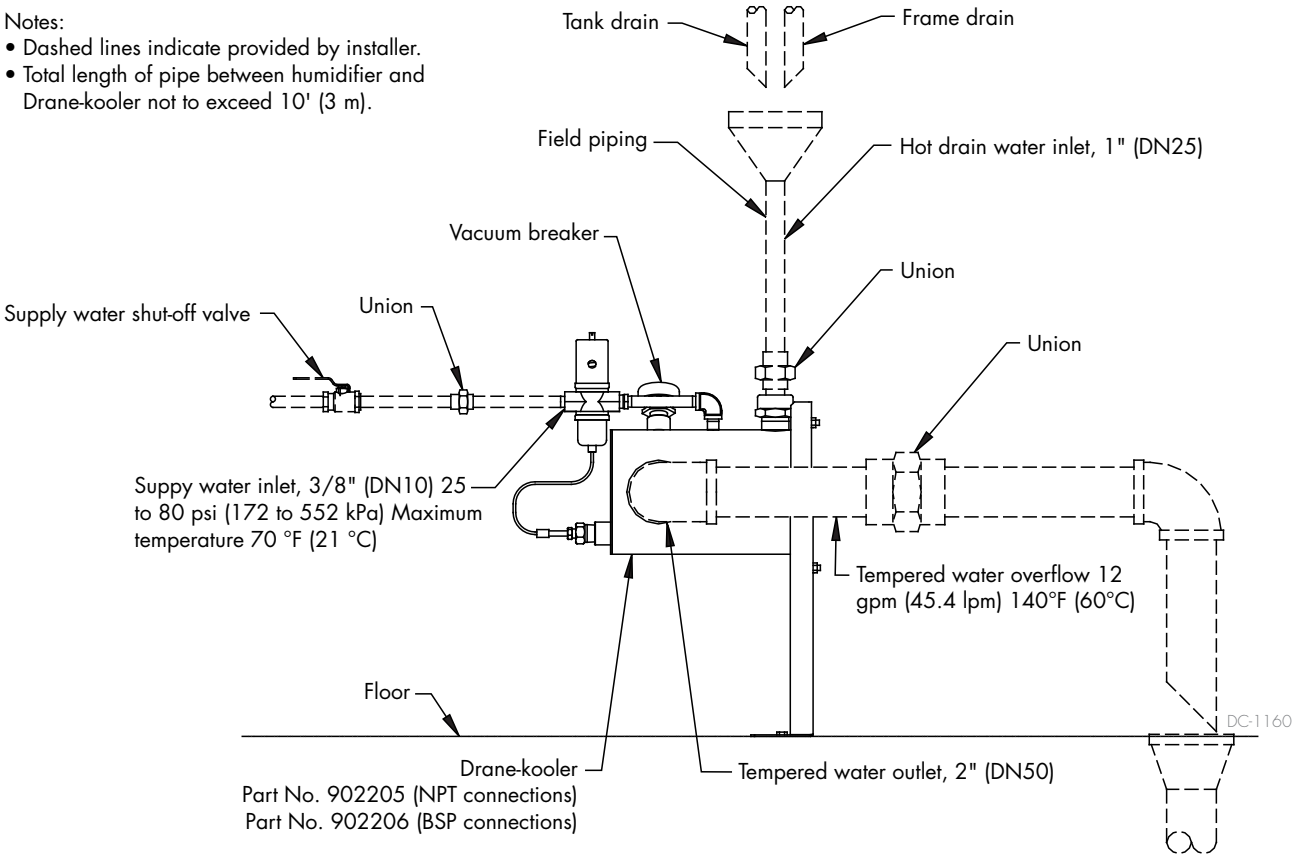

FIGURE 13-2: LIFTING DRAIN WATER

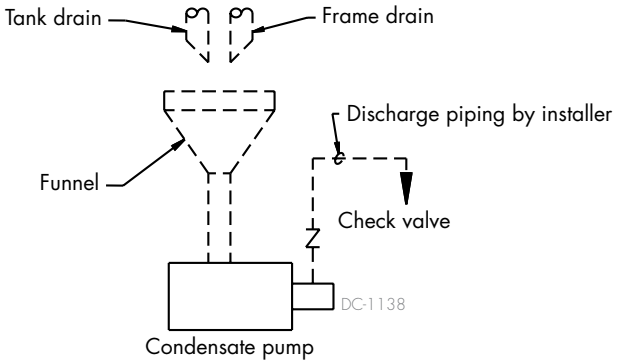

Note:
Use a condensate pump rated for your application. Pumps are rated by fluid temperature, head (pressure), and flow (gpm). Contact your local DriSteem representative for pump selection.

Wiring

HUMIDIFIER FIELD WIRING

All wiring must be in accordance with all governing codes, and with the humidifier wiring diagrams. The diagrams are located inside the removable subpanel cover on the right side of the humidifier cabinet. Power supply wiring must be rated for 220 °F (105 °C).

When selecting a location for installing the humidifier, avoid areas close to sources of electromagnetic emissions such as power distribution transformers.

The fill valve, drain valve, probes, and temperature sensors use Class 2, 24 VAC power.

The use of semiconductor fusing sized per the National Electric Code is recommended with the SSR option.

GROUNDING REQUIREMENTS

The approved earth ground must be made with solid metal-to-metal connections and must be a good conductor of radio frequency interference (RFI) to earth (multistranded conductors).

Ground wire should be the same AWG (mm2) size as the power wiring or sized per NEC requirements (in Europe, IEC 60364 requirements).

PROPER WIRING TO PREVENT ELECTRICAL NOISE

Electrical noise can produce undesirable effects on electronic control circuits, which affects controllability. Electrical noise is generated by electrical equipment such as inductive loads, electric motors, solenoid coils, welding machinery, or fluorescent light circuits. The electrical noise or interference generated from these sources (and the effect on controllers) is difficult to define, but the most common symptoms are erratic control or intermittent operational problems.

Important:

- For maximum EMC (electromagnetic compatibility) effectiveness, wire all humidity, high limit, and airflow controls using multicolored shielded/screened plenum-rated cable with a drain wire for the shield/screen. Connect the drain wire to the shield/screen ground terminal with wire less than 2" (50 mm) in length.
- Do not ground shield at the device end.

mc_061610_0625-NA

⚠ WARNING

Electric shock hazard

Only qualified electrical personnel should perform field wiring installation procedures. Improper wiring or contact with energized circuits can cause property damage, severe personal injury, or death as a result of electric shock and/or fire.

Do not remove the humidifier electrical panel cover or the heater terminal cover until electrical power is disconnected. Contact with energized circuits can cause property damage, severe personal injury, or death as a result of electrical shock.

FIGURE 14-1: FIELD WIRING REQUIREMENTS

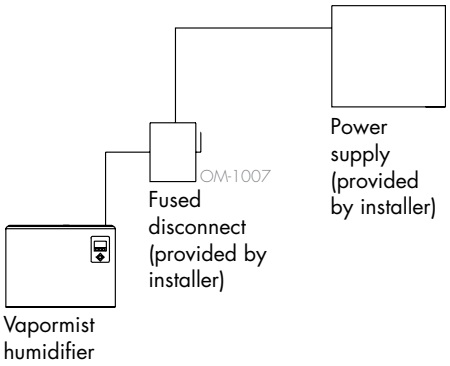

Notes:

- Control wiring and power wiring must be run in dedicated or separate earthed metal conduit, cable trays, or trunking.
- Separate the line voltage wiring from low voltage control circuit wiring when routing electrical wiring inside the humidifier cabinet.
- Do not use chassis or safety grounds as current-carrying commons. Never use a safety ground as a conductor or neutral to return circuit current.

Wiring

FIGURE 15-1: SHIELDED/SCREENED CABLE DRAIN WIRE CONNECTION TO LUG

Humidifier side view

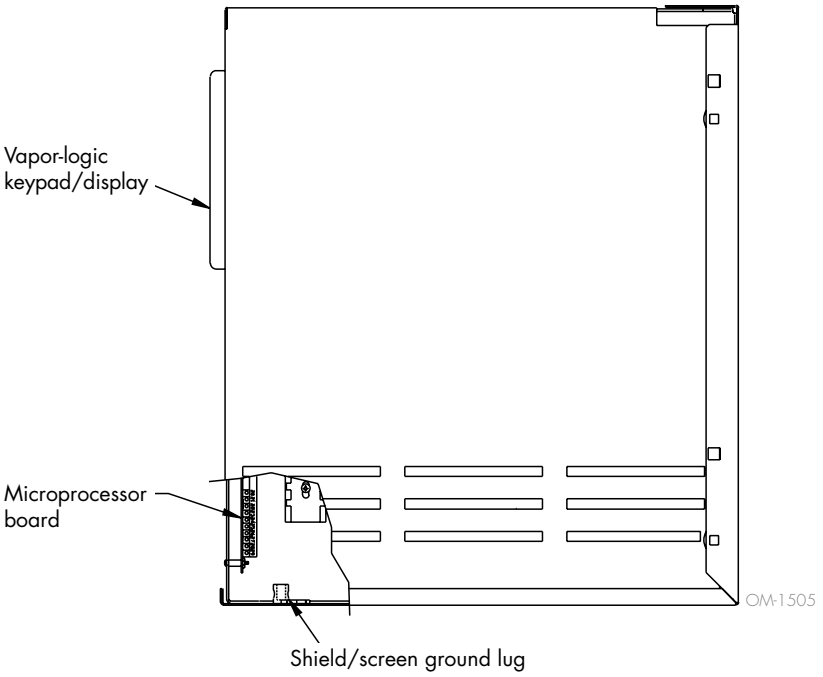

Note:
For maximum EMC effectiveness, all humidity, temperature, and airflow controls should be wired using multicolored shielded/screened plenum-rated cable with a drain wire for the shield/screen. The drain wire should be connected to the shield/screen ground terminal with its length kept to less than 2" (50 mm).

Table 15-2:
European breaker requirements

I max. A	Breaker size
0 - 8.0	10
8.1 - 10.4	13
10.5 - 12.8	16
12.9 - 16	20
16.1 - 20	25
20.1 - 25.6	32
25.7 - 32	40
32.1 - 40	50
40.1 - 50.4	63
50.5 - 64	80
64.1 - 80	100
80.1 - 100	125
100.1 - 128	160
128.1 - 160	200

Table 15-1:
European wiring requirements

230 volt single phase			400 volt three phase		
Amps	Wire size mm^2	Ground wire size mm^2	Amps	Wire size mm^2	Ground wire size mm^2
0 - 18	2.5	2.5	0 - 15.7	2.5	2.5
18.1 - 24	4	4	15.8 - 21	4	4
24.1 - 30.7	6	6	21.1 - 27	6	6
30.8 - 42.7	10	10	27.1 - 37.5	10	10
42.8 - 57	16	16	37.6 - 51	16	16
57.1 - 75.7	25	16	51.1 - 66.7	25	16
75.8 - 93.7	35	16	66.8 - 82.5	35	16
93.8 - 113.2	50	25	82.6 - 100.5	50	25
113.3 - 144	70	35	100.6 - 128.2	70	35
144.1 - 174	95	50	128.3 - 155.2	95	50
174.1 - 201.7	120	70	155.3 - 179.2	120	70

Dispersion: Selecting the dispersion assembly location

DriSteem humidifiers operate with several types of dispersion assemblies for open spaces and for ducts and air handling units.

Dispersion assemblies in ducts and air handling units must be positioned where the water vapor being discharged is carried off with the airstream and is absorbed before it can cause condensation or dripping.

- Non-wetting distance is the dimension downstream from the leaving side of the steam dispersion assembly to the point where wetting will not occur, although wisps of steam may be present. This distance was calculated during humidification system design and is dependent on several application parameters. To determine your dispersion assembly's non-wetting distance, consult your system's design engineer or project documentation. Non-wetting distance can also be calculated using DriSteem's DriCalc sizing and selection software, available at www. dristeem.com. Note that your current design conditions may vary from conditions used for system design.
- In general, the dispersion assembly is best placed where the air can absorb the moisture being added without causing condensation at or after the unit. This normally will be after the heating coil or where the air temperature is highest.
- Place the dispersion assembly such that absorption will occur
  - before the intake of a high efficiency filter, because the filter can remove the visible moisture and become waterlogged;
  - before coming in contact with any metal surface;
  - before fire or smoke detection devices;
  - before a split in the duct; otherwise, the dispersion assembly can direct more moisture into one duct than the other.
- When draining dispersion condensate to an open drain, provide a 1" (25 mm) air gap between the condensate drain piping and the drain. Locate the gap only in spaces with adequate temperature and air movement to absorb flash steam; otherwise, condensation may form on nearby surfaces.

mc_060210_0838

Dispersion: Interconnecting piping requirements

The steam outlet on the humidifier is sized to the output of the humidifier. DO NOT use steam hose or tubing with an inside diameter smaller than the humidifier steam outlet. See note.

- See maximum steam carrying capacities in Table 17-1.
- If the humidifier must be located higher than the dispersion assembly, use the recommended installation shown in Figure 21-1.

Important:

Reducing the inside diameter of the steam hose or tubing will result in the internal humidifier system pressure exceeding the parameters for acceptable performance.

CONNECTING TO HUMIDIFIER WITH STEAM HOSE

- Support steam hose to prevent sags, or low spots, and to maintain a minimum pitch of 2"/ft (15%) back to the humidifier.
- Use DriSteem steam hose. Other manufacturers of steam hose may use unacceptable release agents or material mixes that can affect humidifier system performance adversely. Using hose from alternative manufacturers increases the possibility of tank foaming and accelerated aging. Foaming causes condensate discharge at the dispersion assembly.
- Do not use steam hose in outdoor applications.
- Do not insulate steam hose. Insulation causes accelerated heat aging, causing the steam hose to become hard and susceptible to failure due to cracks.

Important:

Failure to follow the recommendations in this section can result in excessive back pressure on the humidifier. This will result in unacceptable humidification system performance such as leaking gaskets, blown water seals, erratic water level control, and spitting condensate from dispersion tubes.

Table 17-1:
Maximum steam carrying capacity and length of interconnecting steam hose or tubing

Steam hose[1]						Copper or stainless steel tubing					
Hose I.D.		Maximum capacity		Maximum length[2]		Tubing size		Maximum capacity[3]		Maximum developed length[4]	
inches	DN	lbs/hr	kg/h	ft	m	inches	DN	lbs/hr	kg/h	ft	m
1½	40	150	68	10	3	1½	40	150	68	20	6.1
2	50	250	113	10	3	2	50	220	100	30	9.2

1. When using steam hose, use DriSteem steam hose for best results. Field-supplied hose may have shorter life and may cause foaming in the evaporating chamber resulting in condensate discharge at the dispersion assembly. Do not use steam hose for outdoor applications.
2. Maximum recommended length for steam hose is 10' (3 m). Longer distances can cause kinking or low spots.
3. Insulate tubing to minimize loss of capacity and efficiency.
4. Developed length of tubing equals measured length plus 50% of measured length, to account for fittings.
   Longer tubing lengths are possible at capacities lower than listed maximums. Consult factory.

Note: Capacities and lengths in this table are based on total maximum pressure drop in hose or tubing of 5" wc (1250 Pa)

Dispersion: Interconnecting piping requirements

CONNECTING TO HUMIDIFIER WITH TUBING

- See Figures 28-1 and 29-1 for interconnecting tubing pitch requirements for single dispersion tube applications. See Table 31-1 for interconnecting tubing pitch requirements for Rapid-sorb applications.
- Support tubing between the humidifier steam outlet and the dispersion system with pipe hangers. Failure to properly support the entire tubing weight may cause damage to the humidifier tank and void the warranty.
- 90° elbows are not recommended; use two 45° elbows, 1' (0.3 m) apart.
- Insulate tubing to reduces the loss in output caused by condensation.

mc_060310_1145-NA

WARNING

Excessive moisture hazard
DriSteem strongly recommends installing a duct airflow proving switch and a duct high limit humidistat. These devices prevent a humidifier from making steam when there is low airflow in the duct or when the RH level in the duct is too high. Failure to install these devices can result in excessive moisture in the duct, which can cause bacteria and mold growth or dripping through the duct.

Table 18-1:
Steam loss of interconnecting steam hose or tubing

Description	Nominal hose or tubing size		Steam loss				Insulation thickness	
			Noninsulated		Insulated			
	inches	DN	lbs/hr/ft	kg/h/m	lbs/hr/ft	kg/h/m	inches	mm
Steam hose	1½	40	0.15	0.22	N/A	N/A	N/A	N/A
	2	50	0.20	0.30	N/A	N/A	N/A	N/A
Tubing	1½	40	0.11	0.16	0.020	0.030	2	50
	2	50	0.14	0.21	0.025	0.037	2	50

Note: These data are based on an ambient air temperature of 80 °F (27 °C), fiberglass insulation, and copper tubing.

mc_051310_1215

Dispersion: Drip tee installation

Install a drip tee as shown below when the humidifier is mounted higher than the dispersion assembly, when interconnecting hose or tubing needs to go over an obstruction, or when interconnecting piping runs are long.

Important: Steam hose must be supported to prevent sagging or low spots.

WARNING

Hot surface and steam hazard
Dispersion tube, steam hose, or tubing can contain steam, and surfaces can be hot. Discharged steam is not visible. Contact with hot surfaces or air into which steam has been discharged can cause severe personal injury.

FIGURE 19-1: DRIP TEE INSTALLATION

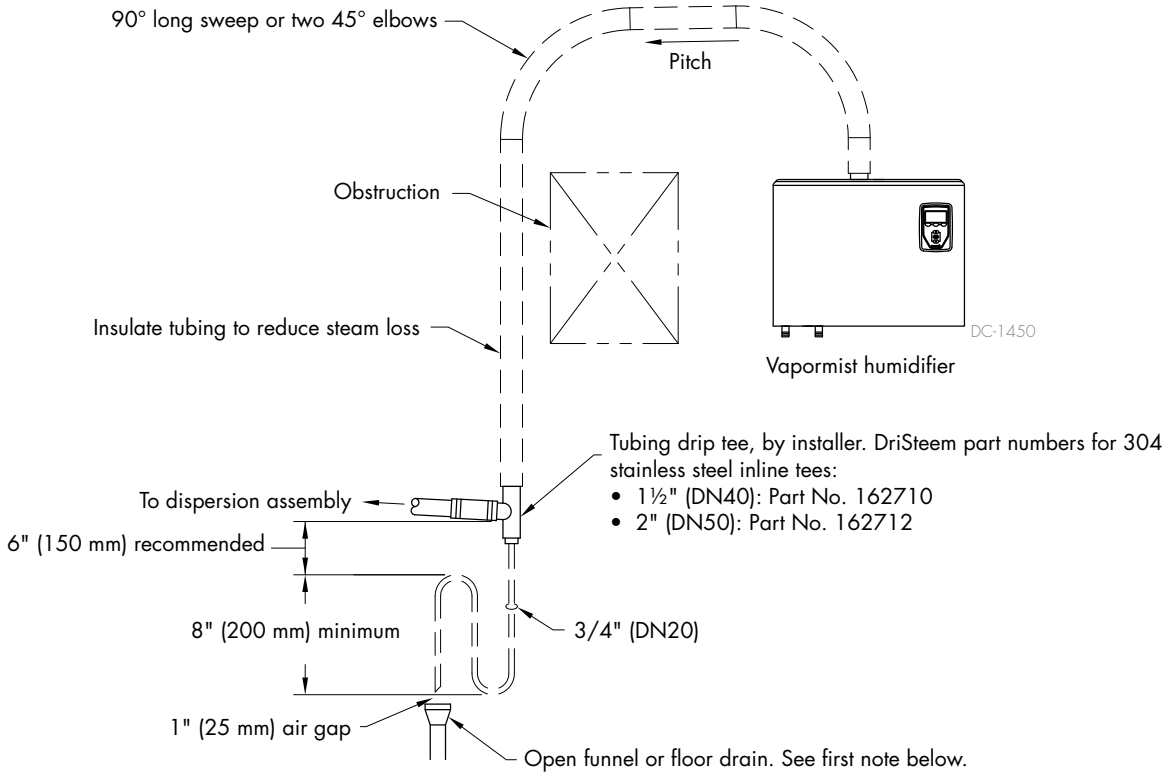

Notes:
- Locate air gap only in spaces with adequate temperature and air movement to absorb flash steam; otherwise, condensation may form on nearby surfaces. Refer to governing codes for drain pipe size and maximum discharge water temperature.
- Support steam hose so there are no sags or low spots.
- Dashed lines indicate provided by installer.

Dispersion: SDU-I and SDU-E

SDU-I is available for Vapormist humidifier models VM-2 through VM-10.

SDU-E is available for all Vapormist humidifiers except VM-2 and models using 240V, 277V, and 480V three-phase power with the SSR control option and drawing more than 32.7 amps.

Note: SDUs ship separate from the Vapormist.

mc_052510_1525-VM

MOUNTING SDU-I AND SDU-E

Both SDUs can be mounted on a wall directly above the Vapormist cabinet or mounted on a wall remote from the Vapormist (see Figure 6-3). Use the mounting template on the box for correct placement. Two lag bolts are provided with each SDU.

- Installation must comply with governing codes.
- See interconnecting piping requirements in Table 17-1, and the drip tee installation instructions on Page 21.
- Provide at least 6" (150 mm) clearance on each side of the SDU.
- Field wiring is required to connect the SDU fan and airflow proving switch terminals to Vapormist electrical panel terminals. Refer to the external connections diagram in the package shipped with your unit. See Figure 20-1. Minimum wire size for field wiring is 18-gauge (1.5 mm2) stranded wire.
- For wall mounting, use the mounting template on the box for correct placement. Two 3/8" lag bolts (M10 × 50 mm coach screws) are provided with each fan unit.
- When mounting on a stud wall (studs 16" [406 mm] on center), locate studs and position lag bolts (coach screws) in place so that each of the two lag bolts (coach screws) centers on a stud. Mark hole locations and predrill ¼" (6 mm) diameter pilot holes for a 3/8" × 2" lag bolt (M10 × 50 mm coach screw).
- For hollow block or poured concrete wall mounting, position template in place and mark the holes. Drill appropriate pilot hole for two 3/8" (M10) toggle bolts or two 3/8" (M10) machine bolt lead anchors (expansion bolts). Secure SDU frame in place.

WHEN PERFORMING VAPORMIST MAINTENANCE

If the SDU-E or SDU-I is installed immediately above the Vapormist, disconnect both hose clamps on the steam hose, grip the hose and rotate it to break it loose from the tubing, and then slide the hose up onto the SDU steam tube until sufficient clearance is provided to move the tank.

mc_062810_1005-VM

SDU-I: Instant, internal absorption

SDU-I (Space Distribution Unit Internal Absorption) disperses humidity with no visible vapor trail or wetness, making it ideal for use in finished spaces. The SDU-I fan mixes room air and steam to ensure complete absorption before discharge as humidified air.

Important: For visible vapor to be absorbed completely within the SDU-I unit before being discharged as humidified air, room air must be 45% RH or less. Trying to maintain greater than 45% RH will cause visible vapor and potential for moisture collection on the discharge grille.

SDU-E: Higher capacity

SDU-E (Space Distribution Unit External Absorption) is designed for higher capacity dispersion. SDU-E requires an installed condensate drain line and water seal, provided by installer.

FIGURE 20-1: SDU FIELD WIRING

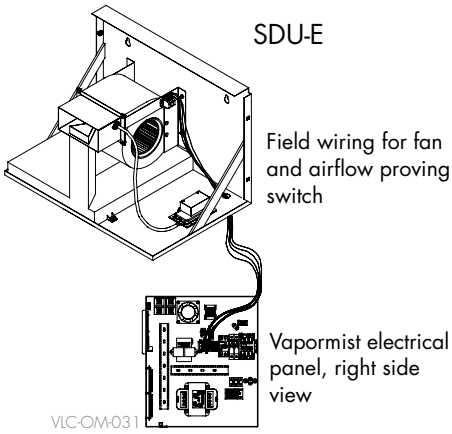

Dispersion: SDU-I and SDU-E

FIGURE 21-1: WALL-MOUNTED VAPORMIST AND SDU-I

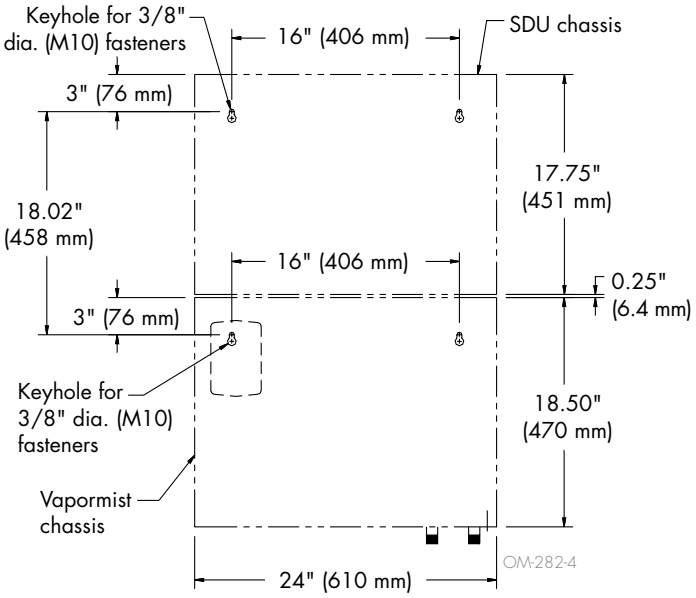

FIGURE 21-2: WALL-MOUNTED VAPORMIST AND SDU-E

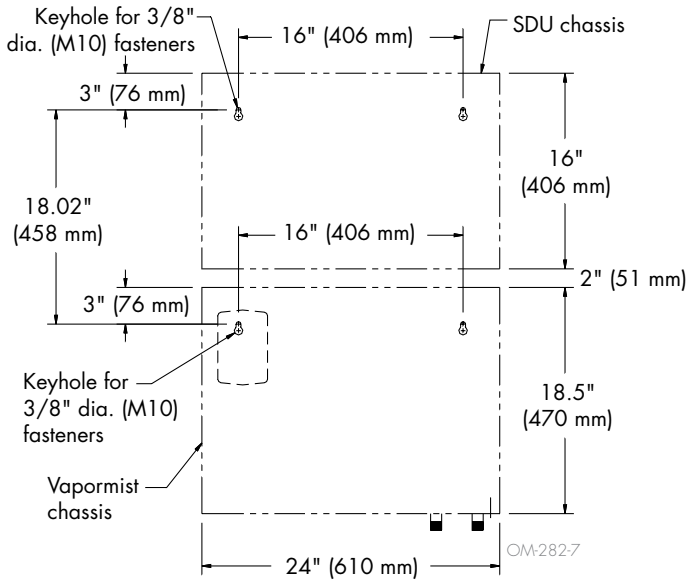

Dispersion: SDU-I and SDU-E

Table 22-1:
SDU specifications

SDU model	Maximum capacity		Shipping weight		Amps at 120V (50/60 Hz)	Horsepower	cfm	m^3/s	dB*
	lbs/hr	kg/h	lbs	kg					
SDU-I	30	13.6	68	31	3.20	1/5	760	0.36	58
SDU-E	102	46.3	61	28	2.07	1/8	545	0.26	68

* Measurement taken 6.5' (2 m) in front of SDU cabinet.

FIGURE 22-1: SDU-I MECHANICAL DETAIL

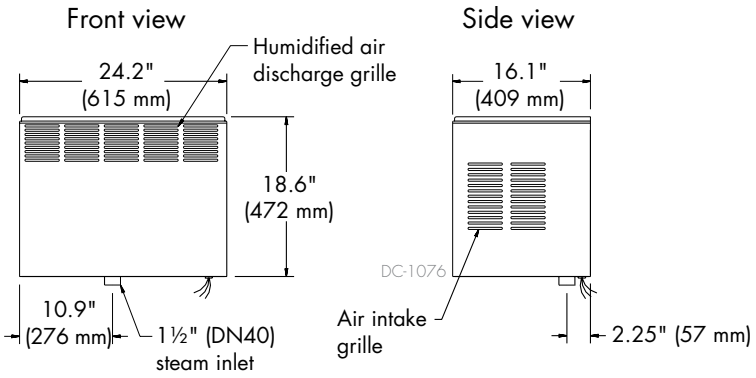

FIGURE 22-2: SDU-E MECHANICAL DETAIL

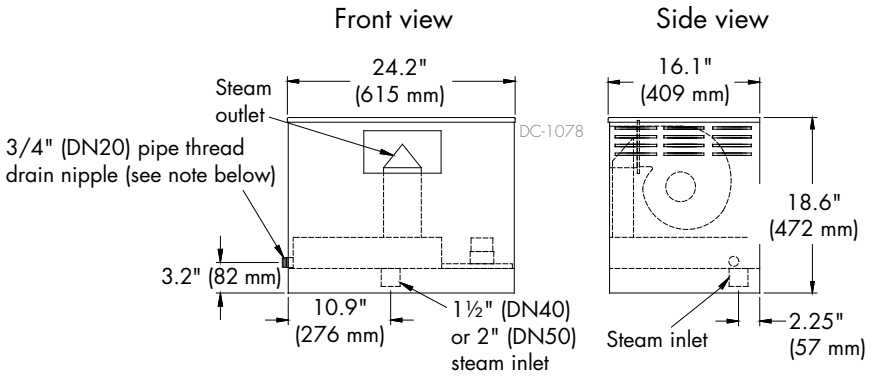

Note: SDU-E dispersion box requires an installed condensate drain line and water seal, provided by installer. See Figure 25-1.

Dispersion: SDU-I and SDU-E

SDU-E CONDENSATE DRAIN CONNECTION

1. Piping must be minimum 3/4" I.D. (DN20) and rated for 212 °F (100 °C) minimum continuous operating temperature.
2. Drain line must be piped as shown in Figure 23-1. Provide a 6" (152 mm) drop prior to a 4" (102 mm) water seal to ensure condensate drainage from the SDU-E, and to keep steam from blowing out of the drain line.
3. After the water seal, run the drain line to an open drain with a 1" (25 mm) vertical air gap. Cut the drain line at a 45 degree angle on the end above the drain to permit a direct stream of water into the drain pipe while maintaining a 1" (25 mm) air gap.
4. All drain lines must be installed and sized according to governing codes.
5. The drain line should have a union installed directly on the dispersion box ¾" nipple to accommodate future removal of the SDU-E shroud.
6. A drain line and water seal must be connected to the SDU-E fan unit dispersion box ¾" nipple. If the condensate is not drained from the dispersion box, standing water will accumulate. See Warning at right.
7. The dispersion box is constructed with a pitch toward the drain; however, the SDU-E frame must be installed plumb and level for the dispersion box to drain properly.

FIGURE 23-1: SDU-E DRAIN LINE PIPING

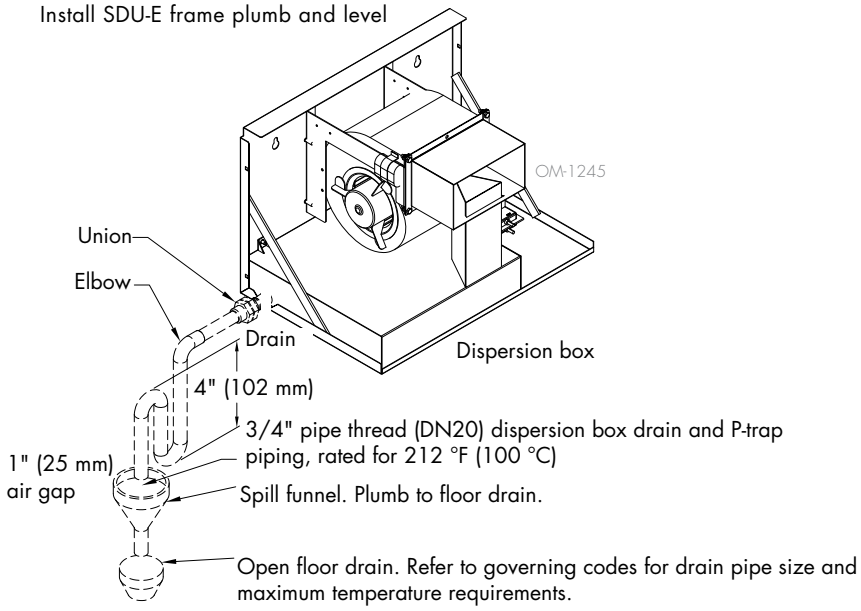

Mounting SDU-E

- SDU-E requires an installed condensate drain line and water seal (provided by installer). See Figure 23-1 and instructions at left.
- Spread dimensions greater than 3' (1 m) may require additional clearance. See Table 27-1).

⚠ WARNING

Hazards of standing water in SDU-E
If standing water is allowed to accumulate in the dispersion box, it can:

- Cause bacteria and mold growth, which can cause illness.
- Affect SDU-E fan unit performance.
- Cause 212 °F (100 °C) water to discharge from the SDU-E fan unit, which can cause severe personal injury.

Dispersion: SDU-I and SDU-E

SDU-E RISE, SPREAD, AND THROW

As steam is discharged from the SDU-E, it quickly cools and turns to a visible fog that is lighter than air. As this fog is carried away from the SDU-E by the airstream, it tends to rise toward the ceiling. If this fog contacts solid surfaces (columns, beams, ceiling, pipes, etc.) before it disappears, it could collect and drip as water. The greater the space relative humidity, the more the fog will rise, throw and spread.

Table 25-1 lists the minimum rise, throw and spread non-wetting distances for SDU-E at 40%, 50% and 60% RH in the space. Surfaces cooler than ambient temperature, or objects located within this minimum dimension, can cause condensation and dripping. To avoid steam impingement on surrounding areas, observe the minimum non-wetting distances in Table 25-1.

The SDU-E contains a blower (120 V, single-phase, 60 Hz) and an airflow proving switch (field-wired to the humidifier electrical panel). A wiring diagram of the SDU-E is included with the unit.

On a call for humidity, the humidifier begins producing steam, and the start relay energizes the SDU-E blower. When the call for humidity is satisfied, the Vapor-logic controller keeps the blower running to disperse residual moisture using a time delay.

mc_042710_1255

FIGURE 24-1: SDU-E RISE, SPREAD, AND THROW

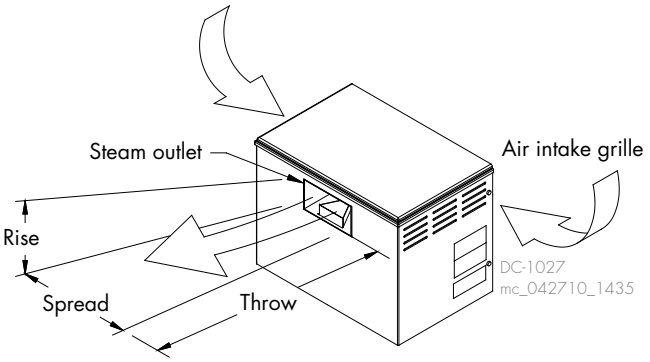

Dispersion: SDU-I and SDU-E

Table 25-1:
SDU-E minimum nonwetting distances

kW	Maximum steam capacity		40% RH @ 70 °F (21 °C)						50% RH @ 70 °F (21 °C)						60% RH @ 70 °F (21 °C)					
			Rise		Spread		Throw		Rise		Spread		Throw		Rise		Spread		Throw	
	lbs/hr	kg/h	ft	m	ft	m	ft	m	ft	m	ft	m	ft	m	ft	m	ft	m	ft	m
2	6	2.7	1.0	0.3	1.0	0.3	5.0	1.5	1.5	0.5	1.5	0.5	6.5	2.0	2.5	0.8	2.5	0.8	7.5	2.3
4	12	5.4	1.0	0.3	1.0	0.3	5.0	1.5	1.5	0.5	1.5	0.5	6.5	2.0	2.5	0.8	2.5	0.8	7.5	2.3
6	18	8.2	1.0	0.3	1.0	0.3	5.0	1.5	1.5	0.5	1.5	0.5	6.5	2.0	2.5	0.8	2.5	0.8	7.5	2.3
8	24	10.9	1.0	0.3	1.0	0.3	5.5	1.7	1.5	0.5	1.5	0.5	6.5	2.0	2.5	0.8	2.5	0.8	7.5	2.3
10	30	13.6	1.5	0.5	1.5	0.5	6.0	1.8	2.0	0.6	2.0	0.6	7.0	2.1	3.0	1.0	3.0	1.0	8.0	2.5
12	36	16.3	1.5	0.5	1.5	0.5	6.0	1.8	2.0	0.6	2.0	0.6	7.0	2.1	3.0	1.0	3.0	1.0	8.0	2.5
14	42	19.1	2.0	0.6	2.0	0.6	7.0	2.1	2.0	0.6	2.0	0.6	7.0	2.1	3.0	1.0	3.0	1.0	9.0	2.7
16	48	21.8	2.0	0.6	2.0	0.6	7.0	2.1	2.0	0.6	2.0	0.6	7.0	2.1	3.0	1.0	3.0	1.0	9.0	2.7
21	63	28.6	2.0	0.6	2.0	0.6	7.5	2.3	2.5	0.8	2.5	0.8	10.0	3.0	3.0	1.0	3.0	1.0	12.0	3.7
25	75	34.0	2.0	0.6	2.0	0.6	8.0	2.5	2.5	0.8	2.5	0.8	10.5	3.2	3.5	1.1	3.5	1.1	12.5	3.8
30	90	40.9	2.0	0.6	2.0	0.6	8.0	2.5	2.5	0.8	2.5	0.8	10.5	3.2	3.5	1.1	3.5	1.1	12.5	3.8
34	102	46.3	2.0	0.6	2.0	0.6	8.0	2.5	2.5	0.8	2.5	0.8	10.5	3.2	3.5	1.1	3.5	1.1	12.5	3.8

Notes:
- Surfaces or objects directly in the path of steam discharge may cause condensation and dripping.
- To avoid steam impingement on surrounding areas, observe the minimum nonwetting dimensions in this table.
- Rise: The minimum nonwetting height above the steam outlet of the SDU-E.
- Spread: The minimum nonwetting width from the steam outlet of the SDU-E.
- Throw: The minimum nonwetting horizontal distance from the steam outlet of the SDU-E.

Dispersion: Single dispersion tube

FIGURE 26-1: SINGLE DISPERSION TUBE WITHOUT CONDENSATE DRAIN

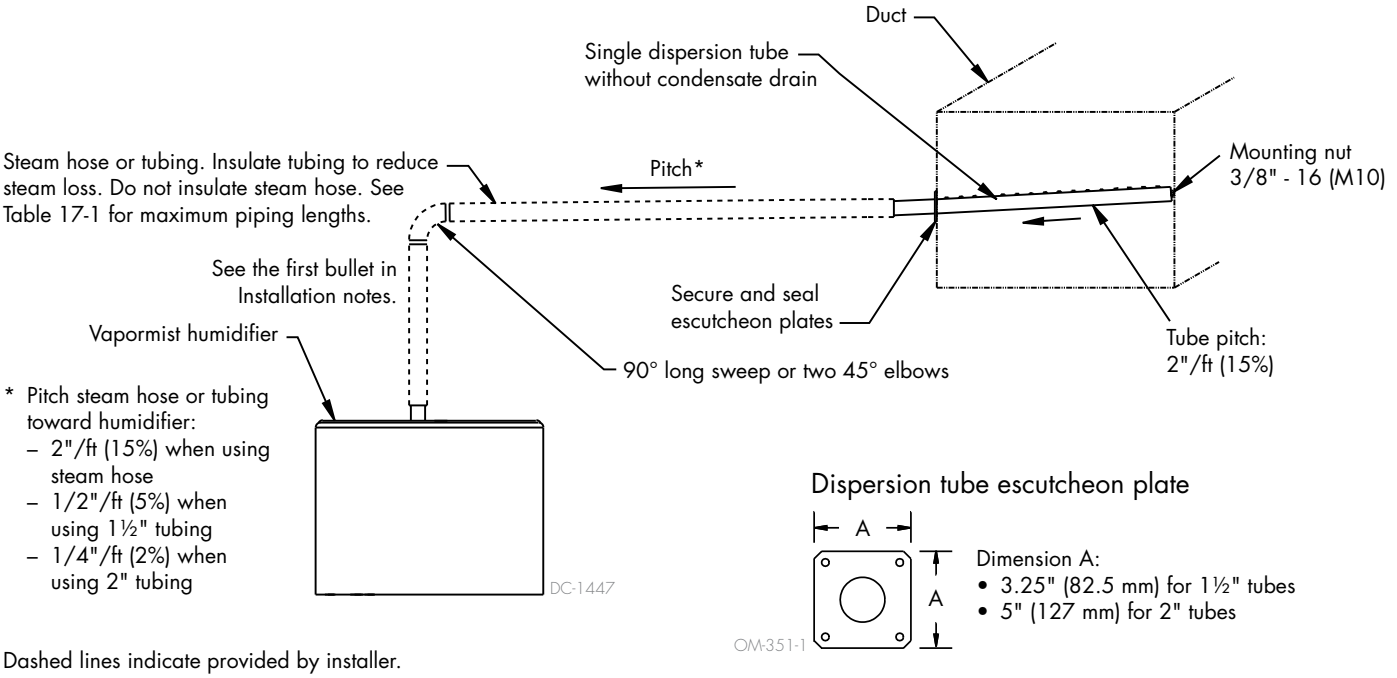

Dashed lines indicate provided by installer.

INSTALLATION NOTES

- Use a hose clamp to connect the steam outlet to steam hose. Use a hose cuff and clamps to connect the steam outlet to tubing.
- Tubing diameter must match Vapormist steam outlet size 1½" (DN40), 2" (DN50), or NPT connection.
- See the steam carrying capacity and steam loss tables on Pages 17 and 18.
- Orient dispersion tube with tubelets (steam orifices) pointing up.
- If mounting the humidifier above the level of dispersion tube, see “Drip tee installation” on Page 19.

Important:

Failure to follow the recommendations in this section can result in excessive back pressure on the humidifier. This will result in unacceptable humidification system performance such as leaking gaskets, blown water seals, erratic water level control, and spitting condensate from dispersion tubes.

WARNING

Hot surface and steam hazard

Dispersion tube, steam hose, or tubing can contain steam, and surfaces can be hot. Discharged steam is not visible. Contact with hot surfaces or air into which steam has been discharged can cause severe personal injury.

Dispersion: Single dispersion tube

FIGURE 27-1: SINGLE DISPERSION TUBE WITH CONDENSATE DRAIN

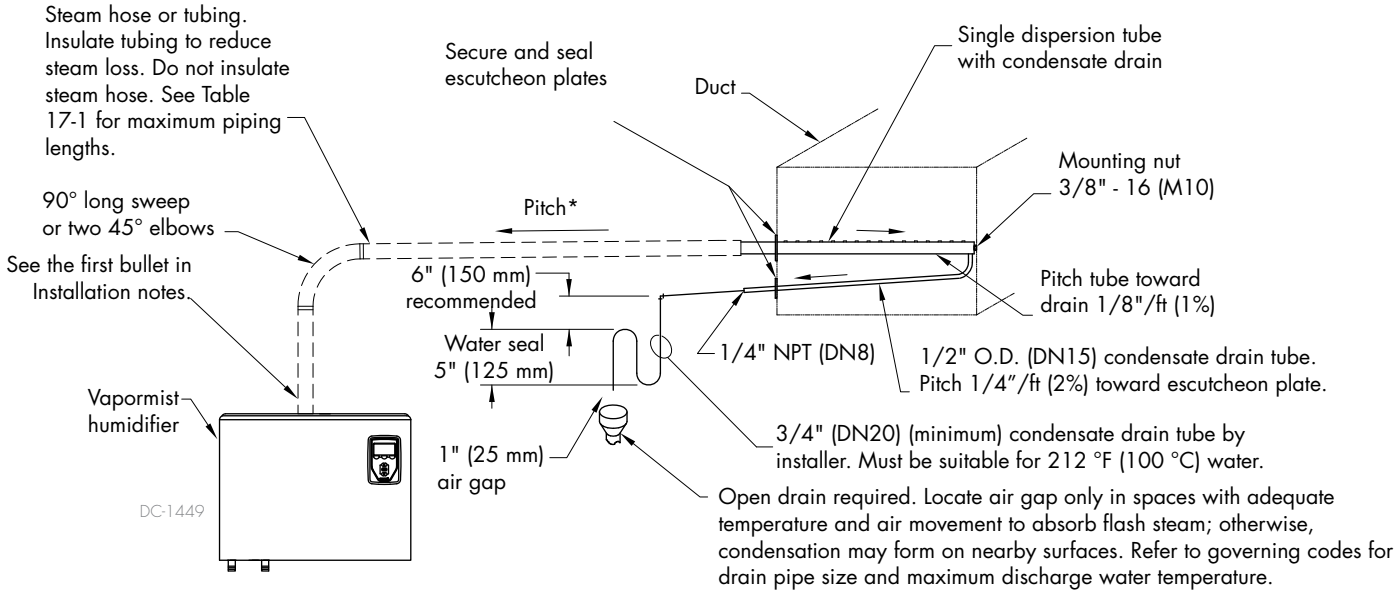

* Pitch steam hose or tubing toward humidifier:
- 2"/ft (15%) when using steam hose
- 1/2"/ft (5%) when using 1½" tubing
- 1/4"/ft (2%) when using 2" tubing

Dashed lines indicate provided by installer.

Escutcheon plates

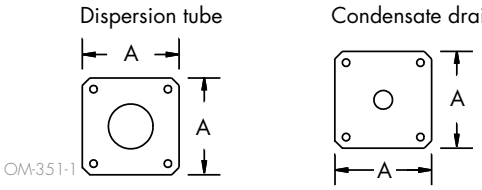

Dimension A:
- 3.25" (82.5 mm) for 1½" tubes
- 5" (127 mm) for 2" tubes

Table 27-1: Single dispersion tube capacities

Tube size		Insulated (High-Efficiency Tubes)				Uninsulated			
		Without drain		With drain		Without drain		With drain	
inches	DN	lbs/hr	kg/h	lbs/hr	kg/h	lbs/hr	kg/h	lbs/hr	kg/h
1½	40	29	13.2	65	29.5	28	12.7	62	28.2
2	50	65	29.5	97	44.1	62	28.2	93	42.3

Notes:
- Single dispersion tube available with face width between 6" (152 mm) up to 120" (3048 mm) in 1" (25 mm) increments.
- If face width is <19" (483 mm), tube capacity may be reduced. Consult DriSteem or see DriCalc for the correct capacity.
- Hose kits are available that include dispersion tube, 10 ft (3 m) of steam hose, and hardware

Dispersion: Rapid-sorb

Read all dispersion instructions in this manual, and follow the installation instructions below:

- Unpack shipment and verify receipt of all Rapid-sorb components with packing list. Report any shortages to DriSteem immediately. The components typically include the following:
  - Multiple dispersion tubes
  - Header
  - 3/4" × 2" (19 mm × 51 mm) L-bracket

  Note: Dispersion tubes, header, and L-bracket are each tagged with the customer requested identification number.
  - A single duct escutcheon plate the size of the header
  - Slip couplings or hose cuffs and clamps
  - Accessories such as duct plates, slip couplings, or hose cuffs
  - Bolts and washers for mounting the dispersion tubes to the bracket
- L-bracket mounting holes (see note at left):
  - L-bracket 50" (1270 mm) long or shorter has a mounting hole 4" (100 mm) from each end for mounting the L-bracket to the duct or air handler wall.
  - L-bracket longer than 50" (1270 mm) has an additional mounting hole in the center.

  Note: Hardware for mounting the L-bracket to the duct or air handler wall and the hardware for the header support bracket is not provided.
- Select an installation location that provides necessary access in and around the ductwork or air handler.
- The Rapid-sorb typically is installed centered side to side in a duct, or is installed across the face of a coil in an air handler.
- The center line of the outer dispersion tubes should never be closer than 4.5" (114 mm) from the side of the ductwork or air handler wall.
- The following instructions are for a typical Rapid-sorb installation — horizontal-airflow duct with Rapid-sorb header either inside or outside the duct. See the DriCalc Installation Guides library or contact your representative/distributor or DriSteem for installation instructions for air handler or vertical airflow applications.

⚠ WARNING

Hot surface and steam hazard
Dispersion tube, steam hose, or tubing can contain steam, and surfaces can be hot. Discharged steam is not visible. Contact with hot surfaces or air into which steam has been discharged can cause severe personal injury.

Important:
Before marking and drilling holes in the duct or air handler, refer to ALL pitch requirements for the Rapid-sorb assembly you received (see Table 29-1). The size, quantity, and location of penetrations are determined by the dimensions and configuration of the Rapid-sorb assembly you received.

Important:
Failure to follow the recommendations in this section can result in excessive back pressure on the humidifier. This will result in unacceptable humidification system performance such as leaking gaskets, blown water seals, erratic water level control, and spitting condensate from dispersion tubes.

Dispersion: Rapid-sorb

Pitch requirements

- For Rapid-sorb with the header outside a horizontal-airflow duct, consider the following:
  - 1½" (DN40) dispersion tubes: Use a fastener of sufficient length to accommodate the 1/8"/ft (1%) pitch requirements toward the 3/4" pipe thread (DN20) header drain fitting.
  - 2" (DN50) dispersion tubes: The bracket can be mounted flush to the ductwork. The 1/8"/ft (1%) pitch typically can be accomplished in the length of the hose cuffs used to connect the tubes to the header.
- See Table 29-1 and the drawings on the following pages for pitch requirements.

Table 29-1:
Pitch of interconnecting piping, dispersion tubes, and headers for Rapid-sorb evaporative dispersion units

Airflow	Type of interconnecting piping	Diameter of interconnecting piping	Pitch of interconnecting piping	Pitch of dispersion tubes	Pitch of header
Horizontal	Steam hose	1½" (DN40) 2" (DN50)	2"/ft (15%) toward Rapid-sorb	Vertically plumb	1/8"/ft (1%) toward condensate drain
	Tubing	1½" (DN40) 2" (DN50)	1/8"/ft (1%) toward Rapid-sorb		
Vertical	Steam hose	1½" (DN40) 2" (DN50)	2"/ft (15%) toward Rapid-sorb	2"/ft (15%) toward header	1/8"/ft (1%) toward condensate drain
	Tubing	1½" (DN40) 2" (DN50)	1/8"/ft (1%) toward Rapid-sorb		

Table 29-2:
Rapid-sorb tube capacities*

Tube diameter		Tube capacity			
		Insulated (High-Efficiency Tubes)		Uninsulated	
inches	DN	lbs/hr	kg/h	lbs/hr	kg/h
1½	40	43.0	19.5	40.0	18.2
2	50	80.0	36.4	77.0	35.0

* Capacities shown are for horizontal airflow.
See DriCalc for vertical airflow capacities. If face height is <22" (559 mm), tube quantity per panel may need to increase to compensate for reduced capacity of short tubes. Consult DriSteem or see DriCalc for the correct calculation.

Table 29-3:
Rapid-sorb header capacities

Header capacity		Header diameter	
lbs/hr	kg/h	inches	DN
≤ 250	≤ 113	2	50
251-500	114-227	3	80
501-800	228-363	4	100
801-1300	364-591	5	125
1301-2100	592-955	6	150

Dispersion: Rapid-sorb

FIGURE 30-1: RAPID-SORB IN A HORIZONTAL AIRFLOW WITH HEADER OUTSIDE THE DUCT

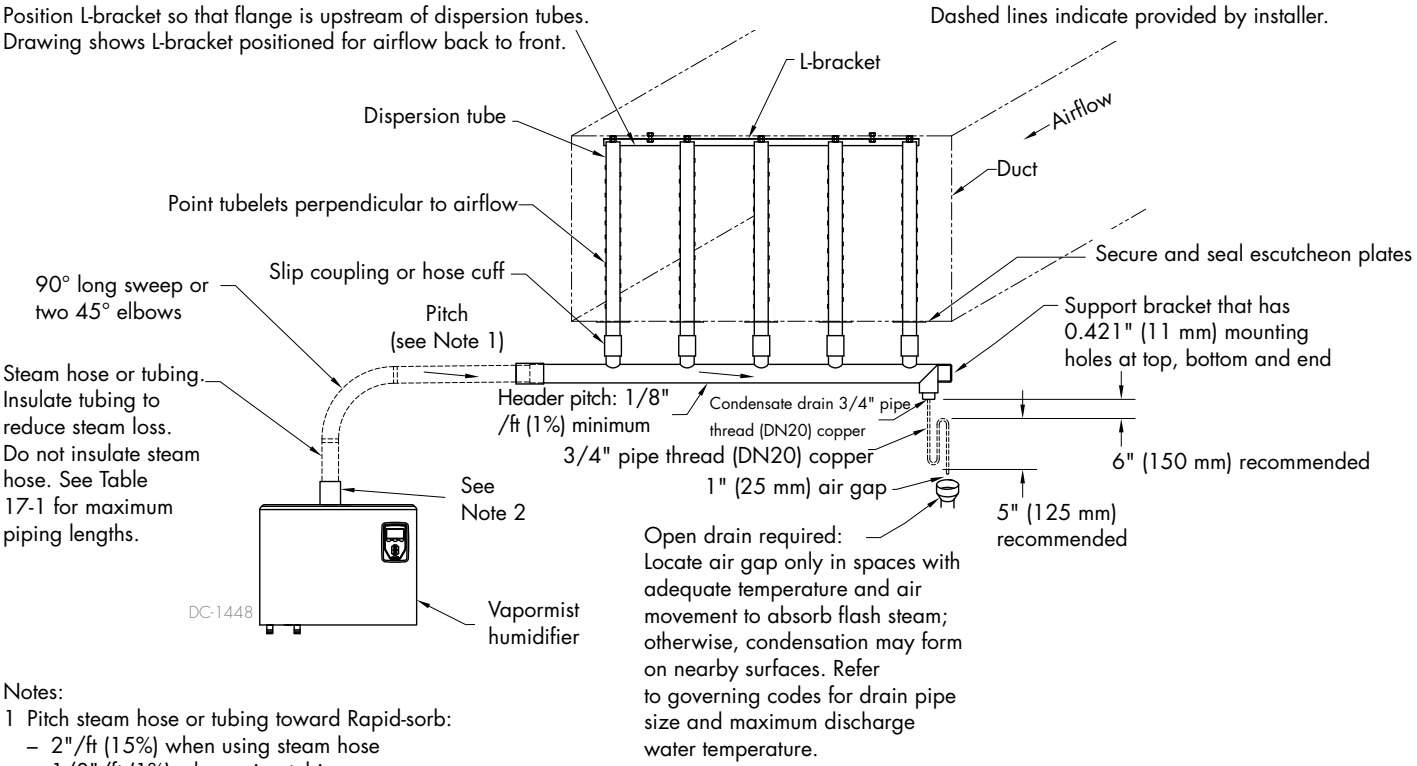

Notes:
1 Pitch steam hose or tubing toward Rapid-sorb:
  – 2"/ft (15%) when using steam hose
  – 1/8"/ft (1%) when using tubing
2 Use a hose clamp to connect steam outlet to steam hose.
  Use a hose cuff and clamps to connect steam outlet to tubing.

mc_062810_0815-VM

Dispersion tube escutcheon plates

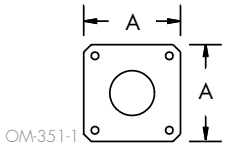

Dimension A:
- 3.25" (82.5 mm) for 1½" tubes
- 5" (127 mm) for 2" tubes

HEADER OUTSIDE OF DUCT, HORIZONTAL AIRFLOW

1. Mark and cut holes in the ductwork for the dispersion tubes. Use the L-bracket as a template to mark the holes on the duct floor.
2. Temporarily, loosely suspend or support the header below the final location. Vertical balance point of the dispersion tube length dictates where the header should be suspended or temporarily supported.
3. Mount the dispersion tubes to the header with the slip coupling or hose cuff (provided).
   - When installing slip couplings for 1½" (DN40) dispersion tubes, take care not to shear the O-rings.
   - Set the slip coupling on the header stub or dispersion tube so the O-ring is resting on the face of the tubing.
   - Rotate the slip coupling as you push it onto the tubing.
   - The O-rings are lubricated at the factory. If additional lubrication is necessary, DO NOT use a petroleum-based lubricant.

Dispersion: Rapid-sorb

4. Position the flange of the L-bracket so it is upstream of the tubes when the assembly is raised and fastened into position. Fasten the L-bracket to the end of the dispersion tubes with the provided bolt, lock washer, and flat washer.
5. Before tightening the L-bracket bolts to the dispersion tubes:
   - For 1½" (DN40) dispersion tubes:
     - Dispersion tube will rotate in slip coupling. Verify that dispersion tube orifices are directed perpendicular to airflow.
     - Dispersion tube and slip coupling must be fully engaged on header stub for O-rings to provide a seal.
   - For 2" (DN50) dispersion tubes:

     Before securing hose cuff in place with hose clamps on dispersion tube and the header stub, verify that dispersion tube orifices are directed perpendicular to airflow.
6. Slide the assembly up until the L-bracket aligns with the mounting holes in the duct.
   - For 1½" (DN40) dispersion tubes:
     - Header pitch is duplicated in the L-bracket.
     - Dispersion tube and slip coupling must be fully engaged on header stub for O-rings to provide a seal.
     - High end of L-bracket can be fastened tight to duct or air handler.
     - Fastener on low end of L-bracket must be long enough to compensate for pitch. Use a nut on both sides of L-bracket and duct or air handler for stability.
   - For 2" (DN50) dispersion tubes:
     - Fasten bracket to top of duct and use hose cuffs to compensate for header pitch.
     - Before securing hose cuffs with hose clamps on dispersion tube and header stub, verify that header pitch, 1/8"/ft (1%) toward drain, is maintained.
7. Permanently secure both ends of header, and verify that header pitch, 1/8"/ft (1%) toward drain, is maintained.
8. Verify that all fasteners are secure:
   - L-bracket to duct
   - Dispersion tubes to L-bracket
   - Hose clamps on 2" (DN50) tubes
9. Secure and seal the dispersion tube escutcheon plate and condensate drain tube escutcheon plate around the respective tubes, if applicable.

Note:

See Page 34 for steam supply and condensate drain line connection instructions.

Dispersion: Rapid-sorb

FIGURE 32-1: RAPID-SORB IN A HORIZONTAL AIRFLOW WITH HEADER INSIDE THE DUCT

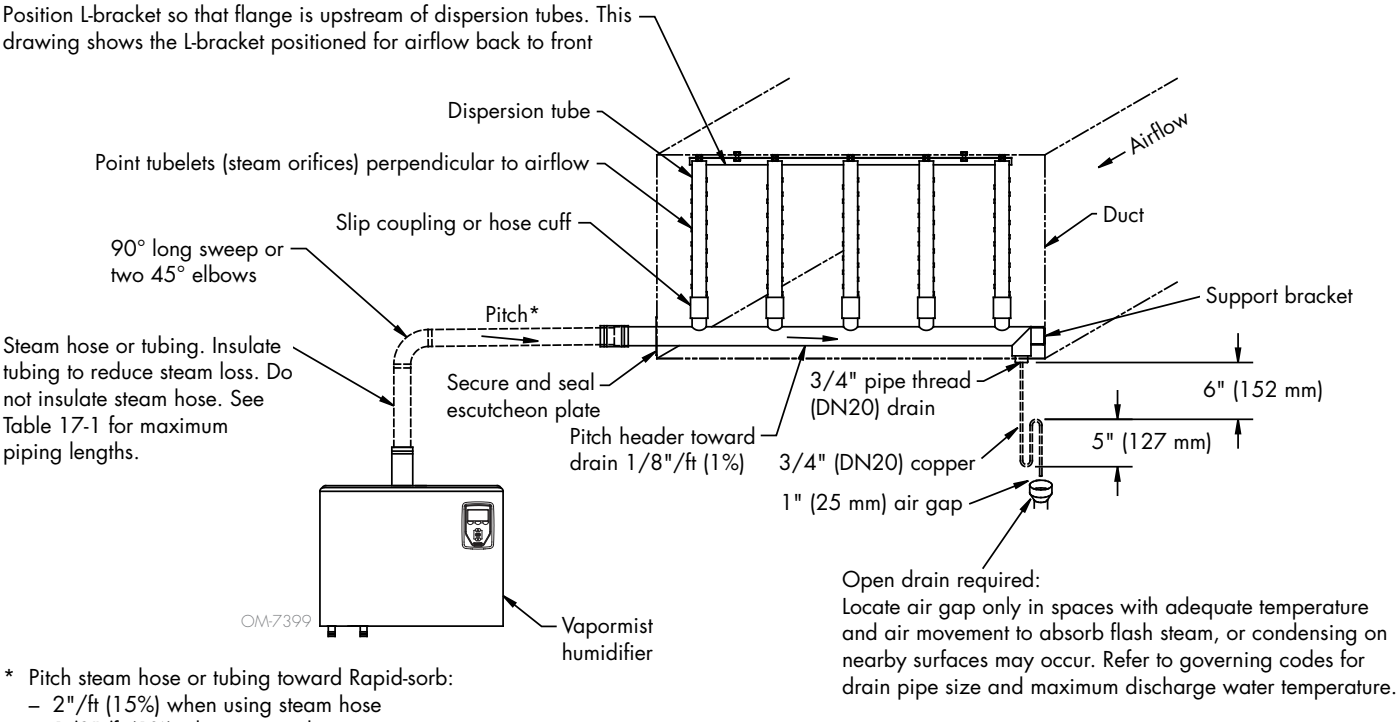

* Pitch steam hose or tubing toward Rapid-sorb:
- 2"/ft (15%) when using steam hose
- 1/8"/ft (1%) when using tubing

Dashed lines indicate provided by installer.

mc_062810_0820-VM

HEADER INSIDE OF DUCT, HORIZONTAL AIRFLOW

1. Mark and cut holes in ductwork or air handler for steam header penetration, condensate drain piping, and header support bracket fastener. Allow 1/8"/ft (1%) header pitch toward the support bracket when you drill the hole for the header support bracket fastener.
2. Loosely fasten the header in place.
3. Rotate the header 90° so the header stubs point horizontally in the duct.
4. When installing in an air handler, the rotation of the header is often less than 90°. Typically, due to the condensate drain piping requirements, the header can be set on the floor of the air handler, assembled in the vertical position, and then raised and mounted in place.

⚠ WARNING

Hot surface and steam hazard
Dispersion tube, steam hose, or tubing can contain steam, and surfaces can be hot. Discharged steam is not visible. Contact with hot surfaces or air into which steam has been discharged can cause severe personal injury.

Dispersion: Rapid-sorb

5. Mount the dispersion tubes on the header with the slip couplings or hose cuffs:
   - When installing slip couplings for 1½" (DN40) dispersion tubes, take care not to shear O-rings.
   - Set slip coupling on header stub or dispersion tube so O-ring is resting on face of tubing.
   - Rotate slip coupling while pushing it onto the tubing.
   - O-rings are lubricated at factory. If additional lubrication is necessary, DO NOT use petroleum-based lubricant.
6. Allow the dispersion tubes to rest against the bottom of the duct.
7. Position the flange of the L-bracket so it is upstream of the tubes when the assembly is rotated into position. Fasten the L-bracket to the end of the dispersion tubes with the provided bolt, lock washer, and flat washer.
8. Rotate the assembly up until the L-bracket aligns with the mounting holes in the duct or air handler.
   - For 1½" (DN40) dispersion tubes:
     - Header pitch is duplicated in the L-bracket.
     - Dispersion tube and slip coupling must be fully engaged on header stub for O-rings to provide a seal.
     - High end of L-bracket can be fastened tight to duct or air handler.
     - Fastener on low end of L-bracket must be long enough to compensate for pitch. Use a nut on both sides of L-bracket and duct or air handler for stability.
   - 2" (DN50) dispersion tubes
     - Fasten bracket to top of duct and use hose cuffs to compensate for header pitch.
     - Before securing hose cuffs with hose clamps on dispersion tube and header stub, verify that dispersion tube orifices are directed perpendicular to airflow.
9. Verify that all fasteners are secure:
   - L-bracket to duct
   - Dispersion tubes to L-bracket
   - Hose clamps on 2" (DN50) tubes
   - Header support bracket fastener
10. Secure and seal the header escutcheon plate around the header.

Note:

See Page 36 for steam supply and condensate drain line connection instructions.

Dispersion: Rapid-sorb

STEAM SUPPLY CONNECTIONS TO RAPID-SORB HEADER

Connect the steam supply interconnecting piping from the humidifier to the Rapid-sorb. The steam supply piping requires a minimum of 1/8"/ft (1%) pitch toward the header.

If multiple humidifiers are supplying one Rapid-sorb, a multiple steam supply connector is needed. Typically, the multiple steam supply connector attaches to the Rapid-sorb header supply end with hose cuff and clamps:

1. Route the necessary number of steam supplies from the humidifiers to the steam supply connector.
2. Position the steam supply connector to accept the steam supplies while maintaining the necessary pitch.
3. Make sure the hose clamps on the steam supply connector and header are tight.

CONDENSATE DRAIN CONNECTIONS TO RAPID-SORB HEADER

Piping must be minimum 3/4" I.D. (DN20) and rated for 212 °F (100 °C) minimum continuous operating temperature.

The condensate drain line must be piped as shown in Figures 32-1 and 34-1. Provide a 6" (152 mm) drop prior to a 5" (127 mm) water seal to:

- Ensure drainage of condensate from the header
- Keep steam from blowing out of the drain line

After the water seal, run the drain line to an open drain with a 1" (25 mm) vertical air gap.

- Cut the drain line at a 45° angle on the end above the drain to permit a direct stream of water into the drain pipe while maintaining a 1" (25 mm) air gap.
- Locate air gap only in spaces with adequate temperature and air movement to absorb flash steam, or condensing on nearby surfaces may occur.

All drain lines must be installed and sized according to governing codes.

ULTRA-SORB

For Ultra-sorb steam dispersion panel instructions, see the installation, operation, and maintenance manual shipped with the Ultra-sorb.

CAUTION

Operate Rapid-sorb within rated steam capacity

Excessive steam flow to the Rapid-sorb steam dispersion assembly can cause condensate to exit the tubelets, which can cause water damage and standing water in the duct or air handler.

To avoid condensate exiting the tubelets, do not operate the Rapid-sorb beyond its rated capacity.

Principle of operation

FIGURE 35-1: VAPORMIST PRINCIPLE OF OPERATION

Tap/softened water Vapormist (shown with cover removed)

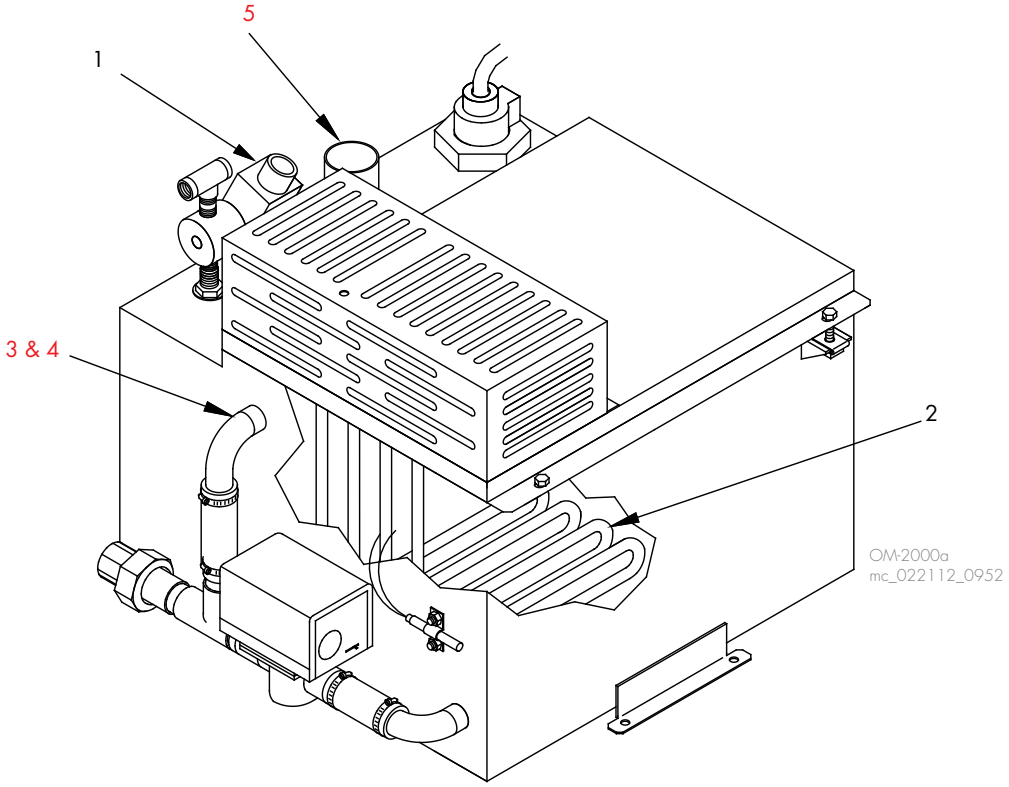

1. When the system is first activated, the fill valve opens and the evaporating chamber fills with water to the operating level.
2. On a call for humidity, the heating elements are energized, causing the water to boil. The fill valve opens and closes as needed to maintain the operating water level.
3. During refill in tap/softened water systems, a portion of the surface water is skimmed off, carrying away precipitated minerals.
4. RO/DI water systems (systems using deionized water or water that has been treated using reverse osmosis) do not require skimming.
5. Steam created in the evaporating chamber flows through vapor hose or piping to the dispersion assembly, where it is discharged into the airstream.

Start-up checklist

If an item in the Start-up checklist below does not apply to your system, skip to the next item and continue the process.

- ☐ Read this manual and all other information that was provided with your humidifier.
- ☐ Verify that all field wiring is done according to the instructions in this manual and in the humidifier wiring diagram.
- ☐ Confirm that the input signal is consistent with the Vapor-logic controller's expected input signal. Input signals are listed in the Vapor-logic Setup menu. See “Installation Step 2: Setup” in the Vapor-logic Installation and Operation Manual.
- ☐ Confirm that proper grounding and an approved earth ground are provided.
- ☐ Turn on the water supply, and confirm that the drain valve is closed.
- ☐ Turn on power to the humidifier, and confirm the Main menu is displayed on the keypad/display. The display may take several seconds to appear as the controller powers up.
- ☐ Confirm in the Main Menu that the mode is “Auto” and that tank status is “Filling.”
- ☐ When “Filling” appears in main menu, confirm that the tank is filling with water.
- ☐ In the Status screen, confirm that the Duct Airflow Switch is closed.
- ☐ In the Status screen, confirm that the high limit humidistat input is closed or the high limit transmitter is connected.
- ☐ Make sure the tank has filled with water. See the “Damage from dry startup” Caution on Page 39.
- ☐ With sufficient water in the tank, the airflow switch closed, the high limit closed, and the humidifier getting a call for humidity, verify that the heater outputs are activated.
- ☐ Check the amp draw of the heaters. Refer to the humidifier wiring diagram for the proper rating.
- ☐ If you experience difficulties, have the keypad/display information available along with the serial number and humidifier Model, and call DriSteem Technical Support at 800-328-4447.

Start-up procedure

After the system is installed and connected properly:

1. Verify that the humidifier, controls, piping, electrical connections, steam supply, and dispersion units(s) are installed according to the following:
   - Installation instructions in this manual
   - Vapor-logic Installation and Operation Manual
     - Installation section
     - Pre-installation checklist
   - Ladder style wiring diagram (inside humidifier electrical panel cover)
   - External connections wiring diagram (inside humidifier electrical panel cover)
   - All governing codes
2. Verify that all electrical connections are secure before applying power.
3. Make sure all electrical covers are in place and secure. See Warning at right.
4. Verify that the humidifier is mounted level and securely supported before filling with water. See operating weights in Table 4-1.
5. Verify that the humidifier is level front to back and side to side after it is full of water.
6. Read the "Operation" section of the Vapor-logic Installation and Operation Manual.

   Note: During start-up, do not leave the humidifier unattended.
7. Perform all applicable "Start-up checklist" items. See Page 36.
8. Monitor humidifier operation through multiple fill cycles. The humidifier operating status appears on the keypad/display.
9. On tap/softened water units, water skims from the humidifier after every fill cycle. Adjust the amount of skim by increasing or decreasing the skim time (see the Vapor-logic Installation and Operation Manual).

   At start-up, DriSteem recommends initially running the humidifier with the factory default setting for skim time. See "Maintenance," beginning on Page 40.

The Vapor-logic Installation and Operation Manual is a comprehensive operation manual. Refer to it for information regarding the following features:

- Keypad/display setup and menu information
- Control input signals and functions
- Drain, flush, and skim features
- Safety features
- Alarm screens and fault messages

The manual was shipped with your humidifier and is available at our Web site: www.dristeem.com

⚠ WARNING

Electric shock hazard
Only qualified electrical personnel should perform start-up procedure.

Contact with energized circuits can cause property damage, severe personal injury or death as a result of electrical shock or fire.

Make sure that all electrical covers are in place and secure before turning on electrical power. These include the heater terminal cover, electrical panel cover, and subpanel access panels.

CAUTION

Damage from dry startup
In the event the humidifier tank does not contain water and the heaters are energized, turn main power off. Operation of the heaters without water will cause damage to the humidifier. Before turning main power on, verify that all wiring has been completed per the wiring instructions in this manual and the unit wiring diagrams.

Tap/softened water

The best way to determine how often your humidifier needs maintenance is to remove the tank cover and inspect it for mineral deposits after three months of duty. Hours of operation and duty cycle will determine your maintenance schedule, as will water quality.

WATER QUALITY AND MAINTENANCE

Maintenance requirements vary with water quality, because tap and softened water carry a variety of minerals and other materials in a mix that varies from location to location. Very hard (high mineral content) water requires more frequent cleaning and drain/flush cycles than water with low mineral content.

Softened water significantly reduces mineral accumulation inside the humidifier.

Note: Solids, like silica, are not removed in the softening process.

SKIM DURATION

Skim duration determines the quantity of water skimmed with each fill cycle and is field adjustable using the Vapor-logic keypad/display.

Skimming reduces the need for frequent humidifier cleaning. Each time the tank refills, it fills to a level just above the lip of the skim/overflow fitting. A portion of the fill water flows out of the skim/overflow fitting to the drain, which flushes minerals left by the previous evaporating cycle and skims away surface residue.

Both humidifier cleaning and heated water flowing to the drain are operational costs. DriSteem recommends that the user observe and adjust the skim duration to achieve a balance between reducing mineral buildup and conserving heated water.

mc_060210_1430

WARNING

Electric shock hazard

Contact with energized circuits can cause severe personal injury or death as a result of electric shock. To prevent shock, disconnect electrical power before performing service or maintenance procedures on an part of the humidification system.

When performing maintenance on the humidifier:

- Always switch the keypad control mode to Standby.
- Place all power disconnects in OFF position and lock in OFF position.
- Close the field-installed manual supply water shut-off valve.

WARNING

Hot surface and hot water hazard

Do not touch the tank or drain piping until the unit has had sufficient time to cool, or serious injury can occur.

Opening the drain valve when the tank is hot can discharge water with a temperature up to 212 °F (100 °C) into the plumbing system. This can cause damage to the plumbing system if the humidifier is not properly connected to a water tempering device such as a DriSteem Drane-kooler™.

Tap/softened water

COOL DOWN HUMIDIFIER

Before performing any maintenance, allow the tank to cool down. Fresh make-up water is used to speed up cooling. Do not close the manual water supply before cooling down the humidifier; otherwise the tank could stay hot for several hours.

- Insulated and uninsulated tanks will have hot surfaces.
- Verify that there is no call for humidity and that the aquastat set point (adjusted using the keypad/display Setup screens) is less than room temperature (default setting is 40 °F [4 °C]) so that the heaters do not energize while cooling down the tank.
- Models with a standard drain valve:
  - Manually open the drain valve by moving the valve lever located on the back of the drain valve to the manual open position. The fill valve eventually opens.
  - Let the fill water run until the tank is cooled, then shut off the field-installed manual supply water shut-off valve.
  - Let the tank drain, then manually close the drain valve.
- Models with optional drain valves:
  - For drain valves without the manual open lever, use the keypad to perform the cool down process.
  - Go to the control modes screen and select Manual Drain.
  - Allow approximately half the water to drain out of the tank.
  - In the Control Modes screen select Auto; the fill valve opens and the humidifier cools down.
  - When the fill valve closes, select Manual Drain in the Control Modes screen and let the tank drain dry. The humidifier should be cool enough to work on.
  - For more information about using the keypad, see the Vapor-logic Installation and Operation Manual.

INSPECTION AND MAINTENANCE

1. **Annually** (also recommended when maintenance is performed)
   - Inspect tank and gaskets for leaks.
   - Measure current draw of heaters and verify amp values per stage by comparing to the wiring diagram located inside the subpanel cover. This identifies any burned out heaters. Only qualified electrical personnel should perform this task.
   - All safety devices in the control circuit should be cycled on and off to verify they are functioning. These include:
     - High limit switch
     - Airflow proving switch
     - Low water level probe. Pull out probe plug; fill valve should energize.

FIGURE 39-1: COVER ENCLOSURE SCREW CAP DETAIL

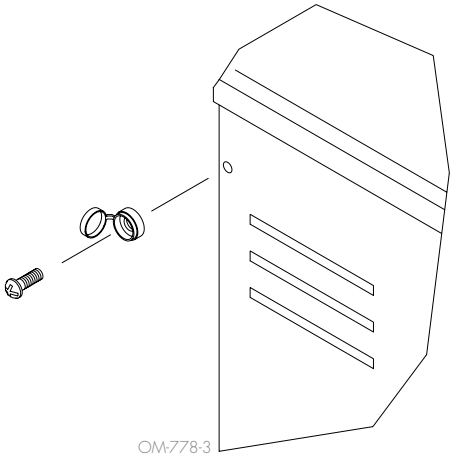

Humidifier De-scaling Solution

Scale buildup on humidifier heaters acts as an insulator, reducing humidifier performance while increasing energy costs. To keep humidifiers operating as efficiently as possible, remove scale with DriSteem's Humidifier De-scaling Solution, available for purchase from your DriSteem representative or distributor.

The De-scaling Solution cleans without risk of corroding humidifier tanks or welds. The De-scaling Solution also cleans surfaces unreachable by hand scraping.

DriSteem's Humidifier De-scaling Solution is the only approved cleaner/de-scaler for use with DriSteem humidifiers. Use of other cleaners/de-scalers may void your DriSteem warranty.

Tap/softened water

2. **Seasonally** (or as required, depending on water quality)
   - Remove the evaporating chamber:
     - Remove the two fasteners on each side of the cover enclosure (see Figure 41-1).
     - Remove the enclosure. See "Electric shock hazard" Warning at right.

     Note: If the humidifier has an SDU mounted directly above it, remove the SDU cover before removing the humidifier cover.
     - If the tank is hot, cool it down first. See "Cool down humidifier" on Page 41.
     - Shut off the water supply.
     - Allow the tank to drain completely.
     - Shut off the electrical supply.
     - Disconnect the fill line at the supply side of the fill valve.
     - Disconnect the electrical plugs between the tank components and the back of the electrical panel (includes: power plug, fill plug, drain plug, water level control plug, tank temperature sensor plug, and thermal trip plug).

     Important: Disconnect by pulling on plug housing. Do not disconnect by pulling on cord or wires.
     - Disconnect the drain union on the back left corner of the frame.
     - Disconnect the steam supply hose from the top of the tank.
     - Lift the tank foot above the frame flange, and slide the tank assembly forward to remove.
   - Loosen the four cover bolts and remove the cover assembly from the tank.
   - Clean the tank interior using a putty knife or similar flat instrument.
   - Clean and inspect probe rod assembly:
     - Unplug the probe plug assembly, and leave ground wire connected to tank.
     - Unscrew probe rod assembly using the probe tool (see Figure 40-1), and clean plastic probe housing, ensuring that all passageways for water flow are clear.
     - Clean probe rods using steel wool or similar mild abrasive material.
     - Inspect composite plastic probe housing. If any signs of cracking, roughness, or deterioration, replace assembly.
     - When sliding probe housing into bracket from which it hangs, orient housing so neither water flow slot directly faces tank wall at back end of bracket.

mc_061610_1500

⚠ WARNING

Electric shock hazard
Do not remove humidifier electrical panel cover, heater terminal cover, or subpanel access panels until electrical power is disconnected. Improper wiring or contact with energized circuits can cause property damage, severe personal injury, or death as a result of electric shock and/or fire.

Only qualified electrical personnel should perform maintenance procedures.

FIGURE 40-1: PROBE TOOL

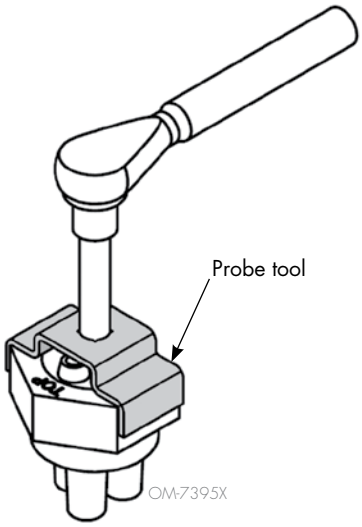

Remove and install probe assembly with supplied probe tool. Attach a 3/8" square drive to the probe tool.

When installing, torque probe assembly to 120 in-lbs (10 ft-lbs; 13.6 N-m). Probe tools can be ordered from your DriSteem representative (Part No. 185101).

Tap/softened water

- Install the probe and probe plug assembly. Verify ground wire is solidly connected to tank.
- Secure the chamber cover, making sure the cover gasket is seated and the chamber is sealed.
- Re-install evaporating chamber:
  - Reconnect the fill line.
  - Reconnect electrical plugs (the plugs are color coded).
  - Reconnect the drain union.
  - Reconnect the steam hose.
- Verify electrical connections:
  - Verify that all DIN rail-mounted components are securely fastened to DIN rail.
  - Verify that all power terminal screws and lugs are tight from power block to heaters.
  - Verify that all plugs under the humidifier cover are completely plugged in.
- Move the drain valve lever back to the auto position.
- Turn on the water supply.
- Turn on the electrical power.

3. Off-season maintenance

- Perform complete inspection and cleaning of the following:
  - Heaters
  - Probe rods
  - Skimmer port and water seal
  - Humidifier tank
- After cleaning, the humidifier should remain empty until humidification is required.

OFF-SEASON SHUT-DOWN PROCEDURE

1. Switch off electrical power.
2. Remove the enclosure.
3. Shut off the water supply to the makeup valve.
4. Drain the evaporating chamber, and clean if necessary following the instructions in this manual.
5. Replace the enclosure.
6. Leave the evaporating chamber dry, the power off, and the water shut-off valve closed until the next humidification season.

RO/DI water option

RO/DI humidifiers use RO/DI water. Because these water types are mineral free, cleaning the evaporating chamber should not be necessary. However, there are some maintenance steps that should be followed to ensure all parts of the unit are in working order.

Important: Verify regularly that water processing equipment is operating correctly. The presence of chlorides in improperly processed deionized water will eventually cause pitting and failure of the humidifier tank and its components. Damage caused by chloride corrosion is not covered by your DriSteem warranty.

WARNING

Electric shock hazard
Do not remove humidifier electrical panel cover, heater terminal cover, or subpanel access panels until electrical power is disconnected. Improper wiring or contact with energized circuits can cause property damage, severe personal injury, or death as a result of electric shock and/or fire.

Only qualified electrical personnel should perform maintenance procedures.

COOL DOWN HUMIDIFIER

If the tank is hot, cool it down by opening the manual ball valve on the side of the tank. The float valve will open allowing cool water to run into the tank until it is cool enough to handle. Then shut off the water supply, and allow the tank to drain completely.

INSPECTION AND MAINTENANCE

1. Remove the evaporating chamber:
   - Remove the two fasteners on each side of the cover enclosure. See Figure 41-1.
   - Remove the enclosure. See “Electric shock hazard” Warning at left.

   Note: If the humidifier has an SDU mounted directly above it, remove the SDU cover before removing the humidifier cover.

   - If the tank is hot, follow the instructions in “Cool down humidifier” above before proceeding.
   - Shut off the water supply.
   - Allow the tank to drain completely.
   - Shut off the electrical supply.
   - Disconnect the fill line at the fill fitting.
   - Disconnect the electrical plugs between the tank components and the back of the electrical panel (includes: power plug, low water switch plug, tank temperature sensor plug and thermal trip plug).

     Important: Disconnect by pulling on plug housing. Do not disconnect by pulling on cord or wires.
   - Disconnect the drain union on the back left corner of the frame.
   - Disconnect the steam supply hose from the top of the tank.
   - Lift the tank foot above the frame flange and slide the tank assembly forward to remove.

WARNING

Hot surface and hot water hazard
Do not touch the tank or drain piping until the unit has had sufficient time to cool, or serious injury can occur.

Opening the drain valve when the tank is hot can discharge water with a temperature up to 212 °F (100 °C) into the plumbing system. This can cause damage to the plumbing system if the humidifier is not properly connected to a water tempering device such as a DriSteem Drane-kooler™.

RO/DI water option

2. Loosen the four cover bolts and remove the cover assembly from the tank.
3. Inspect the tank interior for debris or pitting.
4. Inspect the valve inlet for debris.
5. Check the operation of the float valve and the condition of the float seat.
6. Check the low water switch to make sure the float slides freely on the stem.
7. Secure the chamber cover making sure the cover gasket is seated and the chamber is sealed.
8. Reinstall the evaporating chamber.
   - Reconnect the fill line.
   - Reconnect electrical plugs (the plugs are color coded).
   - Reconnect drain union.
   - Reconnect steam hose.
9. Verify electrical connections:
   - Verify that all DIN rail-mounted components are securely fastened to DIN rail.
   - Verify that all power terminal screws and lugs are tight from power block to heaters.
   - Verify that all plugs under the humidifier cover are completely plugged in.
10. Close the drain valve.
11. Turn on the water supply.
12. Turn on the electrical power.

WARNING

Electric shock hazard
Contact with energized circuits can cause severe personal injury or death as a result of electric shock. To prevent shock, disconnect electrical power before performing service or maintenance procedures on an part of the humidification system.

When performing maintenance on the humidifier:

- Always switch the keypad control mode to Standby.
- Place all power disconnects in OFF position and lock in OFF position.
- Close the field-installed manual supply water shut-off valve.

OFF-SEASON SHUT-DOWN PROCEDURE

1. Switch off electric power.
2. Remove the enclosure.
3. Shut off the water supply to the makeup valve.
4. Drain the evaporating chamber by opening the drain valve. For units with an end-of-season drain, refer to the Vapor-logic Installation and Operation Manual.
5. Replace the enclosure.
6. Leave the evaporating chamber dry, the power off, and the water shut-off valve closed until the next humidification season.

Humidifier

FIGURE 44-1: VAPORMIST HUMIDIFIER REPLACEMENT PARTS

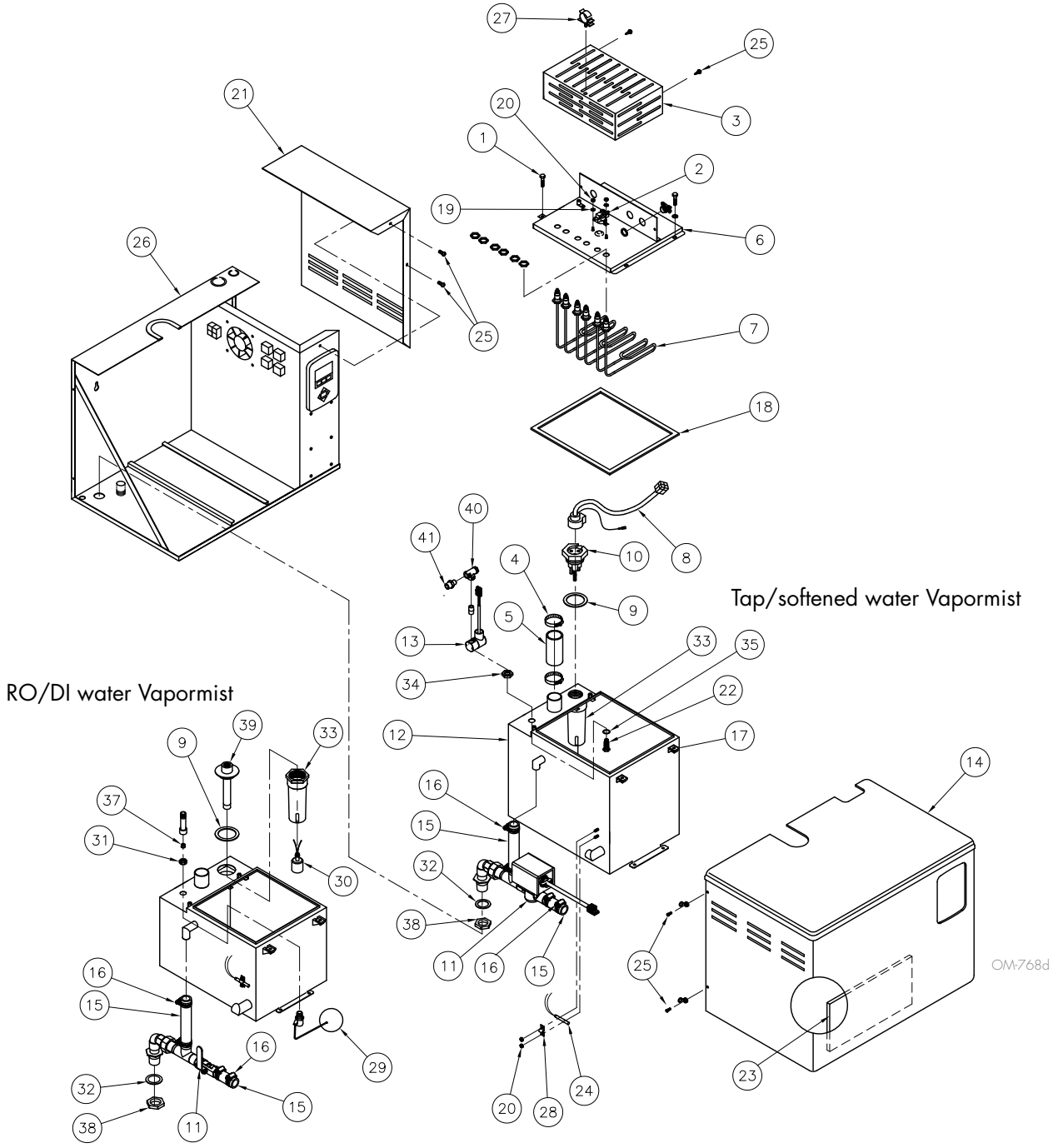

Humidifier

Table 45-1:
Vapormist humidifier replacements parts

No.	Description	Qty.	Part No.	No.	Description	Qty.	Part No.
1	Head bolt, large Phillips, ¼ - 20 × 1"	4	700300-013	19	Washer, No. 8 external tooth, pltd	2	700200-003
2	Thermo cut-out	1	409560-001	20	Nut, 8-32 hex, pltd	6	700200-002
3	Cover, heater terminal	1	*	21	Cover, humidifier electrical panel	1	120277
4	Hose clamp, 2"	2	700560-200	22	Fill adapter, VM-2 through VM-4	1	160226-041
5	Hose cuff, 1½"	1	305390- *		Fill adapter, VM-6 through VM-16	1	160224-041
	Hose cuff, 2"	1	305391- *		Fill adapter, VM-21 through VM-34	1	160224-052
6	Cover, tank	1	*	23	Insulation, panel	1	309845-003
7	Heater element	*	*	24	Sensor, temperature	1	197000-025
8	Probe assembly with cord and plug	1	406050-100	25	Screw, Phillips head, 8-32 × ½"	8	700170-007
9	Gasket, 2.50" OD × 1.90" ID	1	309750-004	26	Frame assembly, chassis	1	165541
10	Probe assembly	1	406303- *	27	Clip, wire harness	1	405892-001
11	Valve, ¾" electric, 24V	1	505400-001	28	Clip, temperature sensor	1	408251
	Valve, ½" SST ball	1	505000-003	29	Valve assembly, float	1	505310
	Drain, ¼" NPT E.O.S., 24V solenoid SST w/ DIN plug (not shown)	1	505086-003	30	Switch, float, 1/8" NPT	1	408420-002
12	Tank weldment	1	*	31	Ring, seal, ¼"-18 NPT	1	306365
13	Fill valve	1	197000-010	32	Gasket, bulkhead, 1.60 OD × 1.15 ID	1	309750-005
14	Cabinet enclosure	1	330001-001	33	Probe housing, nylon	1	308500
15	Hose, ¾" ID	2	307020-002	34	Nut, heater .475	1	409601-001
16	Hose clamp, ¾"	4	700560-075	35	O-ring, 5/8" EPDM No. 016	1	300400-009
17	Nut assembly, ¼-20, VM-2 through VM-4	4	700650	37	DI orifice, VM-2 through VM-16	1	160229-041
	Nut assembly, ¼-20, VM-6 through VM-34	2	700650		DI orifice, VM-21 through VM-34	1	160229-052
18	Cover, tank gasket, VM-2 through VM-4	1	160695-001	38	Bulkhead nut	1	162721-002
	Cover, tank gasket, VM-6 through VM-34	1	160695-002	39	Tube weld, low water, short, VM-2 through VM-4	1	167787
					Tube weld, low water, long, VM-6 through VM-34	1	167788
				40	Sediment strainer	1	300050

* Specify humidifier model and serial numbers when ordering.

SDU-E

FIGURE 46-1: SDU-E REPLACEMENT PARTS

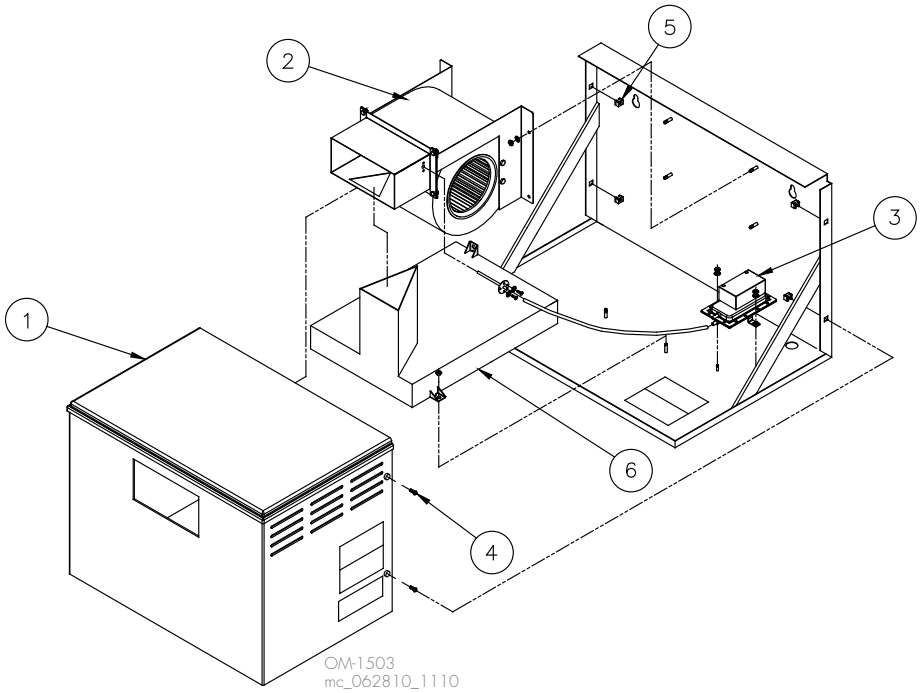

Table 46-1:
SDU-E replacement parts

No.	Description	Qty.	Part No.
1	Shroud	1	330002-001
2	Blower, SDU external assembly	1	*
3	Switch, airflow	1	406190
4	Screw, 8-32 × ½" Phillips, black	4	700170-007
5	Nut retainer, 8-32	4	409593-001
6	Dispersion chamber for SDU with 1½" outlet	1	160445-003
	Dispersion chamber for SDU with 2" outlet	1	160445-004

* This is an assembly of multiple parts.

mc_062810_1112

SDU-I

FIGURE 47-1: SDU-I REPLACEMENT PARTS

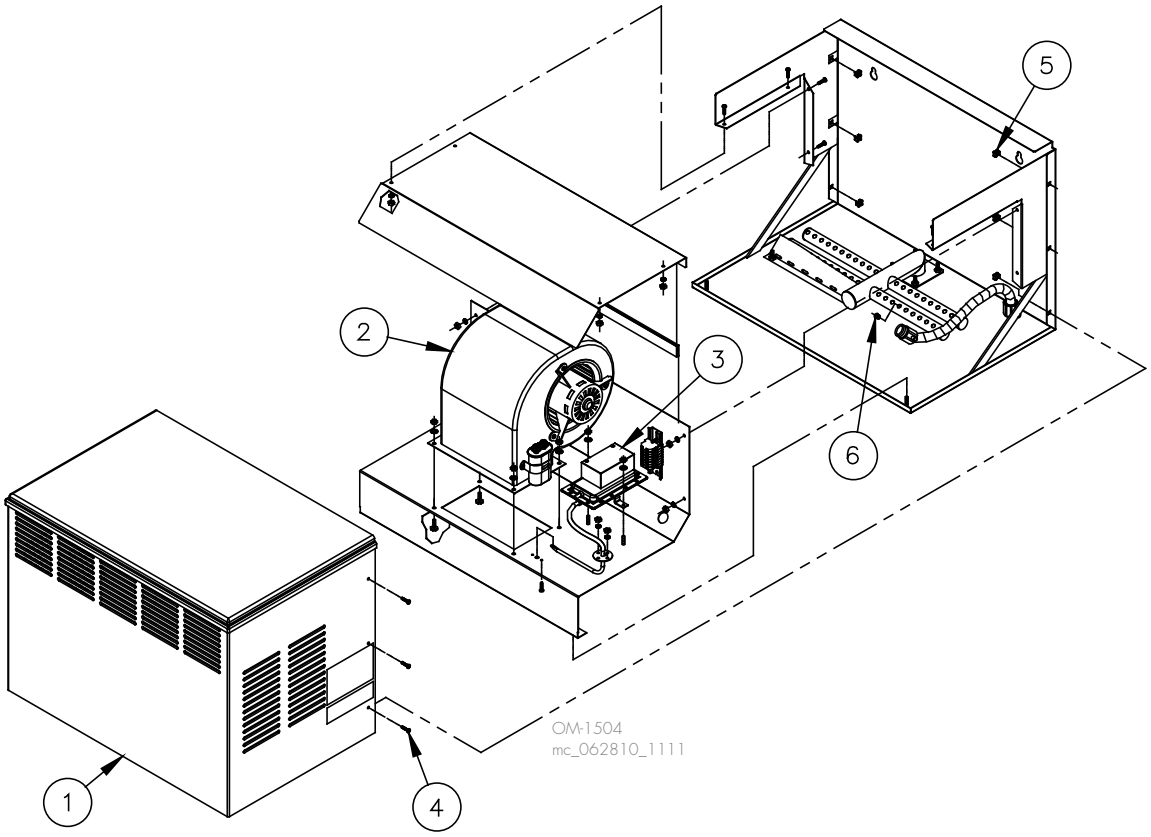

Table 47-1:
SDU-I replacement parts

No.	Description	Qty.	Part No.
1	Shroud	1	330001-002
2	Blower, SDU external assembly	1	*
3	Switch, airflow	1	406190
4	Screw, 8-32 × ½" Phillips, black	6	700170-007
5	Nut retainer, 8-32	6	409593-001
6	Tubelet, 0.375" × 0.375" molded	44	310280-006
* This is an assembly of multiple parts.			

mc_062810_1113

Subpanel

FIGURE 48-1: VAPORMIST SUBPANEL WITH SSR

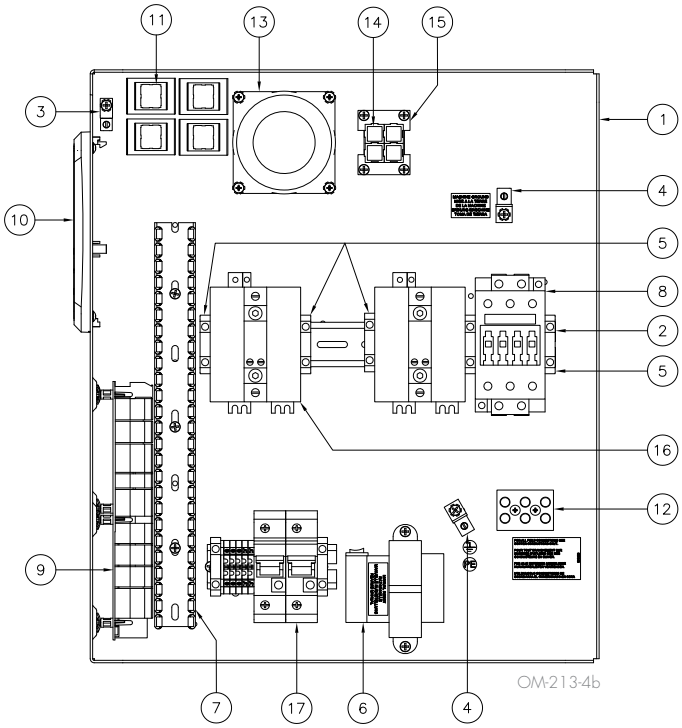

Table 48-1:
Vapormist subpanel with SSR

No.	Description	Qty.	Part No.	No.	Description	Qty.	Part No.
1	Subpanel, barrier	1	120801	9	Board, Vapor-logic main microprocessor	1	408496-006
2	DIN rail, 11" long	1	167765-011	10	Board, Vapor-logic keypad/display	1	408495-002
3	Lug wire	2	409250-003	11	Plug, 4-prong female	4	409585-008
4	Ground lug, medium	2	409250-027	12	Terminal block, 3-pole	1	408300-002
5	Block, DIN rail terminal end	3	408252-006	13	Fan, cooling	1	408677-001
6	Transformer 120/208/240/480 V	1	408965-001	14	Housing, 75 Amp white connector	4	409585-001
	Transformer 600 V	1	408986	15	Plate, plug retainer	2	409585-009
7	Wire channel, 1" × 1"	12.5"	408999-001	16	SSR, 50 Amp, 1-pole	*	408679-001
	Wire channel cover	12.5"	408999-002		SSR, 50 Amp, 2-pole	*	408679-003
8	Contactor	1	407010-*	17	Circuit breaker	*	406775- *

* Refer to model for correct selection and quantity.

Subpanel

FIGURE 49-1: VAPORMIST SUBPANEL WITH SDU

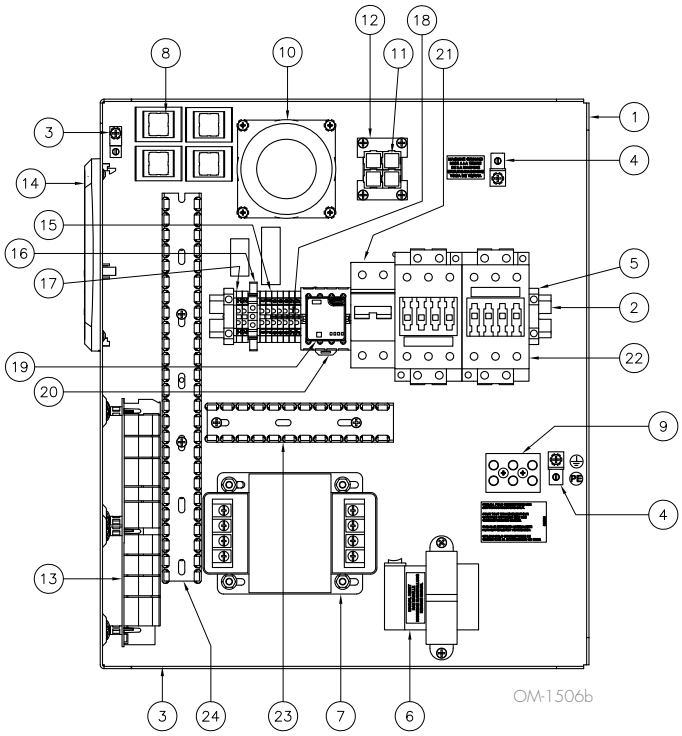

Table 49-1:
Vapormist subpanel with SDU

No.	Description	Qty.	Part No.
1	Subpanel, barrier	1	120801
2	DIN rail, 11" long	1	167765-011
3	Lug wire	2	409250-003
4	Ground lug, medium	2	409250-027
5	Block, DIN rail terminal end	2	408252-006
6	Transformer 120/208/240/480 V	1	408965-001
	Transformer 600 V	1	408986
7	Transformer, 240/480 V, 300 VA	1	408991
	Transformer, 230/460/575 V, 300VA	1	408992
	Transformer, 480 V, 500 VA	1	408996-008
	Transformer, 600 V, 500 VA	1	408996-009
8	Plug, 4-prong female	4	409585-008
9	Terminal block, 3-pole	1	408300-002
	Terminal block, 4-pole	1	408300-003
10	Fan, cooling	1	408677-001
11	Housing, 75 Amp white connector	4	409585-001
12	Plate, plug retainer	2	409585-009
13	Board, Vapor-logic main microprocessor	1	183504-015
14	Board, Vapor-logic keypad/display	1	408495-002
15	Terminal, DIN rail mount	9	408252-001
16	Terminal, ground	1	408252-010
17	End cap, DIN rail mount	2	408252-005
18	Jumper, marathon terminal	2	408252-009
19	Relay, 24V DPDT finder	*	407900-016
20	Relay socket	*	407900-019
21	Circuit breaker	*	406775- *
22	Contactor	1	407010- *
23	Channel, wire cover	6"	408999-002
	Channel, wire	6"	408999-001
24	Channel, wire cover	12.5"	408999-002
	Channel, wire	12.5"	408999-001

* Refer to model for correct selection and quantity.

Expect quality from the industry leader

For more than 45 years, DriSteem has been leading the industry with creative and reliable humidification solutions. Our focus on quality is evident in the construction of the Vapormist humidifier, which features cleanable, stainless steel construction. DriSteem also leads the industry with a Two-year Limited Warranty and optional extended warranty.

For more information
www.dristeem.com
sales@dristeem.com

For the most recent product information visit our Web site: www.dristeem.com

DriSteem Corporation

DriSteem U.S. operations are ISO 9001:2015 certified

U.S. Headquarters:
14949 Technology Drive
Eden Prairie, MN 55344
800-328-4447 or 952-949-2415
952-229-3200 (fax)

European office:
Marc Briers
Grote Hellekensstraat 54 b
B-3520 Zonhoven
Belgium
+3211823595 (voice)
+3211817948 (fax)
E-mail: marc.briers@dristeem.com

Continuous product improvement is a policy of DriSteem Corporation; therefore, product features and specifications are subject to change without notice.

DriSteem, DriCalc, Rapid-sorb, Ultra-sorb, Vapor-logic, and Vapormist are registered trademarks of Research Products Corporation and are filed for trademark registration in Canada and the European community.

Drane-kooler is a trademark of DriSteem Corporation.

Product and corporate names used in this document may be trademarks or registered trademarks. They are used for explanation only without intent to infringe.

© 2020 Research Products Corporation

Intertek

Form No. VM-IOM-EN-REVM-0620
Part No. 890000-201 Rev M

Two-year Limited Warranty

DriSteem Corporation ("DriSteem") warrants to the original user that its products will be free from defects in materials and workmanship for a period of two (2) years after installation or twenty-seven (27) months from the date DriSteem ships such product, whichever date is the earlier.

If any DriSteem product is found to be defective in material or workmanship during the applicable warranty period, DriSteem's entire liability, and the purchaser's sole and exclusive remedy, shall be the repair or replacement of the defective product, or the refund of the purchase price, at DriSteem's election. DriSteem shall not be liable for any costs or expenses, whether direct or indirect, associated with the installation, removal or reinstallation of any defective product. The Limited Warranty does not include cylinder replacement for electrode steam humidifiers.

DriSteem's Limited Warranty shall not be effective or actionable unless there is compliance with all installation and operating instructions furnished by DriSteem, or if the products have been modified or altered without the written consent of DriSteem, or if such products have been subject to accident, misuse, mishandling, tampering, negligence or improper maintenance. Any warranty claim must be submitted to DriSteem in writing within the stated warranty period. Defective parts may be required to be returned to DriSteem.

DriSteem's Limited Warranty is made in lieu of, and DriSteem disclaims all other warranties, whether express or implied, including but not limited to any IMPLIED WARRANTY OF MERCHANTABILITY, ANY IMPLIED WARRANTY OF FITNESS FOR A PARTICULAR PURPOSE, any implied warranty arising out of a course of dealing or of performance, custom or usage of trade.

DRI-STEEM SHALL NOT, UNDER ANY CIRCUMSTANCES BE LIABLE FOR ANY DIRECT, INDIRECT, INCIDENTAL, SPECIAL OR CONSEQUENTIAL DAMAGES (INCLUDING, BUT NOT LIMITED TO, LOSS OF PROFITS, REVENUE OR BUSINESS) OR DAMAGE OR INJURY TO PERSONS OR PROPERTY IN ANY WAY RELATED TO THE MANUFACTURE OR THE USE OF ITS PRODUCTS. The exclusion applies regardless of whether such damages are sought based on breach of warranty, breach of contract, negligence, strict liability in tort, or any other legal theory, even if DriSteem has notice of the possibility of such damages.

By purchasing DriSteem's products, the purchaser agrees to the terms and conditions of this Limited Warranty.

Extended warranty

The original user may extend the term of the DriSteem Limited Warranty for a limited number of months past the initial applicable warranty period and term provided in the first paragraph of this Limited Warranty. All the terms and conditions of the Limited Warranty during the initial applicable warranty period and term shall apply during any extended term. An extended warranty term of an additional twelve (12) months or twenty four (24) months of coverage may be purchased. The extended warranty term may be purchased until eighteen (18) months after the product is shipped, after which time no extended warranties are available.

Any extension of the Limited Warranty under this program must be in writing, signed by DriSteem, and paid for in full by the purchaser.

mc_051308_0630