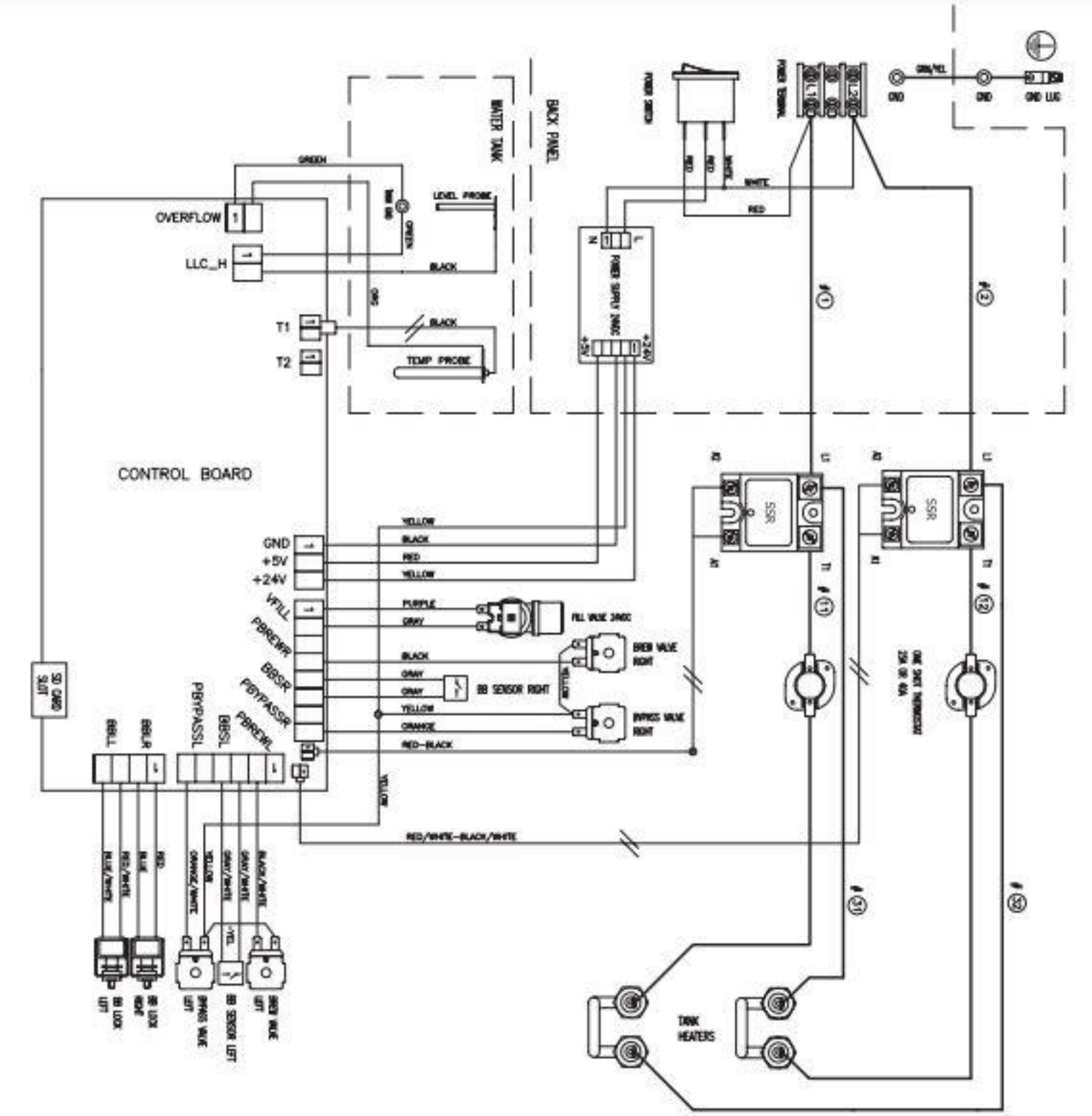
WATER TANK
BACK PANEL
OVERFLOW
LLC_H
LEVEL PROBE
T1
T2
TEMP PROBE
CONTROL BOARD
GND
+5V
+24V
VFILL
PBREWR
BBSSR
PBYPASSR
PBREWL
BBSL
PBYPASSL
BBRL
BBRR
SD CARD SLOT
FILL VALVE 24VDC
BREW VALVE RIGHT
BB SENSOR RIGHT
BYPASS VALVE RIGHT
RED/WHITE-BLACK/WHITE
BLACK/WHITE
GRAY/WHITE
YELLOW
ORANGE/WHITE
RED/WHITE
BLUE
RED
BB LOCK LEFT
BB LOCK RIGHT
BYPASS VALVE LEFT
BB SENSOR LEFT
BREW VALVE LEFT
SSR
TANK HEATERS
GND
GND LUG
YELLOW
WHITE
RED
BLACK
GREEN
POWER SWITCH
POWER SUPPLY 24VDC
POWER TERMINAL
L1
L2
N
+24V
+5V
#1
#2
#11
#12
#51
#52
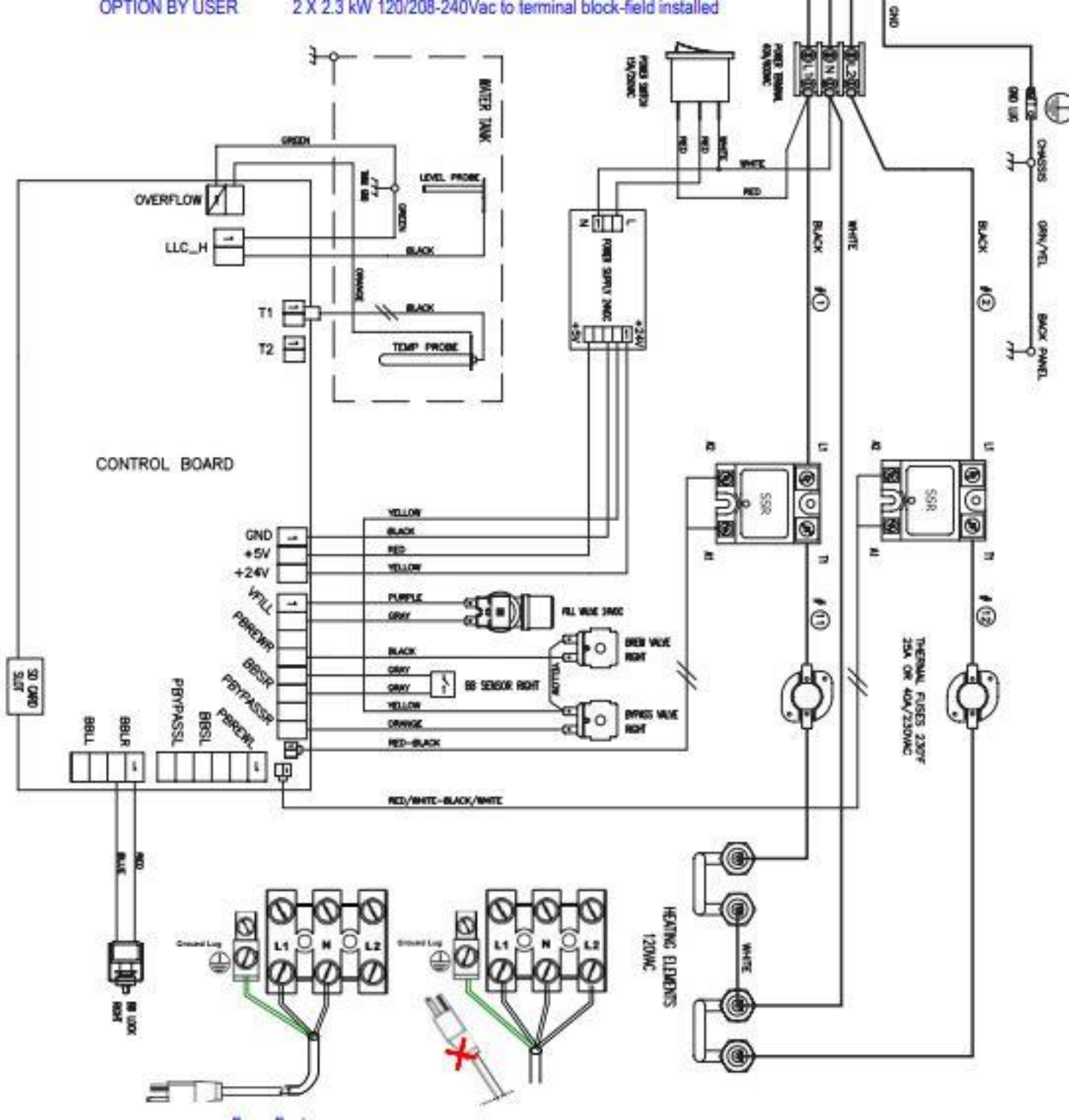
OPTION BY USER 2 X 2.3 kW 120/208-240Vac to terminal block-field installed