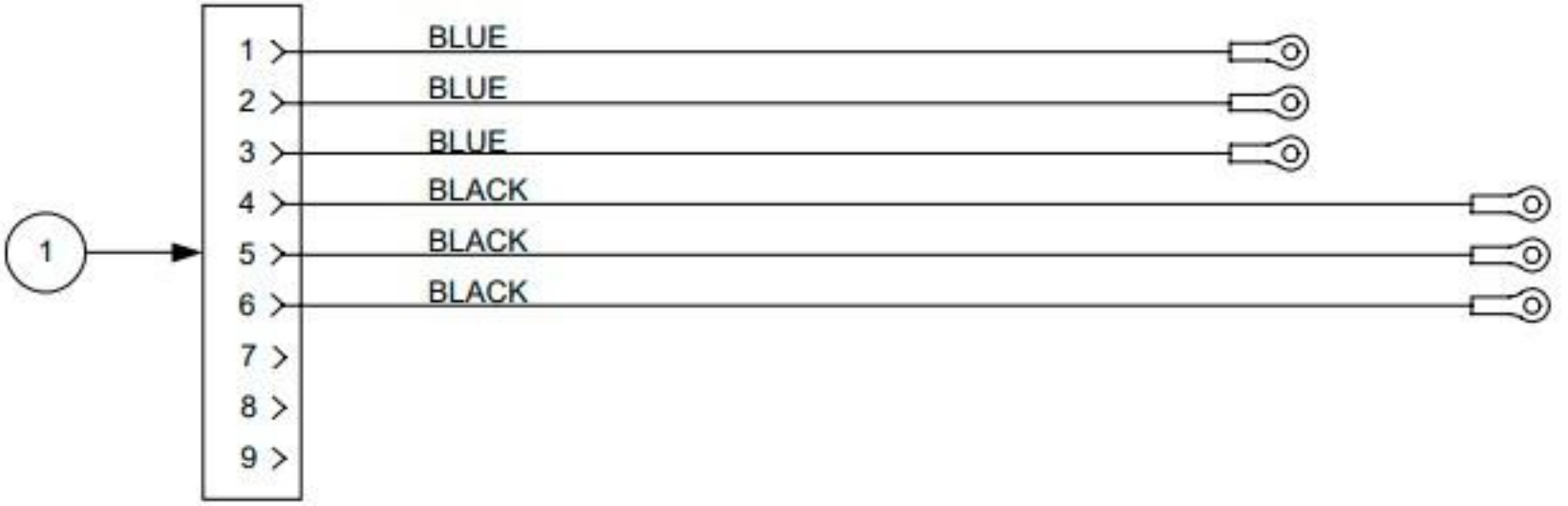
1
1
2
3
4
5
6
7
8
9
BLUE
BLUE
BLUE
BLACK
BLACK
BLACK

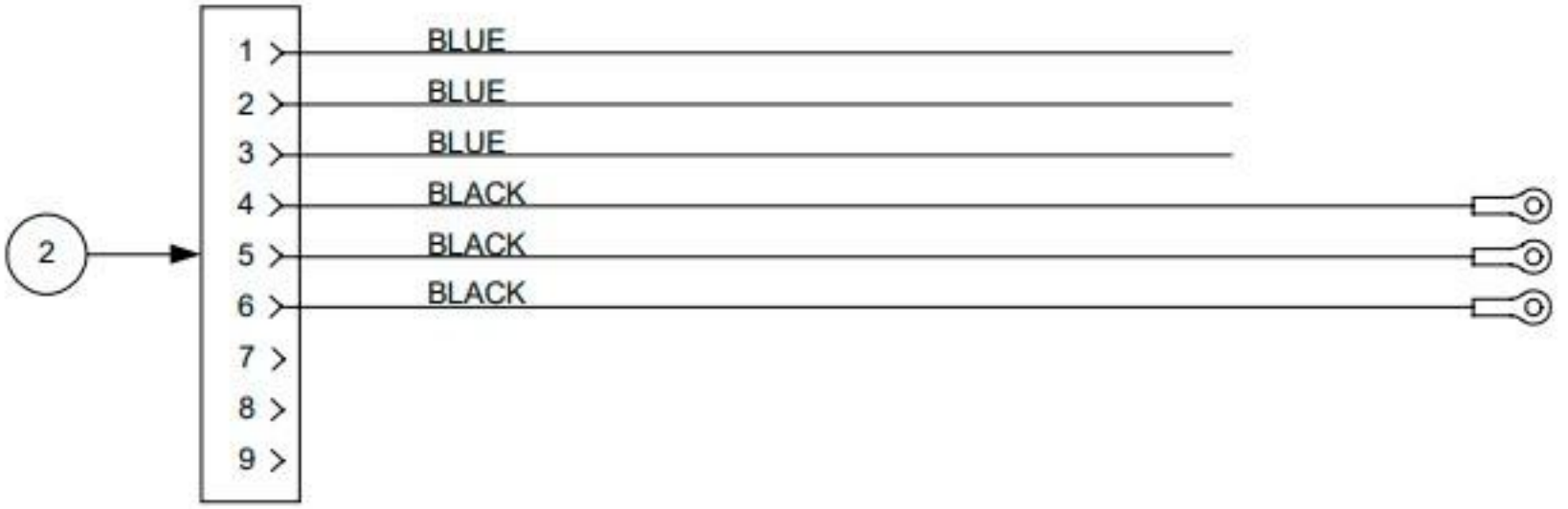
2
1
2
3
4
5
6
7
8
9
BLUE
BLUE
BLUE
BLACK
BLACK
BLACK

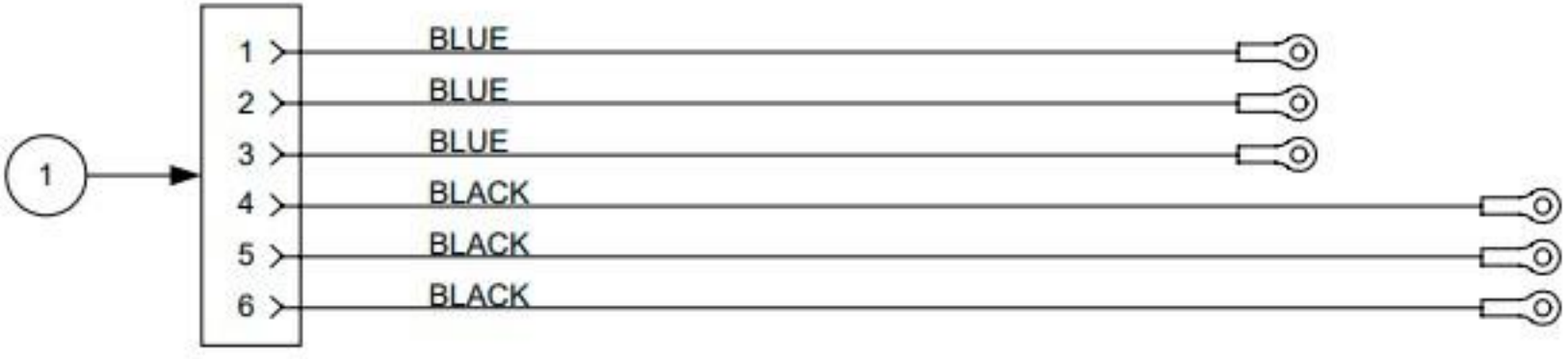
1
1
2
3
4
5
6
BLUE
BLUE
BLUE
BLACK
BLACK
BLACK

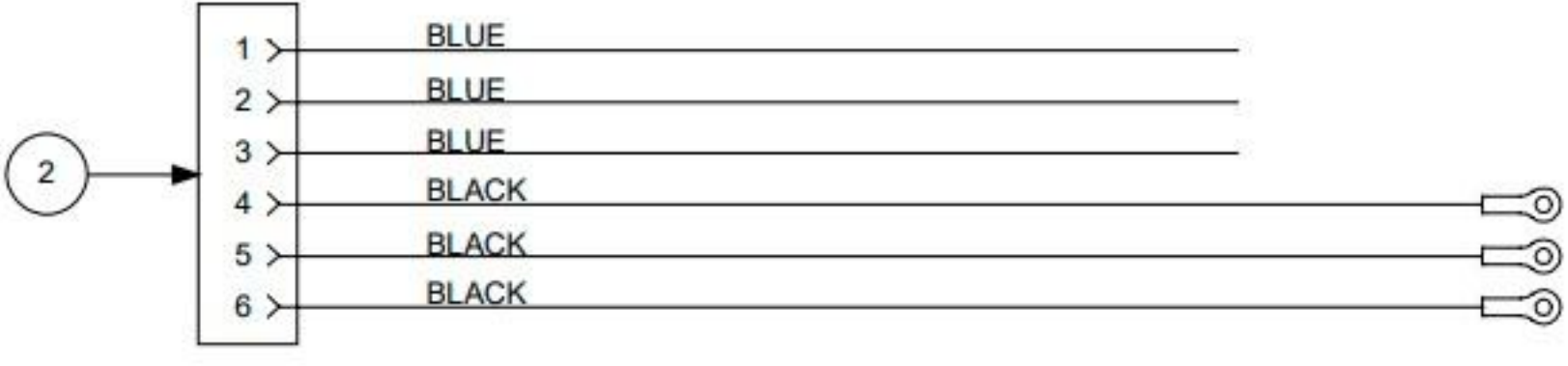
2
1
2
3
4
5
6
BLUE
BLUE
BLUE
BLACK
BLACK
BLACK

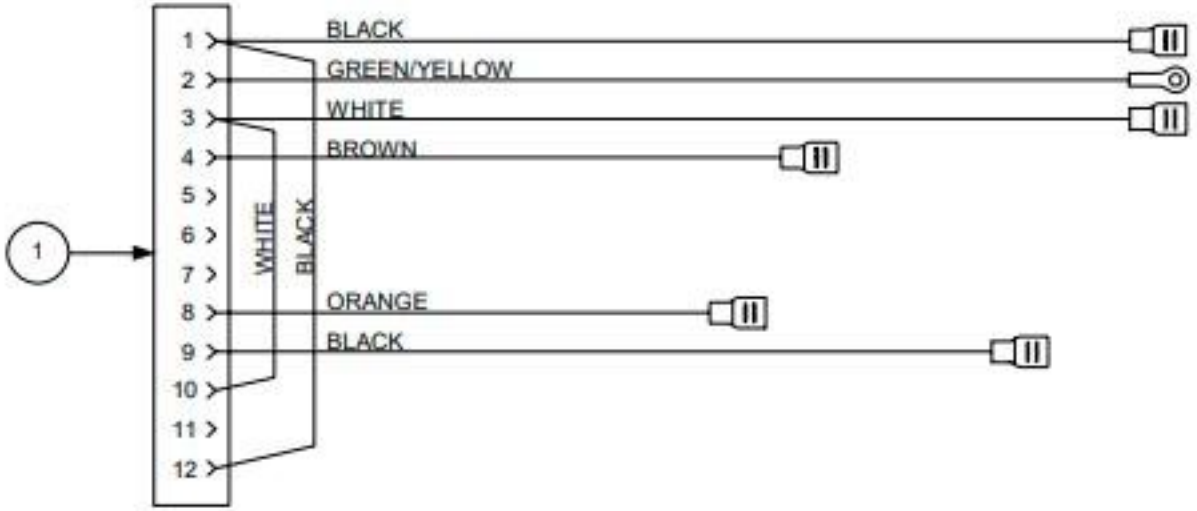
1
1
2
3
4
5
6
7
8
9
10
11
12
BLACK
GREEN/YELLOW
WHITE
BROWN
WHITE
BLACK
ORANGE
BLACK

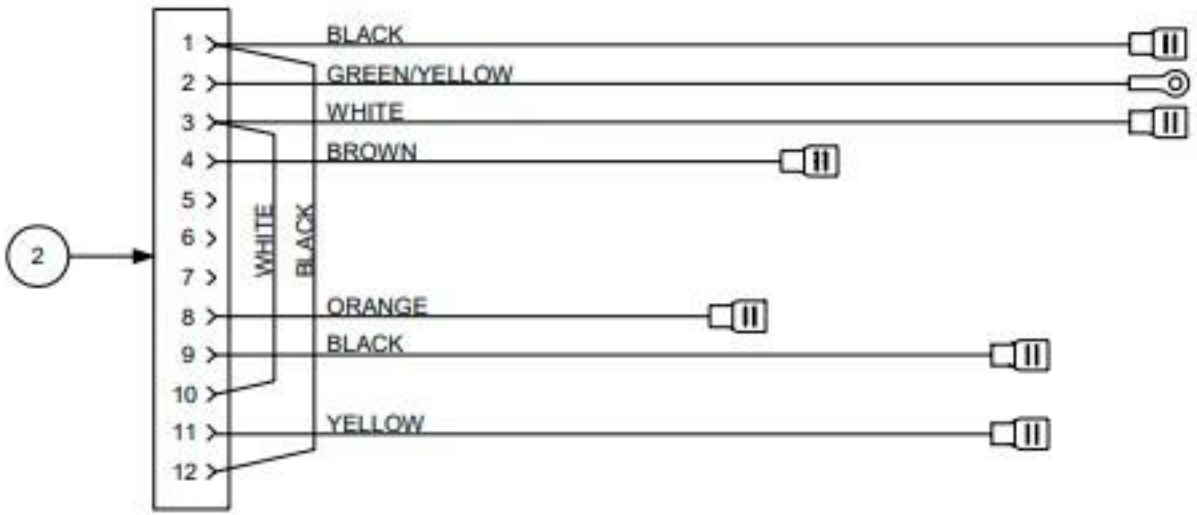
2
1
2
3
4
5
6
7
8
9
10
11
12
BLACK
GREEN/YELLOW
WHITE
BROWN
WHITE
BLACK
ORANGE
BLACK
YELLOW

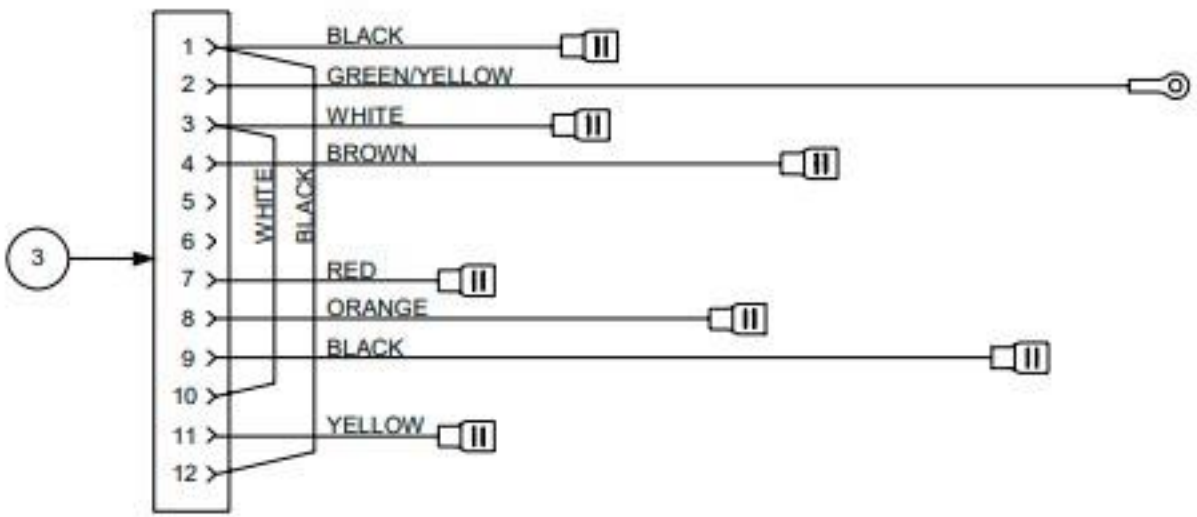
3
1
2
3
4
5
6
7
8
9
10
11
12
BLACK
GREEN/YELLOW
WHITE
BROWN
WHITE
BLACK
RED
ORANGE
BLACK
YELLOW

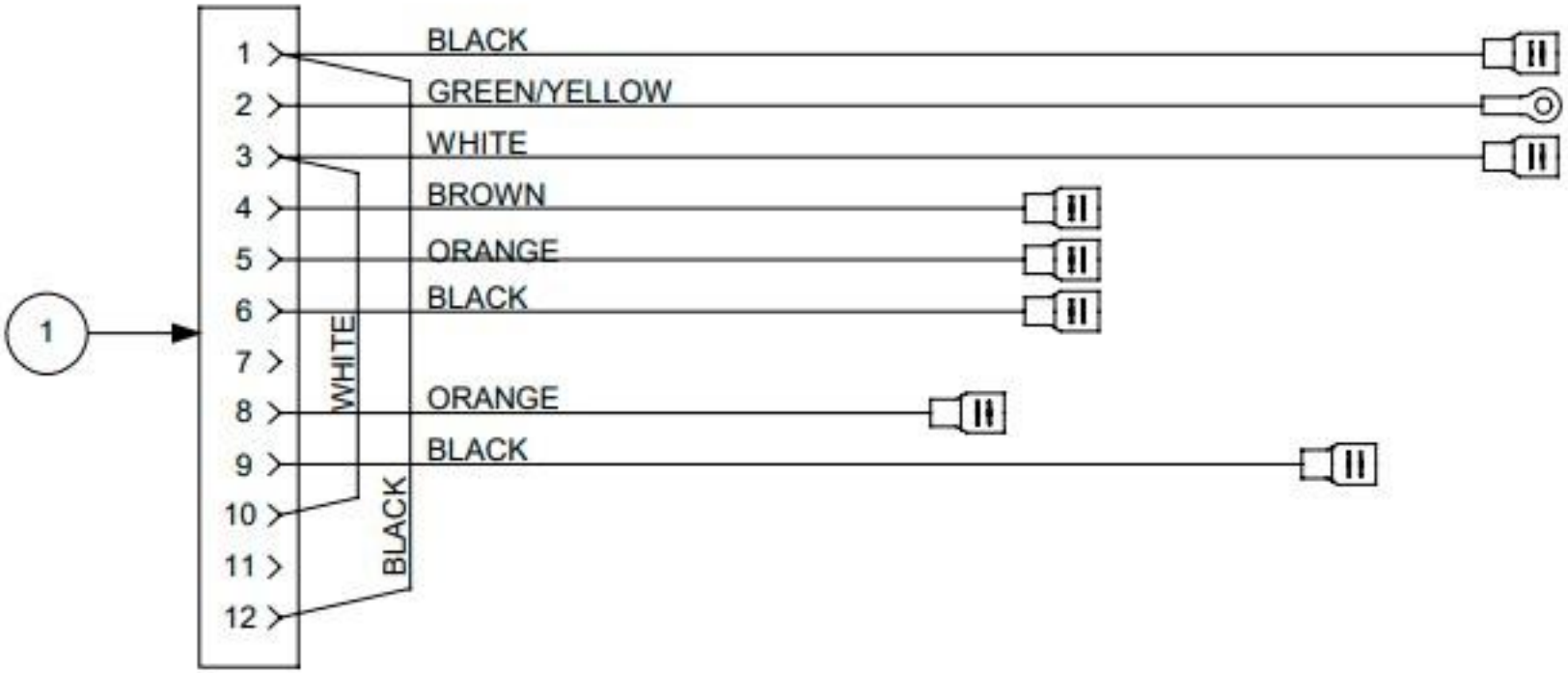
1
1
2
3
4
5
6
7
8
9
10
11
12
BLACK
GREEN/YELLOW
WHITE
BROWN
ORANGE
BLACK
ORANGE
BLACK
WHITE
BLACK

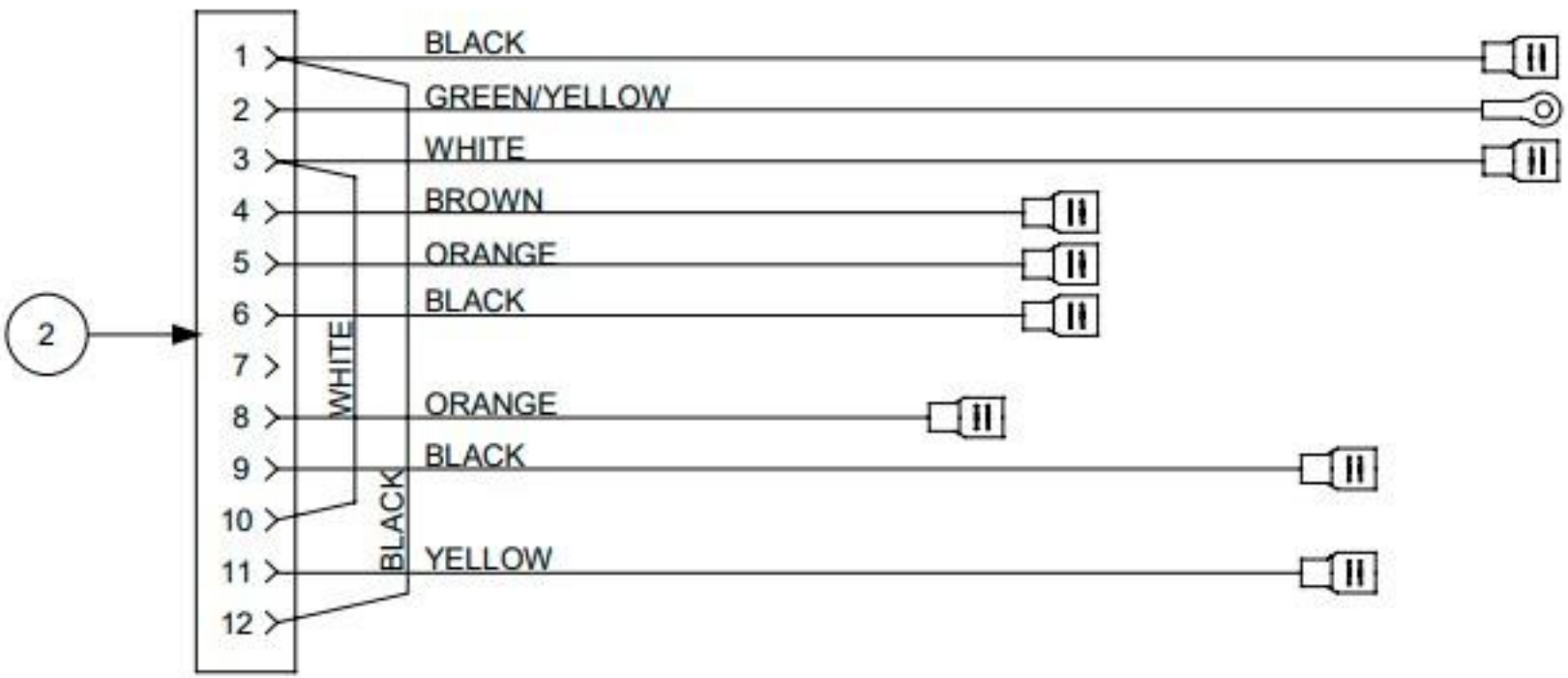
2
1
2
3
4
5
6
7
8
9
10
11
12
BLACK
GREEN/YELLOW
WHITE
BROWN
ORANGE
BLACK
ORANGE
BLACK
YELLOW
WHITE
BLACK

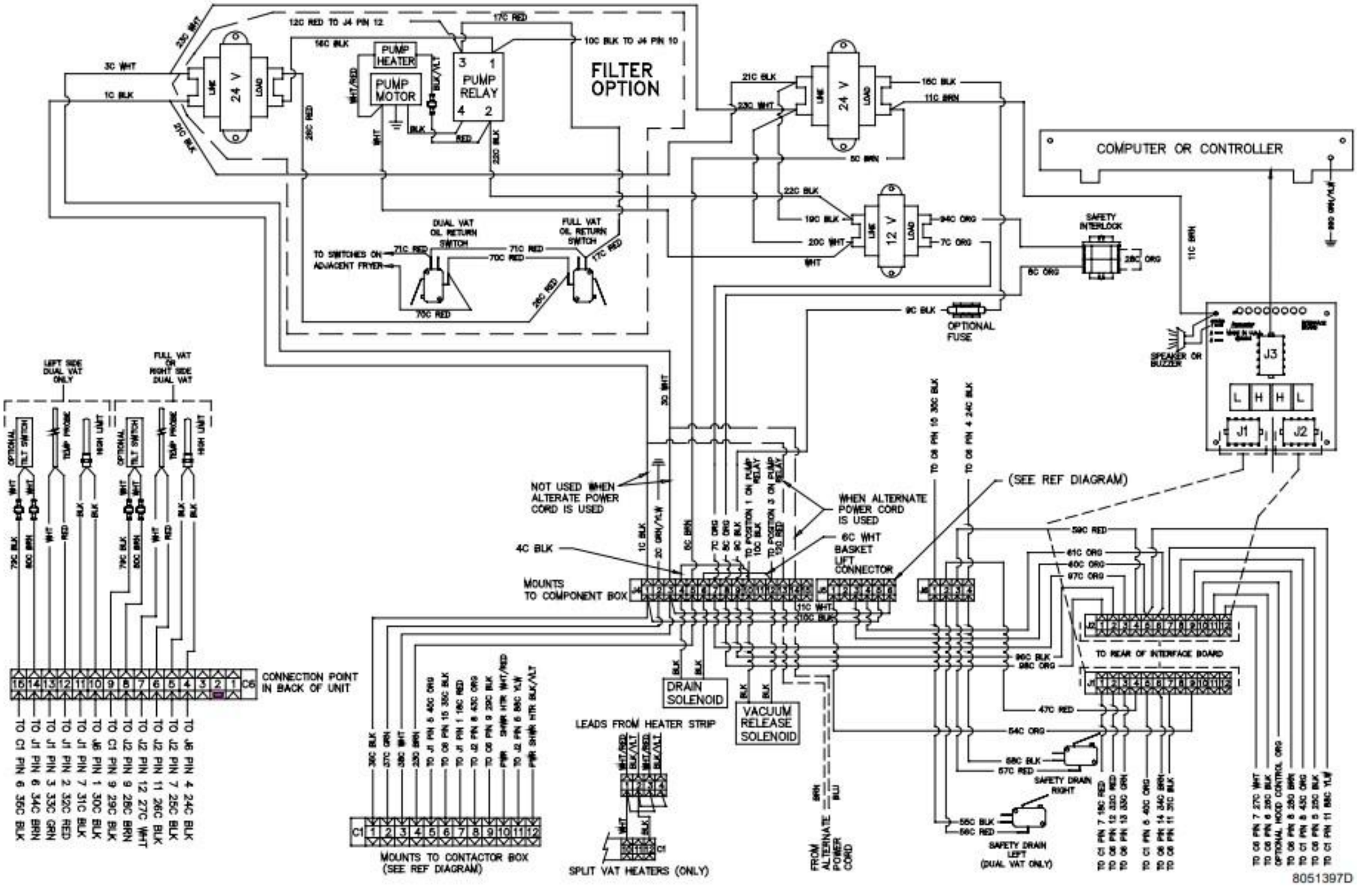
FILTER OPTION
PUMP HEATER
PUMP MOTOR
PUMP RELAY
24 V
12 V
LINE
LOAD
COMPUTER OR CONTROLLER
SAFETY INTERLOCK
OPTIONAL FUSE
SPEAKER OR BUZZER
J1
J2
J3
DUAL VAT OIL RETURN SWITCH
FULL VAT OIL RETURN SWITCH
TO SWITCHES ON ADJACENT FRYER
LEFT SIDE DUAL VAT ONLY
FULL VAT OR RIGHT SIDE DUAL VAT
OPTIONAL TILT SWITCH
TEMP PROBE
HIGH LIMIT
CONNECTION POINT IN BACK OF UNIT
NOT USED WHEN ALTERATE POWER CORD IS USED
WHEN ALTERNATE POWER CORD IS USED
(SEE REF DIAGRAM)
4C BLK
6C WHT BASKET LIFT CONNECTOR
MOUNTS TO COMPONENT BOX
TO REAR OF INTERFACE BOARD
DRAIN SOLENOID
VACUUM RELEASE SOLENOID
LEADS FROM HEATER STRIP
SPLIT VAT HEATERS (ONLY)
MOUNTS TO CONTACTOR BOX (SEE REF DIAGRAM)
FROM ALTERNATE POWER CORD
SAFETY DRAIN RIGHT
SAFETY DRAIN LEFT (DUAL VAT ONLY)
OPTIONAL HOOD CONTROL ORG
8051397D

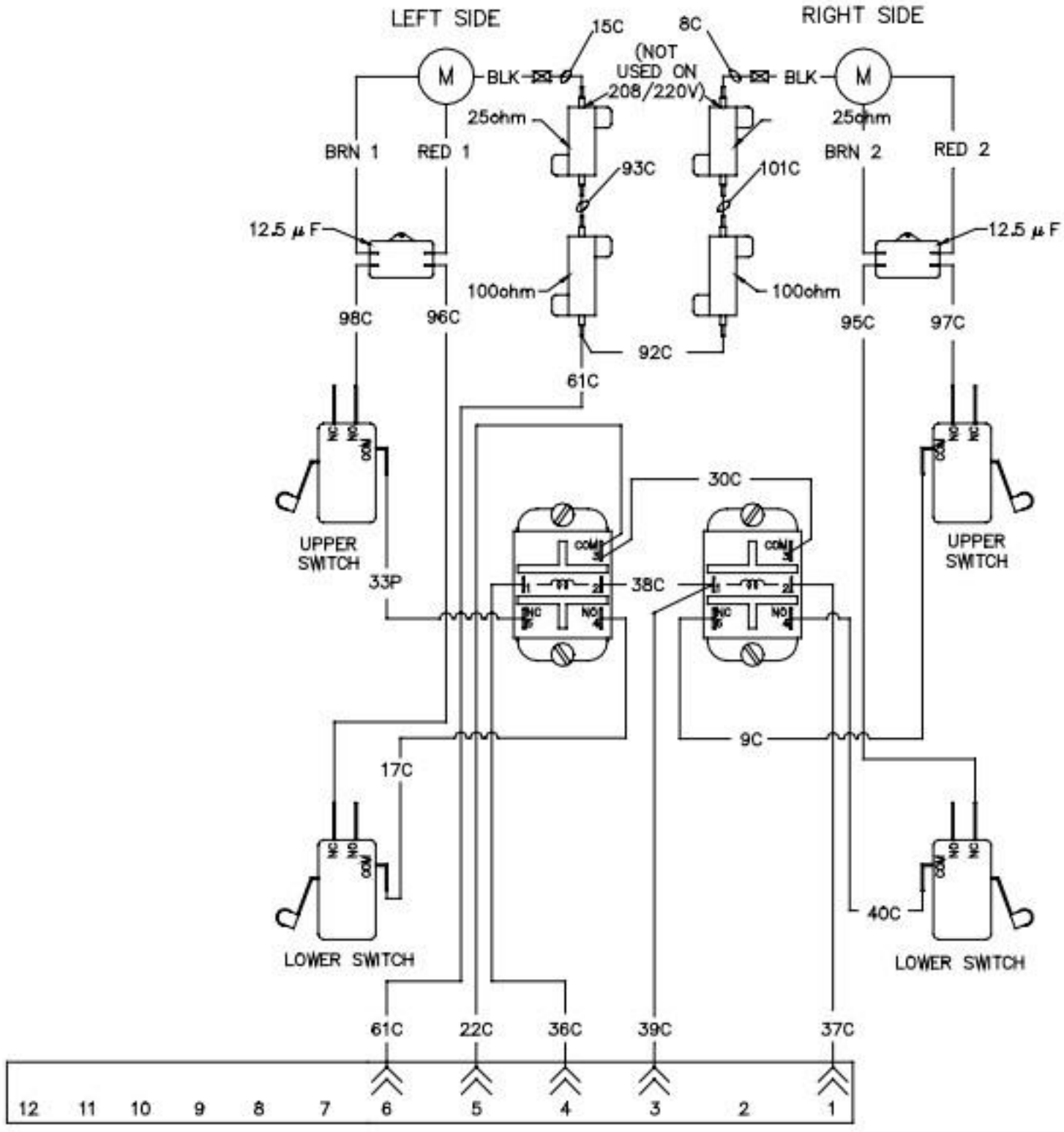
LEFT SIDE
RIGHT SIDE
15C
8C
(NOT USED ON 208/220V)
M
BLK
25ohm
BRN 1
RED 1
BRN 2
RED 2
93C
101C
12.5 μF
100ohm
98C
96C
95C
97C
92C
61C
30C
UPPER SWITCH
33P
38C
9C
17C
40C
LOWER SWITCH
22C
36C
39C
37C
12
11
10
9
8
7
6
5
4
3
2
1