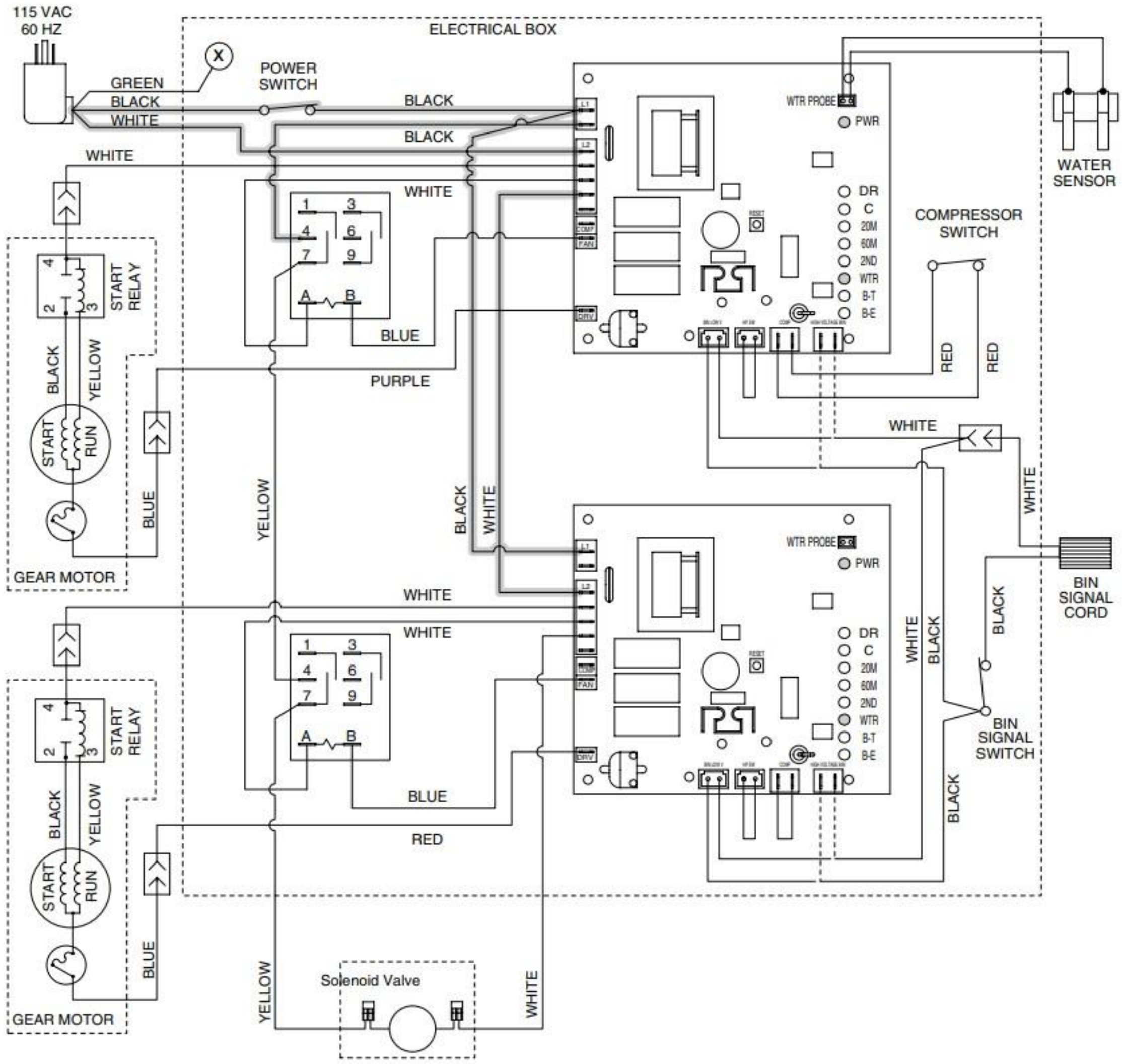
115 VAC
60 HZ
ELECTRICAL BOX
GREEN
BLACK
WHITE
POWER SWITCH
BLACK
BLACK
WHITE
WHITE
WTR PROBE
PWR
WATER SENSOR
DR
C
20M
60M
2ND
WTR
B-T
B-E
COMPRESSOR SWITCH
START RELAY
BLUE
PURPLE
RED
RED
BLACK
YELLOW
START
RUN
WHITE
BLUE
YELLOW
BLACK
WHITE
WHITE
BIN SIGNAL CORD
GEAR MOTOR
WHITE
WHITE
BLACK
BLACK
BIN SIGNAL SWITCH
START RELAY
BLUE
RED
BLACK
YELLOW
START
RUN
BLUE
YELLOW
Solenoid Valve
WHITE
GEAR MOTOR

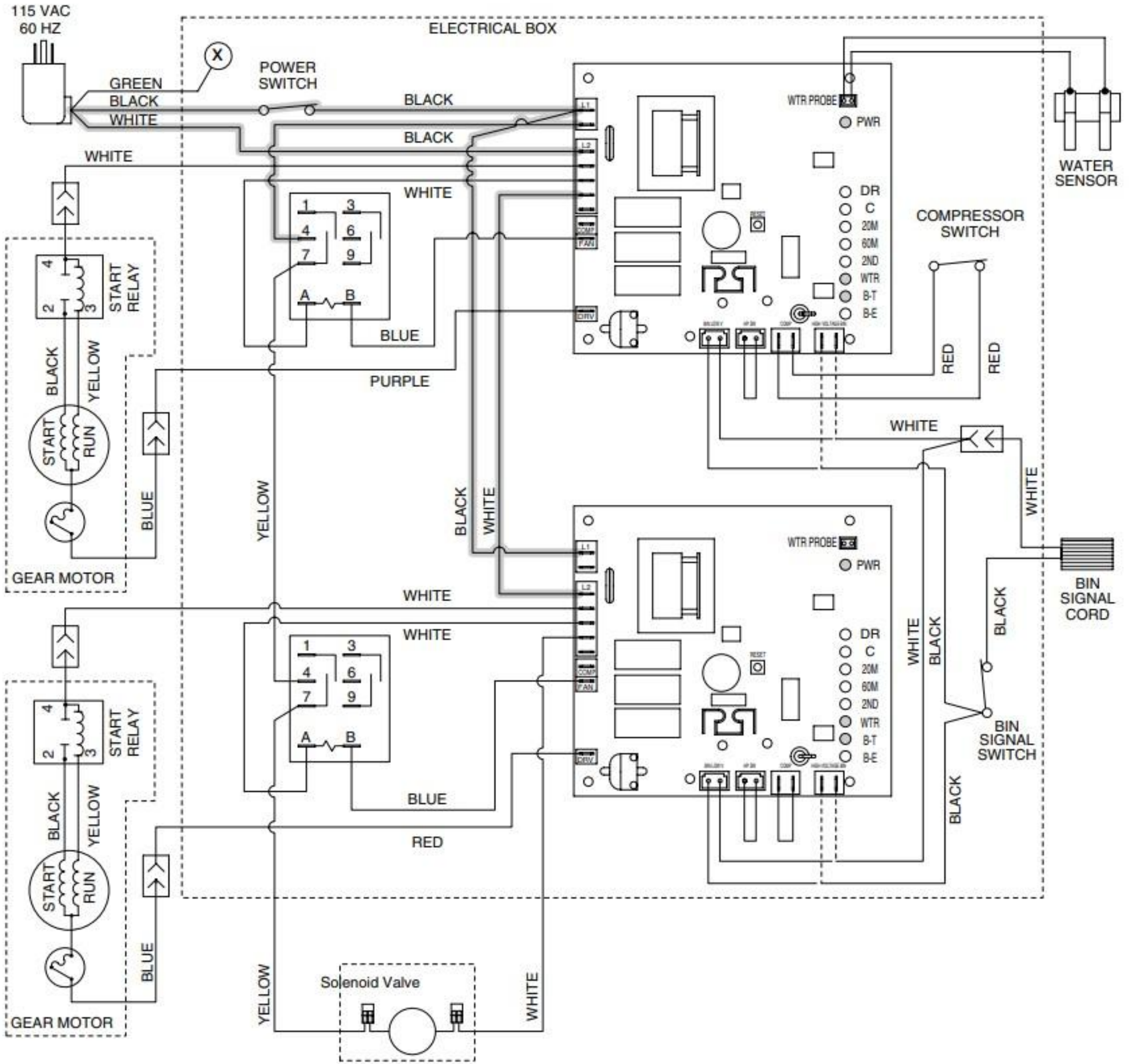
115 VAC
60 HZ
ELECTRICAL BOX
POWER SWITCH
GREEN
BLACK
WHITE
BLACK
BLACK
WHITE
WHITE
WHITE
WTR PROBE
PWR
WATER SENSOR
DR
C
20M
60M
2ND
WTR
B-T
B-E
COMPRESSOR SWITCH
START RELAY
BLACK
YELLOW
START
RUN
BLUE
GEAR MOTOR
BLUE
PURPLE
RED
RED
WHITE
YELLOW
BLACK
WHITE
WHITE
BIN SIGNAL CORD
BLACK
WHITE
BLACK
BIN SIGNAL SWITCH
BLACK
WHITE
WHITE
BLUE
RED
START RELAY
BLACK
YELLOW
START
RUN
BLUE
GEAR MOTOR
YELLOW
Solenoid Valve
WHITE

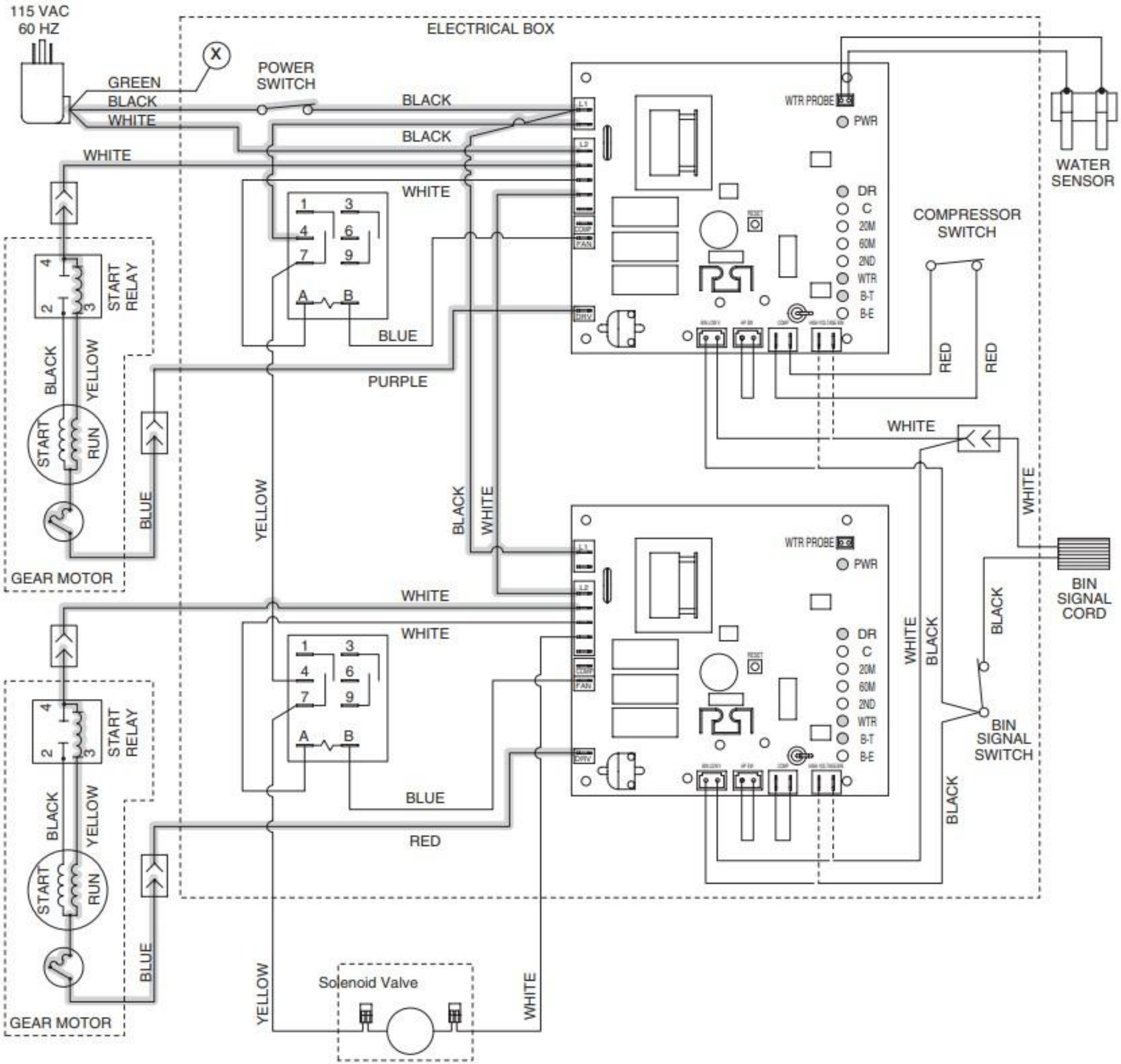
115 VAC
60 HZ
ELECTRICAL BOX
GREEN
BLACK
WHITE
POWER SWITCH
BLACK
BLACK
WHITE
WHITE
WTR PROBE
PWR
WATER SENSOR
DR
C
20M
60M
2ND
WTR
B-T
B-E
COMPRESSOR SWITCH
START RELAY
BLUE
PURPLE
BLACK
YELLOW
START
RUN
BLUE
GEAR MOTOR
RED
RED
WHITE
WHITE
YELLOW
BLACK
WHITE
BIN SIGNAL CORD
WHITE
WHITE
WHITE
BLACK
BLACK
BIN SIGNAL SWITCH
START RELAY
BLUE
RED
BLACK
YELLOW
START
RUN
BLUE
GEAR MOTOR
YELLOW
Solenoid Valve
WHITE

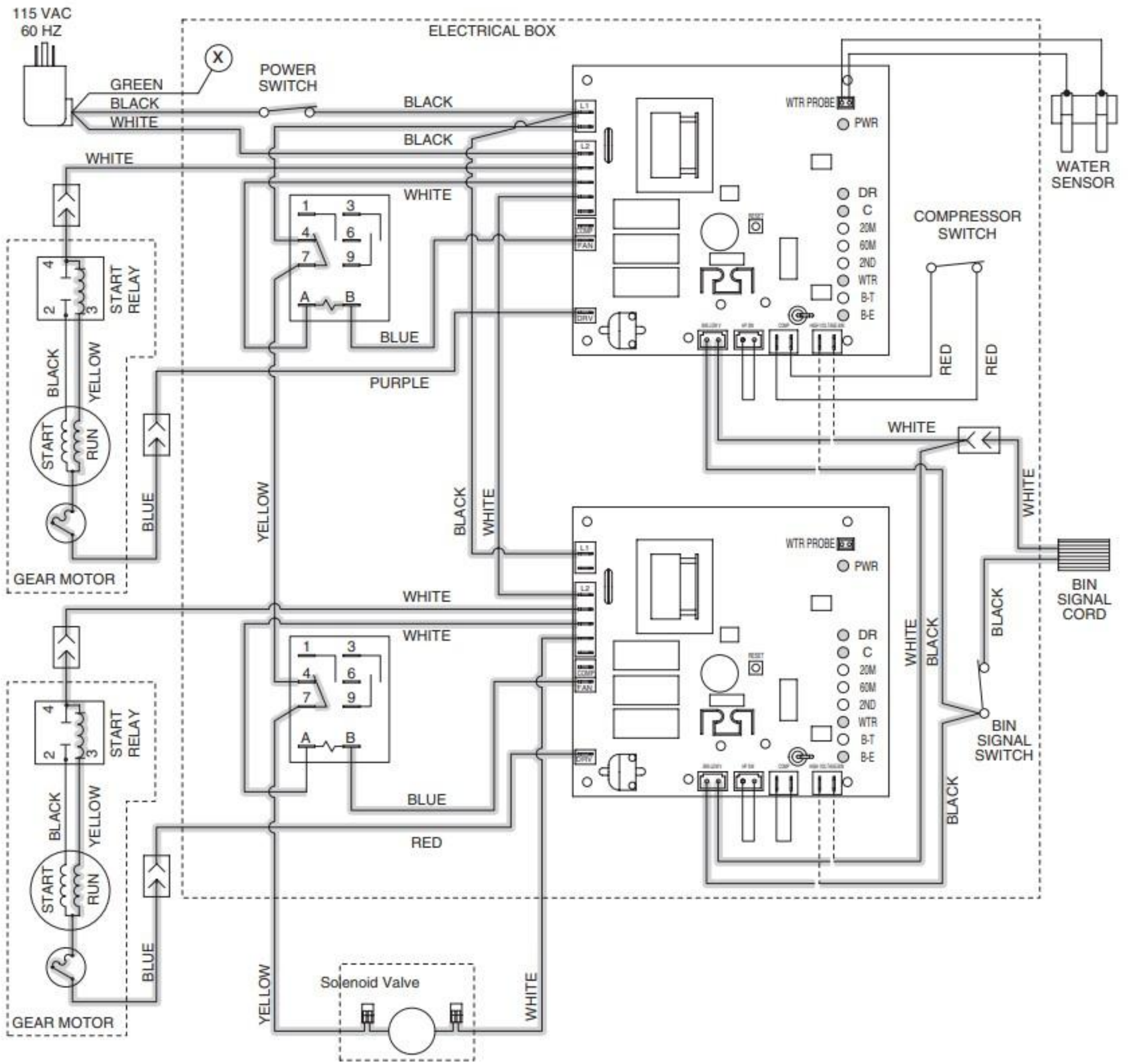
115 VAC
60 HZ
ELECTRICAL BOX
GREEN
BLACK
WHITE
POWER SWITCH
BLACK
BLACK
WHITE
WHITE
WTR PROBE
PWR
WATER SENSOR
DR
C
20M
60M
2ND
WTR
B-T
B-E
COMPRESSOR SWITCH
START RELAY
BLACK
YELLOW
START
RUN
BLUE
GEAR MOTOR
BLUE
PURPLE
RED
RED
WHITE
YELLOW
BLACK
WHITE
WHITE
BIN SIGNAL CORD
WHITE
BLACK
BLACK
BIN SIGNAL SWITCH
BLACK
WHITE
WHITE
BLUE
RED
Solenoid Valve
YELLOW
WHITE

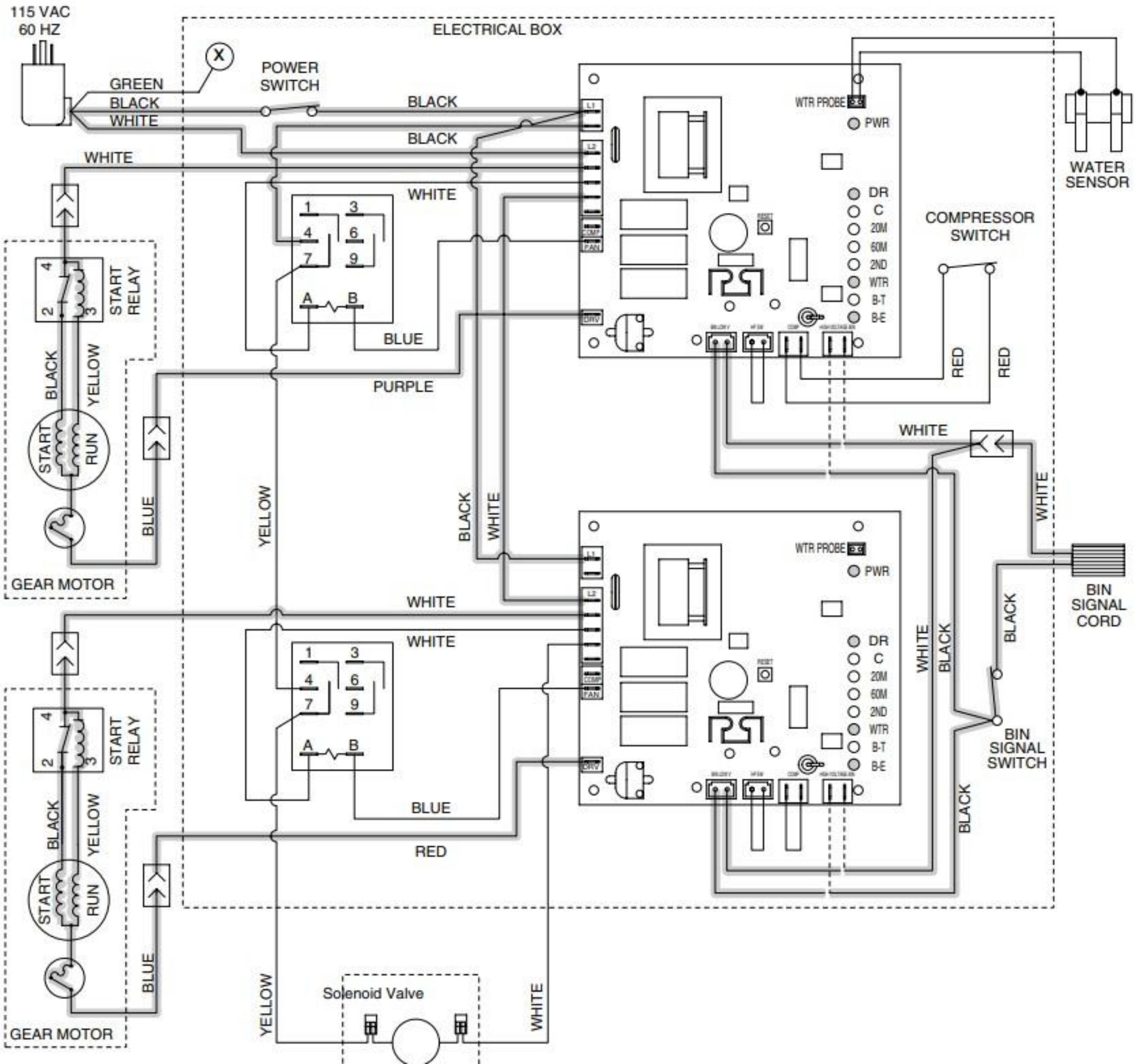
115 VAC
60 HZ
ELECTRICAL BOX
X
POWER
SWITCH
GREEN
BLACK
WHITE
BLACK
BLACK
WHITE
WHITE
WTR PROBE
PWR
WATER
SENSOR
DR
C
20M
60M
2ND
WTR
B-T
B-E
COMPRESSOR
SWITCH
START
RELAY
BLACK
YELLOW
START
RUN
BLUE
GEAR MOTOR
BLUE
PURPLE
RED
RED
WHITE
WHITE
YELLOW
BLACK
WHITE
BIN
SIGNAL
CORD
WHITE
BLACK
BLACK
BIN
SIGNAL
SWITCH
BLACK
WHITE
WHITE
START
RELAY
BLACK
YELLOW
START
RUN
BLUE
GEAR MOTOR
BLUE
RED
YELLOW
Solenoid Valve
WHITE

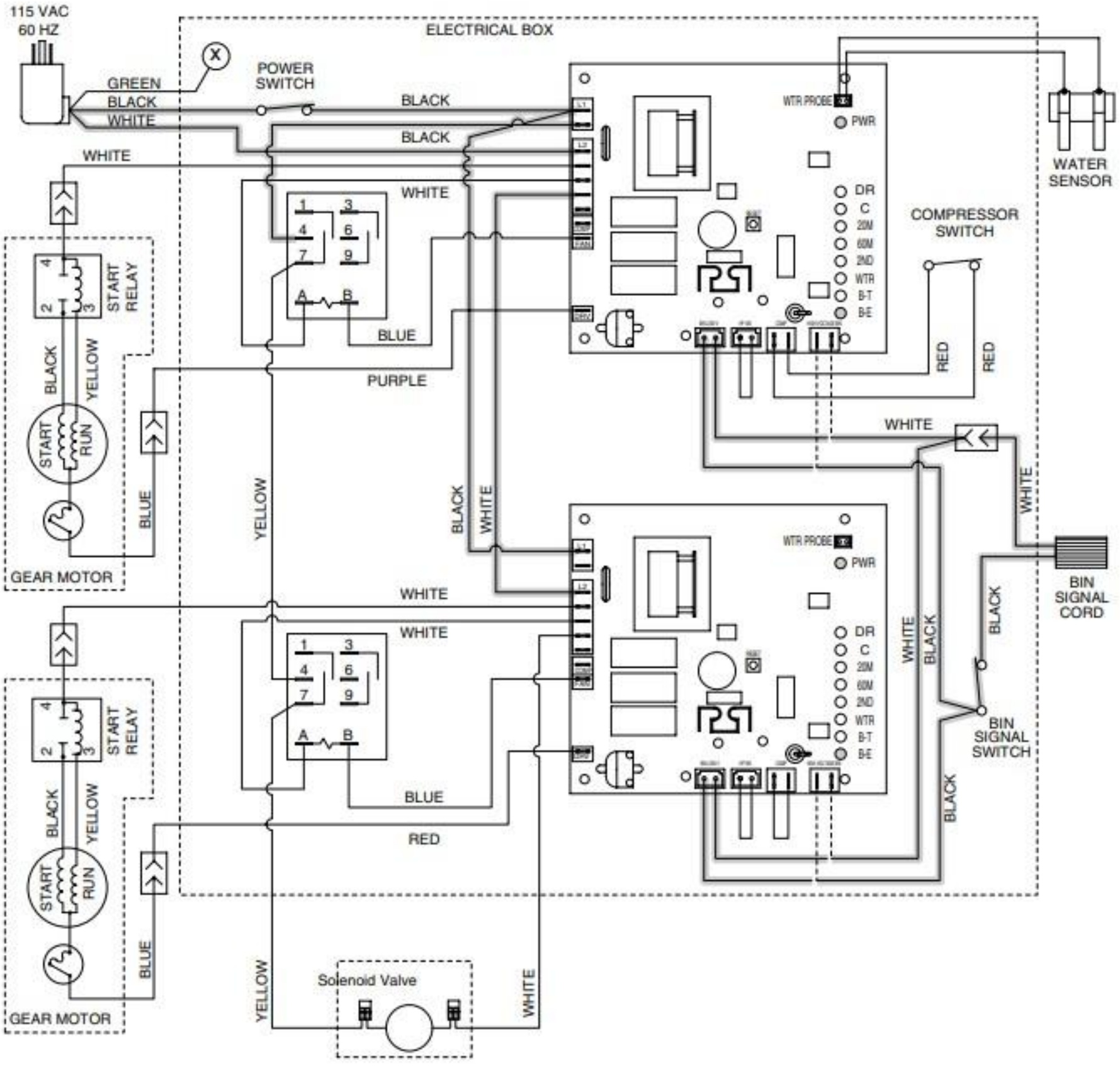
115 VAC
60 HZ
ELECTRICAL BOX
GREEN
BLACK
WHITE
POWER SWITCH
BLACK
BLACK
WHITE
WHITE
WTR PROBE
PWR
DR
C
25M
60M
2ND
WTR
B-T
B-E
WATER SENSOR
COMPRESSOR SWITCH
RED
RED
START RELAY
BLACK
YELLOW
START
RUN
BLUE
GEAR MOTOR
BLUE
PURPLE
YELLOW
BLACK
WHITE
WHITE
BIN SIGNAL CORD
BIN SIGNAL SWITCH
BLACK
WHITE
BLACK
BLACK
WHITE
WHITE
BLUE
RED
Solenoid Valve
YELLOW
WHITE

115 VAC
60 HZ

ELECTRICAL BOX

GREEN
BLACK
WHITE

POWER SWITCH

BLACK
BLACK
WHITE

WATER SENSOR

COMPRESSOR SWITCH

START RELAY

BLACK
YELLOW
START
RUN

GEAR MOTOR

BLUE

PURPLE

RED
RED

WHITE

YELLOW

BLACK
WHITE

BIN SIGNAL CORD

BIN SIGNAL SWITCH

RED

Solenoid Valve
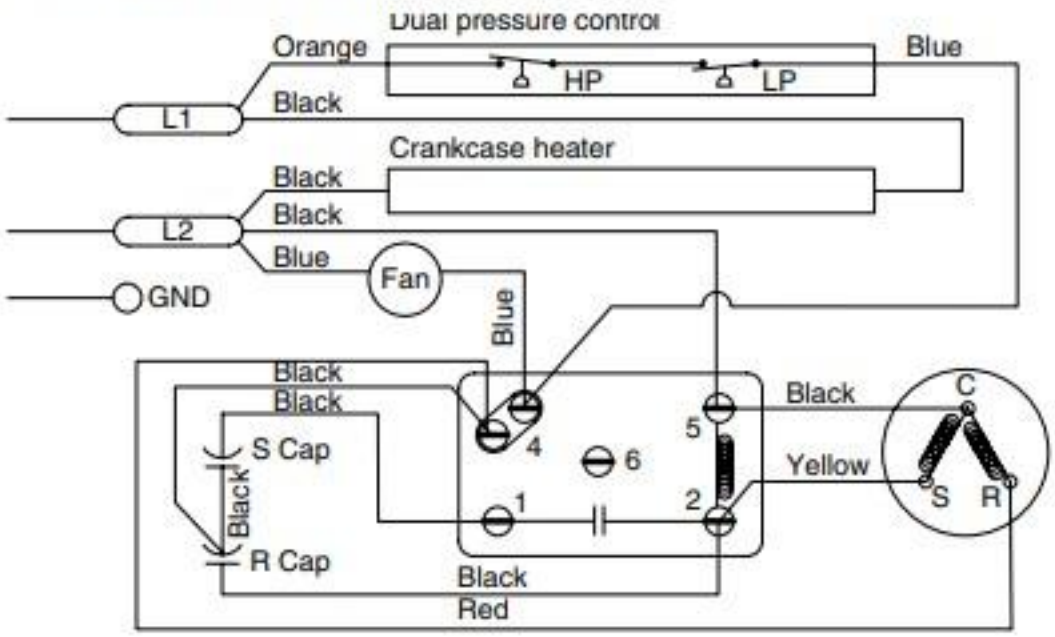
## Condensing unit wiring diagram