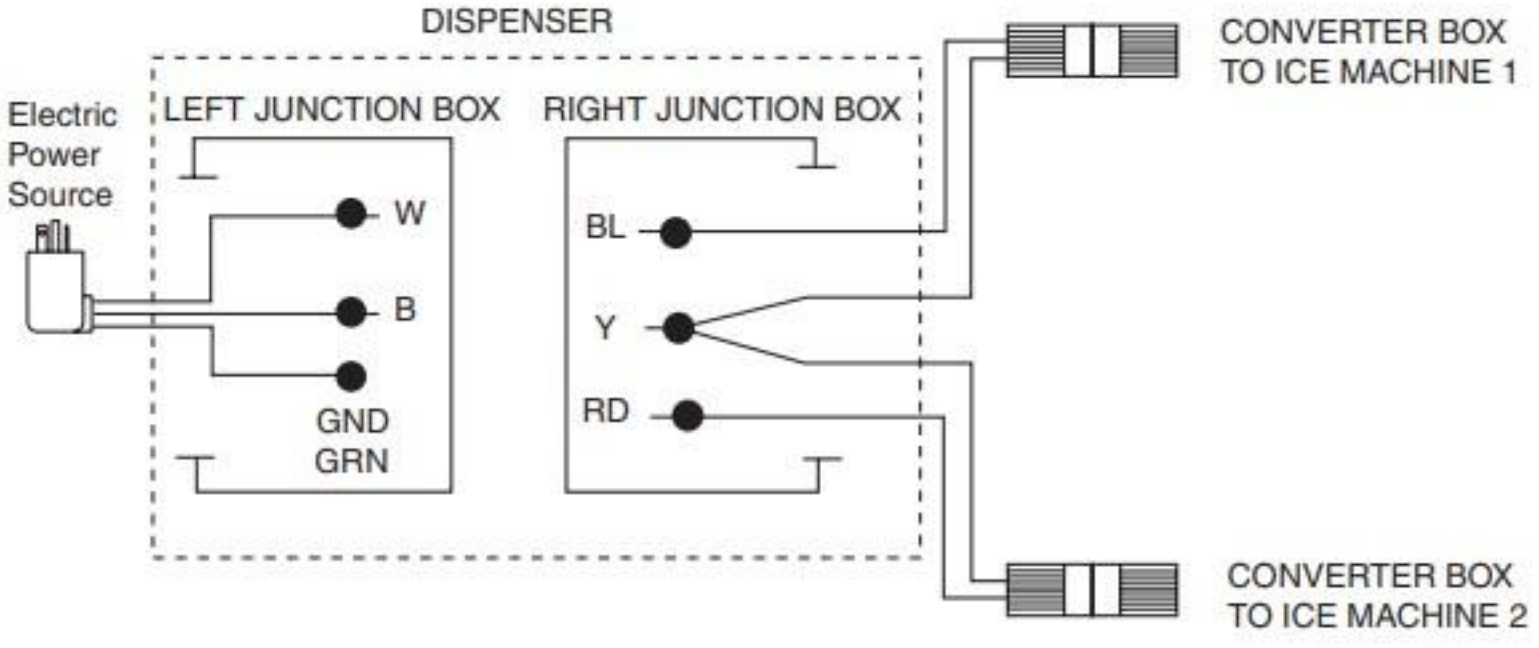
DISPENSER
Electric
Power
Source
LEFT JUNCTION BOX
RIGHT JUNCTION BOX
W
B
GND
GRN
BL
Y
RD
CONVERTER BOX
TO ICE MACHINE 1
CONVERTER BOX
TO ICE MACHINE 2

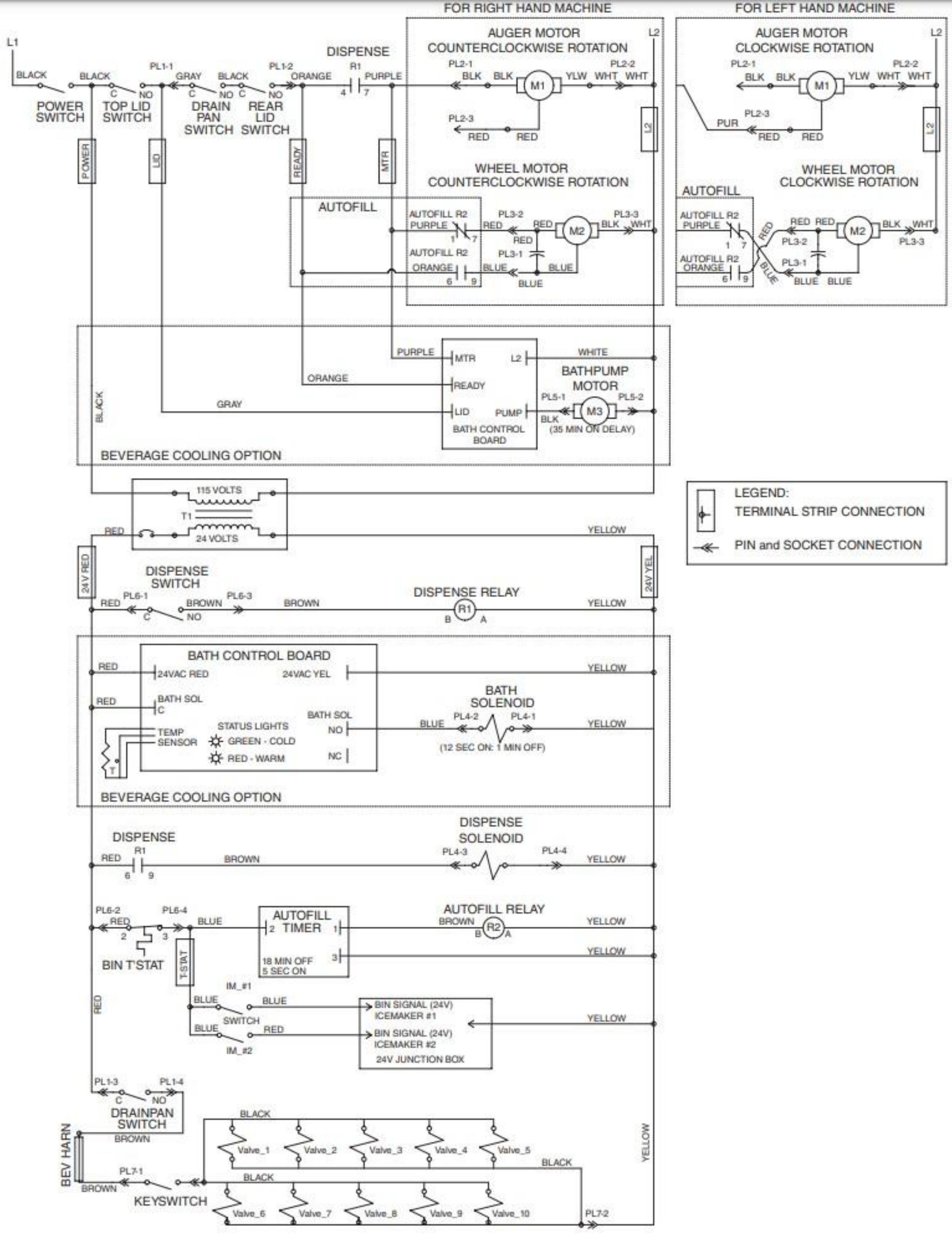
FOR RIGHT HAND MACHINE
FOR LEFT HAND MACHINE
L1
L2
BLACK
POWER SWITCH
TOP LID SWITCH
DRAIN PAN SWITCH
REAR LID SWITCH
PL1-1
PL1-2
GRAY
ORANGE
DISPENSE
R1
PURPLE
POWER
LID
READY
MTR
AUGER MOTOR COUNTERCLOCKWISE ROTATION
PL2-1
PL2-2
PL2-3
BLK
YLW
WHT
RED
M1
WHEEL MOTOR COUNTERCLOCKWISE ROTATION
AUTOFILL
AUTOFILL R2
PL3-1
PL3-2
PL3-3
BLUE
M2
AUGER MOTOR CLOCKWISE ROTATION
PUR
WHEEL MOTOR CLOCKWISE ROTATION
BEVERAGE COOLING OPTION
MTR
READY
LID
PUMP
BATH CONTROL BOARD
WHITE
BATHPUMP MOTOR
PL5-1
PL5-2
M3
(35 MIN ON DELAY)
115 VOLTS
T1
24 VOLTS
24V RED
24V YEL
DISPENSE SWITCH
PL6-1
PL6-3
BROWN
DISPENSE RELAY
R1
LEGEND:
TERMINAL STRIP CONNECTION
PIN and SOCKET CONNECTION
BATH CONTROL BOARD
24VAC RED
24VAC YEL
BATH SOL
STATUS LIGHTS
GREEN - COLD
RED - WARM
TEMP SENSOR
BATH SOLENOID
PL4-2
PL4-1
(12 SEC ON: 1 MIN OFF)
BEVERAGE COOLING OPTION
DISPENSE
DISPENSE SOLENOID
PL4-3
PL4-4
PL6-2
PL6-4
BIN T'STAT
T-STAT
AUTOFILL TIMER
18 MIN OFF
5 SEC ON
AUTOFILL RELAY
R2
IM_#1
IM_#2
SWITCH
BIN SIGNAL (24V) ICEMAKER #1
BIN SIGNAL (24V) ICEMAKER #2
24V JUNCTION BOX
PL1-3
PL1-4
DRAINPAN SWITCH
BEV HARN
PL7-1
KEYSWITCH
Valve_1
Valve_2
Valve_3
Valve_4
Valve_5
Valve_6
Valve_7
Valve_8
Valve_9
Valve_10
PL7-2