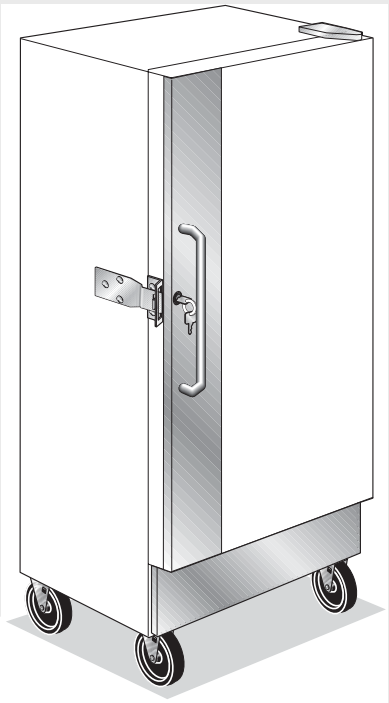

ARCTIC AIR

Factory Parts Catalog

Product No.	F22CW13
Series	134A
Color	white
Volts	115
Owner's Guide	216899800
Market	private label

Electrolux

ELECTROLUX HOME PRODUCTS, INC.
P.O. Box 212378, Augusta, GA 30917

Publication No.
5995422283
04/11/17
(EN/SERVICE/MLR)
365

UPRIGHT FREEZER

Model No.
F22CW

Copyright © 2004 Electrolux Home Products, Inc.
All rights reserved.

DOOR

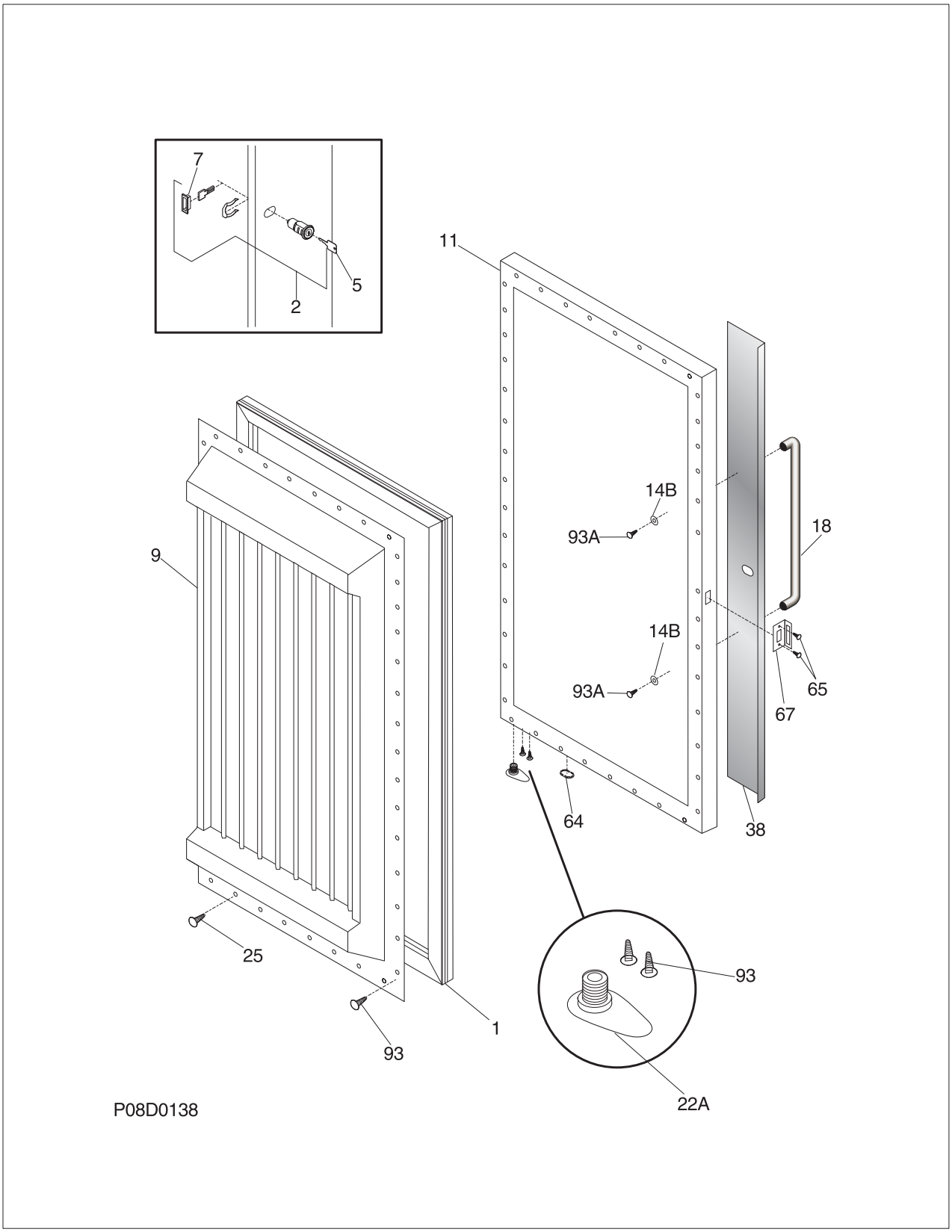

DOOR

POS. NO	PART NO.	DESCRIPTION
1	216522315	Gasket-door, gray
2 #	216362700	Lock Assy
5 #	216362800	Key, lock
7	216468700	Bezel-lock
9	216529700	Panel-inner door
11	216450100	Panel-outer door, white
14B	5303311368	Washer, flat
18	216714100	Handle-door
22A	216335400	Bearing-hinge
25	216022800	Screw, washer head, 8-18 X 1/2
32	5309950074	Valve, breather, door base
38	216322800	Trim-door
64	216403700	Plug-button, hole filler, door base
65	216423500	Screw-retainer
67	216423000	Retainer-lock
93	5303161215	Screw, ph truss head, 8-18AB x 0.500
93A	5303302760	Screw, round head sems, 10-32 x 0.375

CABINET

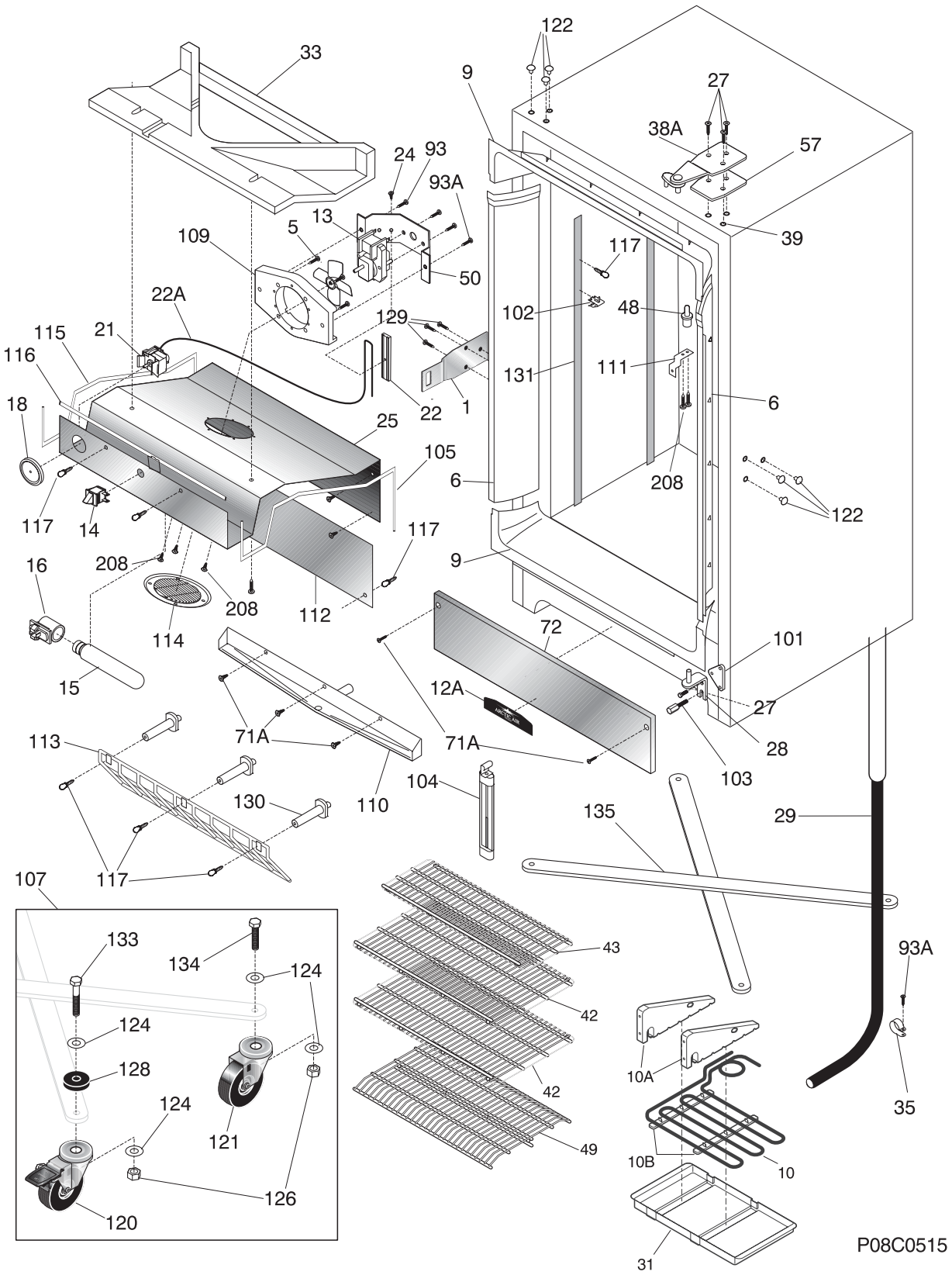
122
33
9
27
38A
57
24
93
93A
13
5
109
50
39
117
22A
102
48
129
115
21
116
131
111
18
22
1
6
25
105
6
208
122
117
14
117
9
16
208
208
112
114
72
101
15
12A
27
113
71A
71A
28
103
104
130
110
135
29
107
117
133
134
124
124
128
124
121
126
120
43
42
42
49
93A
10A
35
10B
10
31
P08C0515

CABINET

POS. NO	PART NO.	DESCRIPTION
1	216324200	Lock-catch
5 #	216325600	Fan Blade
6	216604100	Breaker Kit w/corners
9	216603300	Breaker Kit w/corners, 32", top or bottom
10 #	216985300	Heater, tubing formed
10A	216710400	Bracket, (2), top drain pan
10B	216710500	Bracket, (2), btm. drain pan
12A	216734500	Nameplate
13	216934100	Motor, fan, 115 V
*	216912400	Screw, hex washer head, #8-32 x .500, bracket fan mtr, (2)
14	216822900	Switch, light/lamp, ramp
15	216518100	Light Bulb/Lamp
16	216817601	Socket, light/lamp, 25 W
18	216591500	Knob, temp control
21	216579100	Control-temperature, NSF
22	216823500	Clamp, cap tube, cold control
22A	5303916855	Tube, sensor sleeve, plastic, clear
24	5300052943	Screw-clamp, truss hd cr, control
25	216375601	Cover-evaporator
27	216850900	Screw, hex washer hd, 1/4 x 7/8, hinge mtg
28	216335600	Hinge-bottom, stepped pin
29	216361901	Hose-drain
31	216732400	Pan-drain
33	216680900	Duct-air
35	06594637	Clip-drain hose
38A	216365200	Door Closer
39	5303294372	Nut-insert, 1/4-20 UNC, hinge
42	216384000	Shelf-full frame, wire, (2)
43	216386200	Shelf-partial, wire
48	08000456	Spacer-baffle plate
49	216331800	Trivet
50	08013207	Bracket-fan motor
57	216335500	Spacer-hinge, top
71A	216395800	Screw-grille/kickplate
72	216330500	Grille/Kickplate
93	5303161215	Screw, ph truss head, 8-18AB x 0.500
93A	5303302760	Screw, round head sems, 10-32 x 0.375
101	216335700	Plate-hinge, tapping
102	216605300	Support shelf, adjustable
103	216336300	Standoff-base panel
104	216360600	Thermometer
105	216361100	Gasket-cover evap, RH
107	216496100	Roller Set
109	216375700	Blower-fan
110	216377000	Pan-drain, condensate
111	216637800	Bracket-evap cover
112	216381300	Cover-drain, condensate
113	216383600	Grate-air intake
114	216382600	Cover-blower
115	216383700	Gasket-evap cover, LH
116	216383800	Gasket-evap cover, front

Functional Parts
* Non-Illustrated Parts

CABINET

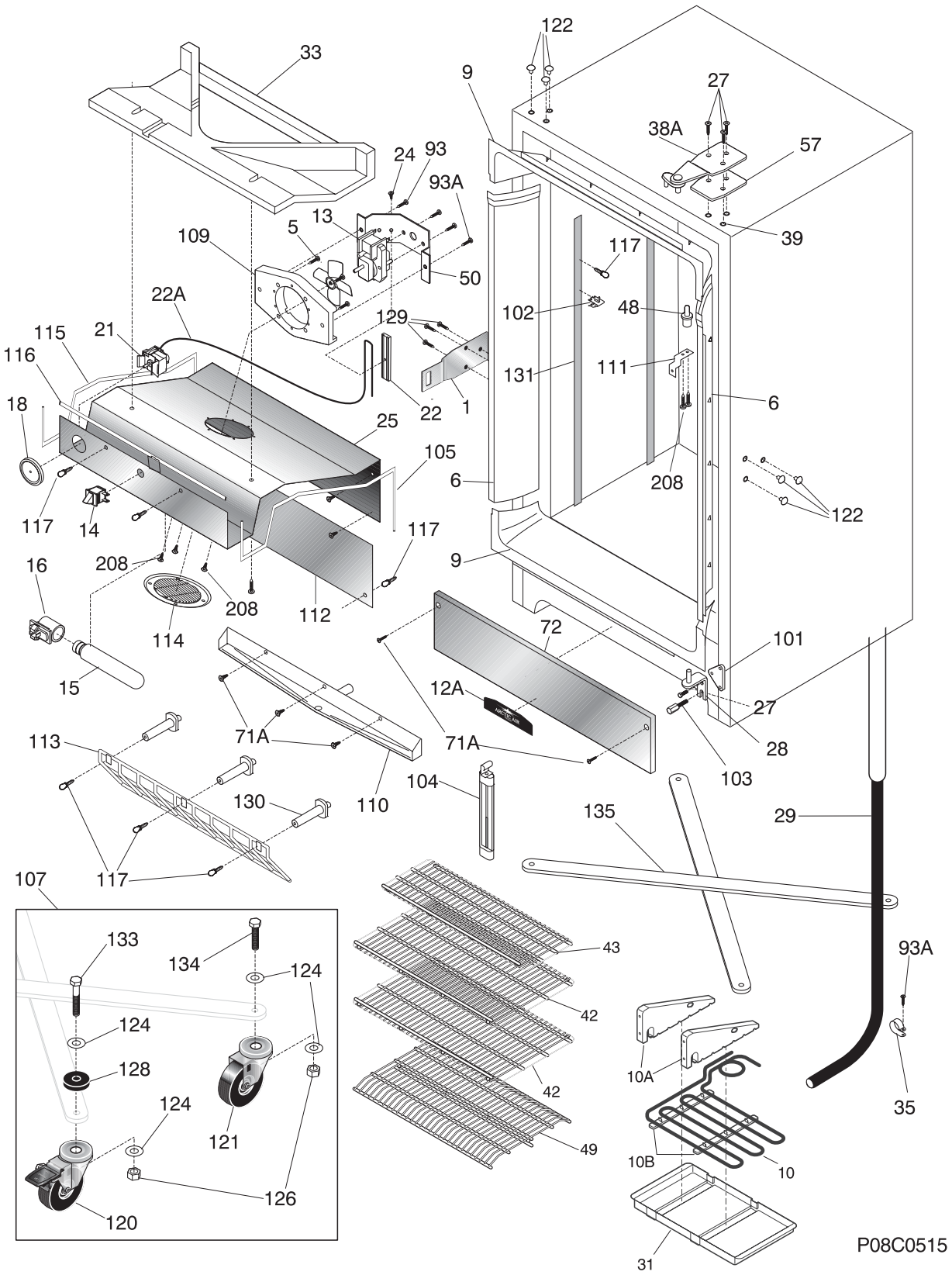
122
33
9
27
38A
57
24
93
93A
13
5
109
50
39
117
22A
102
48
129
115
21
116
131
111
18
22
1
6
25
105
6
208
122
117
14
117
9
16
208
208
112
114
72
101
15
12A
27
113
71A
71A
28
103
104
130
110
135
29
107
117
133
134
124
124
128
124
121
126
120
43
42
42
49
93A
10A
35
10B
10
31
P08C0515

CABINET

POS. NO	PART NO.	DESCRIPTION
117	216605500	Thumbscrew
120	216495300	Roller-front
121	216495200	Roller-rear, (2)
122	215134501	Plug-button, white
124	216495400	Washer, flat, 3/8, rear, (2)
126	216495700	Nut, locking, 3/8, rear, (2)
128	216393600	Spacer-caster, front
129	216393300	Screw-lock catch, one way
130	06599544	Support-evaporator
131	216605200	Shelf-standard
133	216495500	Bolt roller mtg, front
134	216495600	Bolt, caster, 3/8 x 1.5, rear, (2)
135	216496000	Support-casters
208	216504500	Screw, AB, 8-18x.500, (4)
*	09948773	Insulation, drain tube
*	216609500	Wire ground, NSF
*	5303305324	Paint, touch-up, white
*	5303311565	Clip-cable

SYSTEM

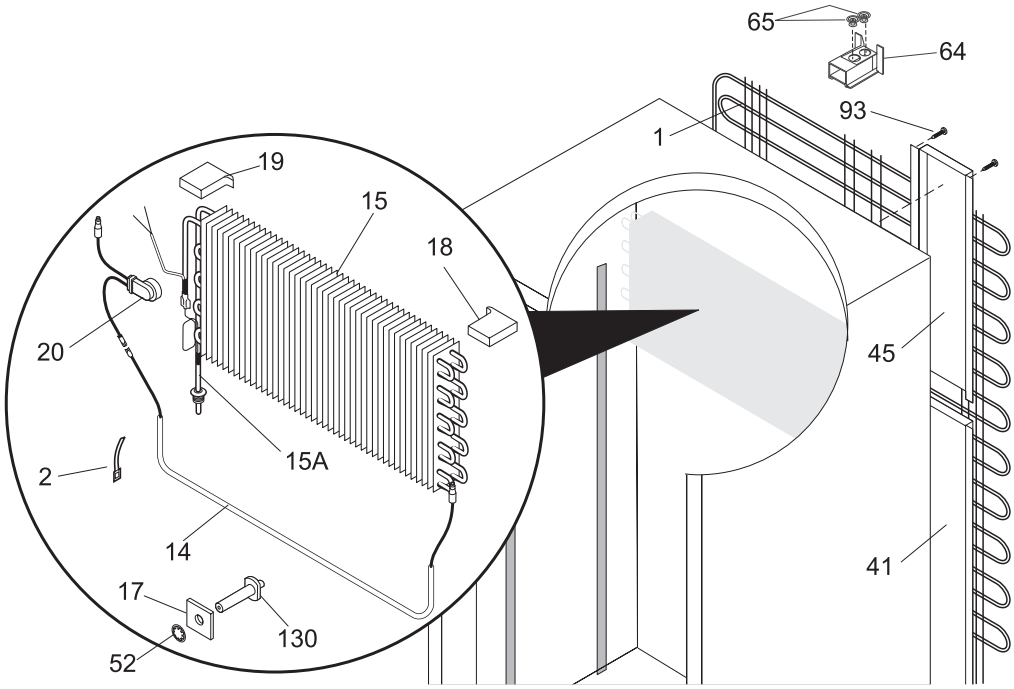

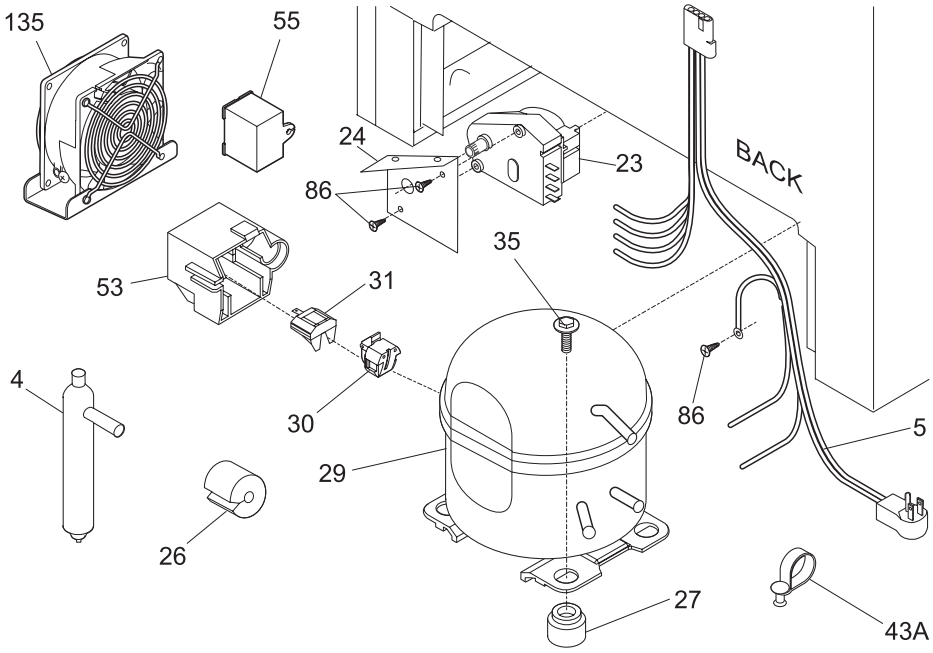

P08S0341

SYSTEM

POS. NO	PART NO.	DESCRIPTION
1 #	5300083897	Condenser
2	5308000110	Strap-evap/heater, aluminum, (2)
4 #	216938600	Drier-filter
5 #	216897100	Harness, electrical, fan
* #	216825600	Harness, electrical, evaporator
14	216608500	Heater-defrost
15 #	216751300	Evaporator
15A#	216393200	Heat Exchanger
17	06599546	Spacer-support, evaporator, (2)
18	216727600	Insulator-evap, styrofoam
19	216727700	Insulator-evap, styrofoam
20	5304404743	Thermostat-defrost
23 #	216744500	Timer-defrost
24	08016580	Bracket
26	5303298960	Spacer-tube, 0.237" ID
27	218513300	Grommet-compr mtg, (4)
29#	216966900	Compressor, assy
30 #	216100126	Overload Protector
31	216894200	Starter, relay
35	240491501	Screw-compressor mtg, 1/4-28 x 1.16, shoulder, typ CF
41	216524000	Cover-wiring, rear
43A	5303212614	Clip, harness mount
45	216389900	Cover-wiring, rear/top
52	08013198	Retainer, spacer evap
53	216894500	Cover-terminal
55 #	216894400	Capacitor-run
64	216578800	Vent
65	5309950074	Valve, breather, door base
86	216036600	Screw, ph washer head, 8-32CA x 0.500, thread forming
93	5303161215	Screw, ph truss head, 8-18AB x 0.500
130	216486800	Support, evaporator mtg
135	216904300	Fan Assy, compressor
*	09950610	Clip, cord
*	5303311565	Clip-cable