[CGP650SET1SS] CONTROL PANEL & COOKTOP

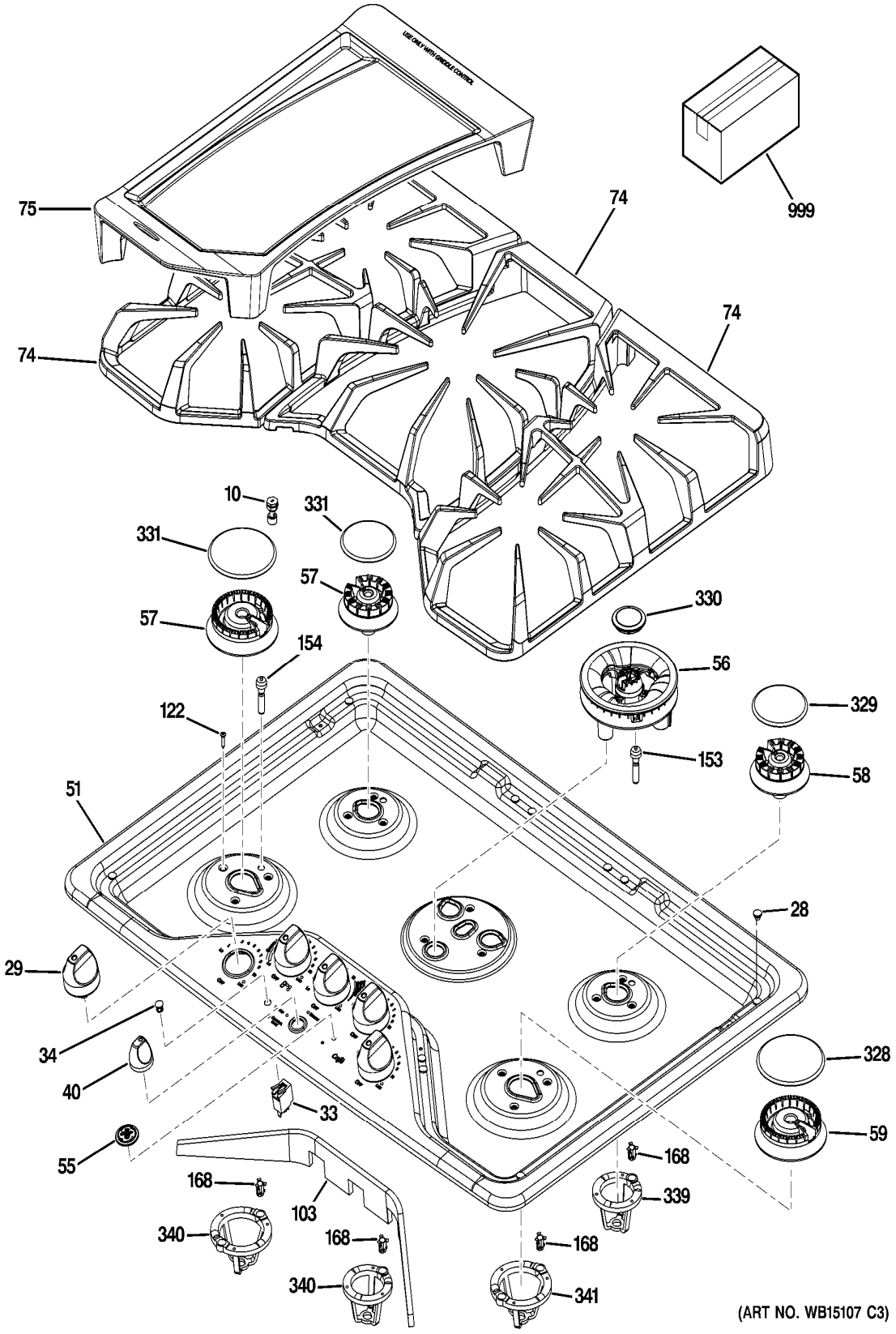
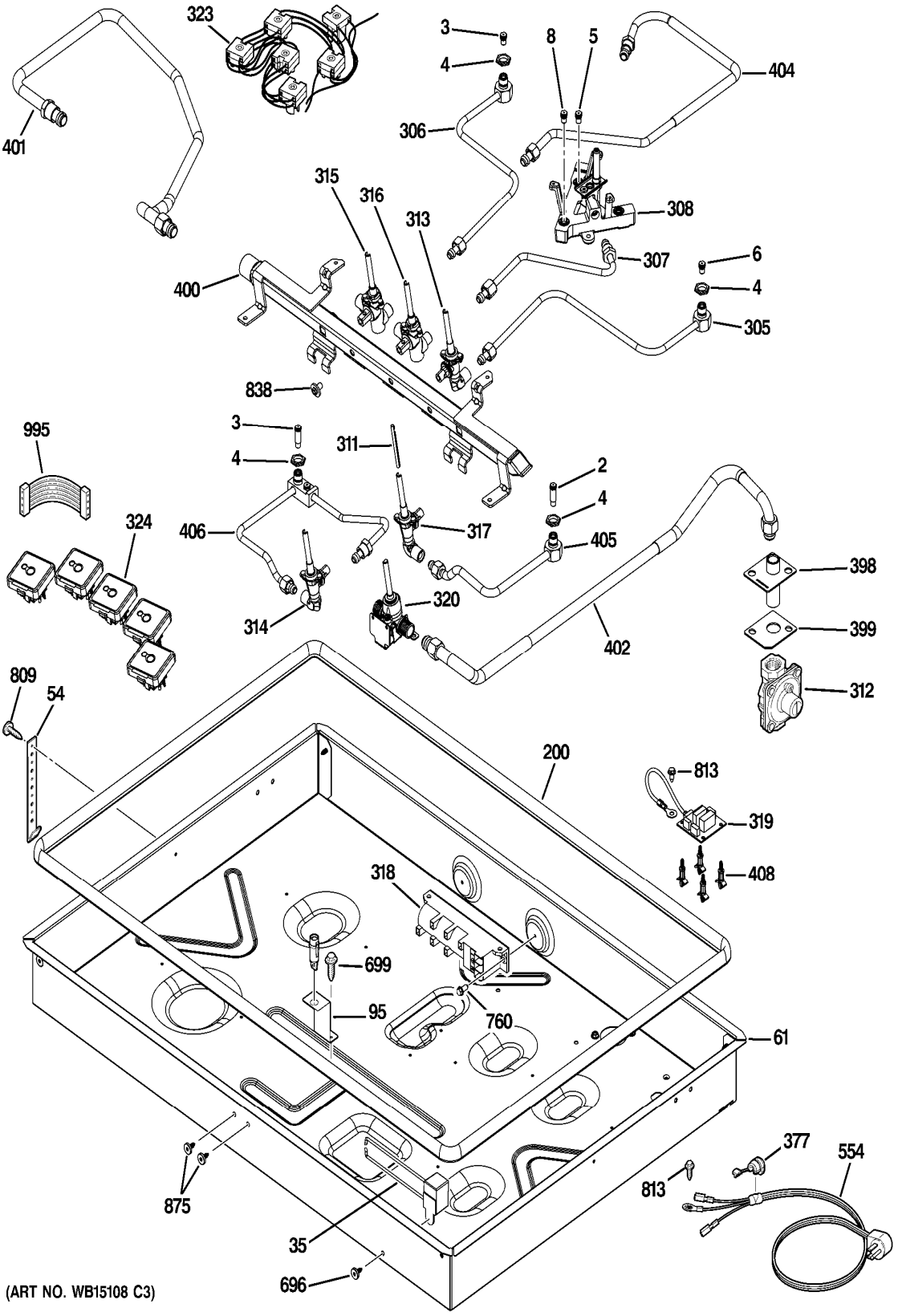
[CGP650SET1SS] GAS & BURNER PARTS