# Parts Catalog



S213A

# S2 Series
# Standard Automatic
## Model: S213A

10/30/2026 Rev. F
IMPORTANT!
TO EXPEDITE SHIPMENT OF PARTS, ALWAYS SPECIFY MODEL, REV, PART NUMBER, AND SERIAL NUMBER OF UNIT.


## GLOBE FOOD EQUIPMENT COMPANY
2215 East River Road
Dayton, Ohio 45439

**Parts Department**
Toll Free 1-800-745-6238
E-Mail: info@globefoodequip.com
Website: www.globefoodequip.com

Not for resale

© Globe Food Equipment Company, 2026
900152 ECN1283

# Table of Contents


| Description | Page |
|---|---|
| S213A Base Components | 4 |
| S213A Index Knob Components | 6 |
| S213A Gauge Plate Components | 8 |
| S213A Knife Cover Components | 10 |
| S213A Knife Drive Components | 12 |
| S213A Knife Drive Motor Components | 14 |
| S213A Ring Guard Assembly Components | 16 |
| S213A Sharpener Assembly Components | 18 |
| S213A Lift Arm Components | 20 |
| S213A Index Plate Assembly Components | 22 |
| S213A Automatic Drive Assembly Components | 24 |
| S213A Transport Assembly Components | 26 |
| S213A Auto Engage Lever Components | 28 |
| S213A Carriage Tray Assembly Components | 30 |
| S213A Electrical Components | 32 |
| S213A Slicer Schematic | 36 |

# S213A Base Components

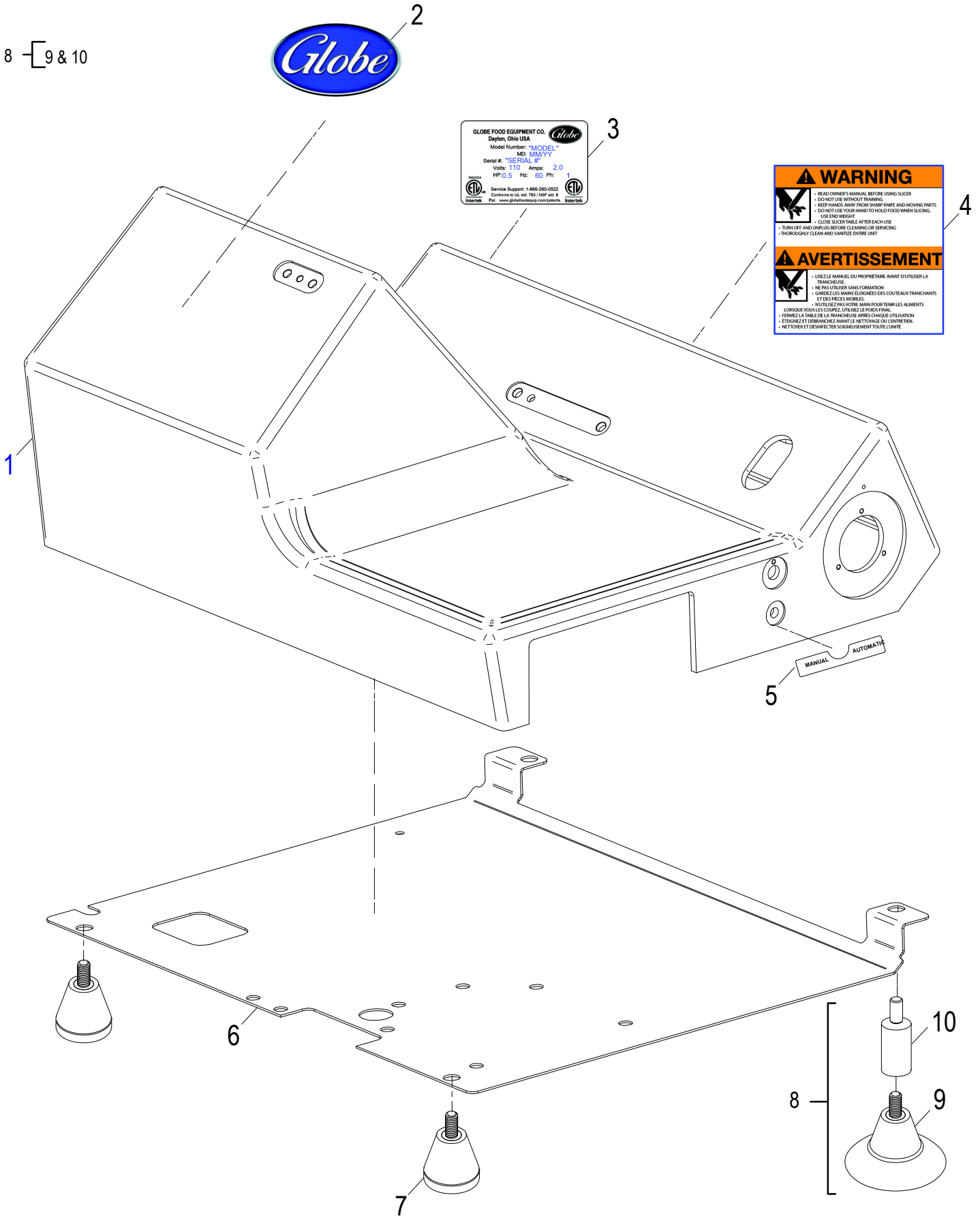




© Globe Food Equipment Company

# S213A Base Components

| Item | Part Number | Description | Qty | Serial Number |
|---|---|---|---|---|
| 1 | 460200-02 | Slicer Base | 1 | |
| 2 | 920202 | Globe Logo Decal S - Series | 2 | |
| 3 | 900098 | Data Plate, S2-Series | 1 | |
| 4 | 900097 | Warning Label, English/French | 1 | |
| 5 | 900061 | Auto Engage Label | 1 | |
| 6 | 300237 | Bottom Cover | 1 | |
| 7 | 510132 | Standard Slicer Foot | 2 | |
| 8 | 500152-02 | Suction Slicer Foot Kit (Incls. Items 9-10) | 2 | |
| 9 | 510133 | Suction Slicer Foot | 1 | |
| 10 | 460291 | Foot Extension | 1 | |



© Globe Food Equipment Company

# S213A Index Knob Assembly

1 — 2-3
4 — 5-6
7 — 8-13

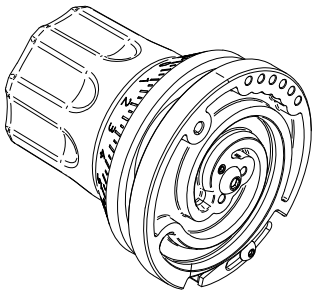

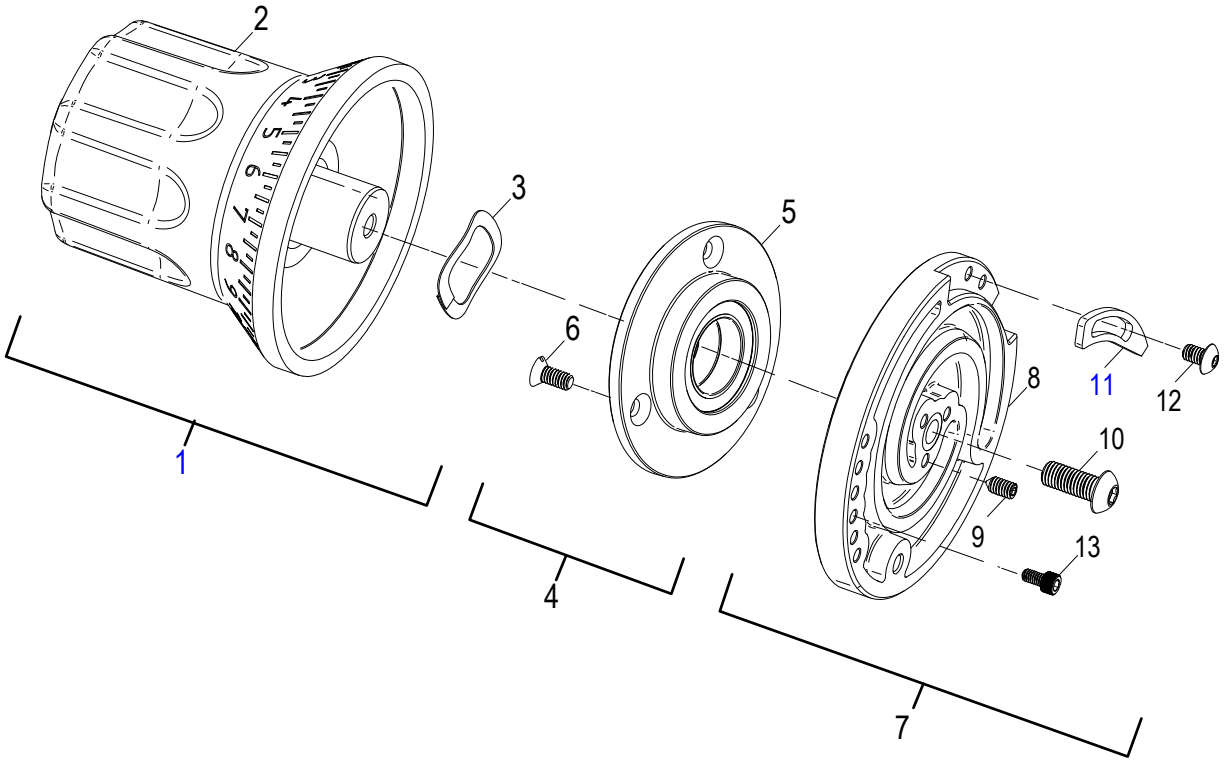




© Globe Food Equipment Company

# S213A Index Knob Assembly

| Item | Part Number | Description | Qty | Serial Number |
|---|---|---|---|---|
| 1 | 500136 | Index Knob Assembly (Incls. items 2-3) | 1 | |
| 2 | 500111 | Index Knob | 1 | |
| 3 | 800376 | Single Wave Washer 20.220 mm x 28 mm | 1 | |
| 4 | 400268 | Index Hub Assembly Kit (Incls. items 5-6) | 1 | |
| 5 | 400211 | Index Hub Assembly | 1 | |
| 6 | 800380 | Slotted Flat Head Screw 8-32 x 0.375 | 3 | |
| 7 | 500137-02 | Cam & Adjustment Plate Assembly (Incls. items 8-13) | 1 | |
| 8 | 510108 | Cam | 1 | |
| 9 | 800431 | Hex Socket Cone Point Set Screw #8-32x0.25 | 3 | |
| 10 | 800389 | Hex Socket Button Head Screw1/4-28 | 1 | |
| 11 | 300199 | Adjustment Plate | 1 | |
| 12 | 800391 | Hex Socket Button Head Screw #8-32x0.25 | 2 | |
| 13 | 800390 | Hex Socket Cap Head Screw 8-32x0.312 | 1 | |



© Globe Food Equipment Company

# S213A Gauge Plate Components

2 [ 3-7

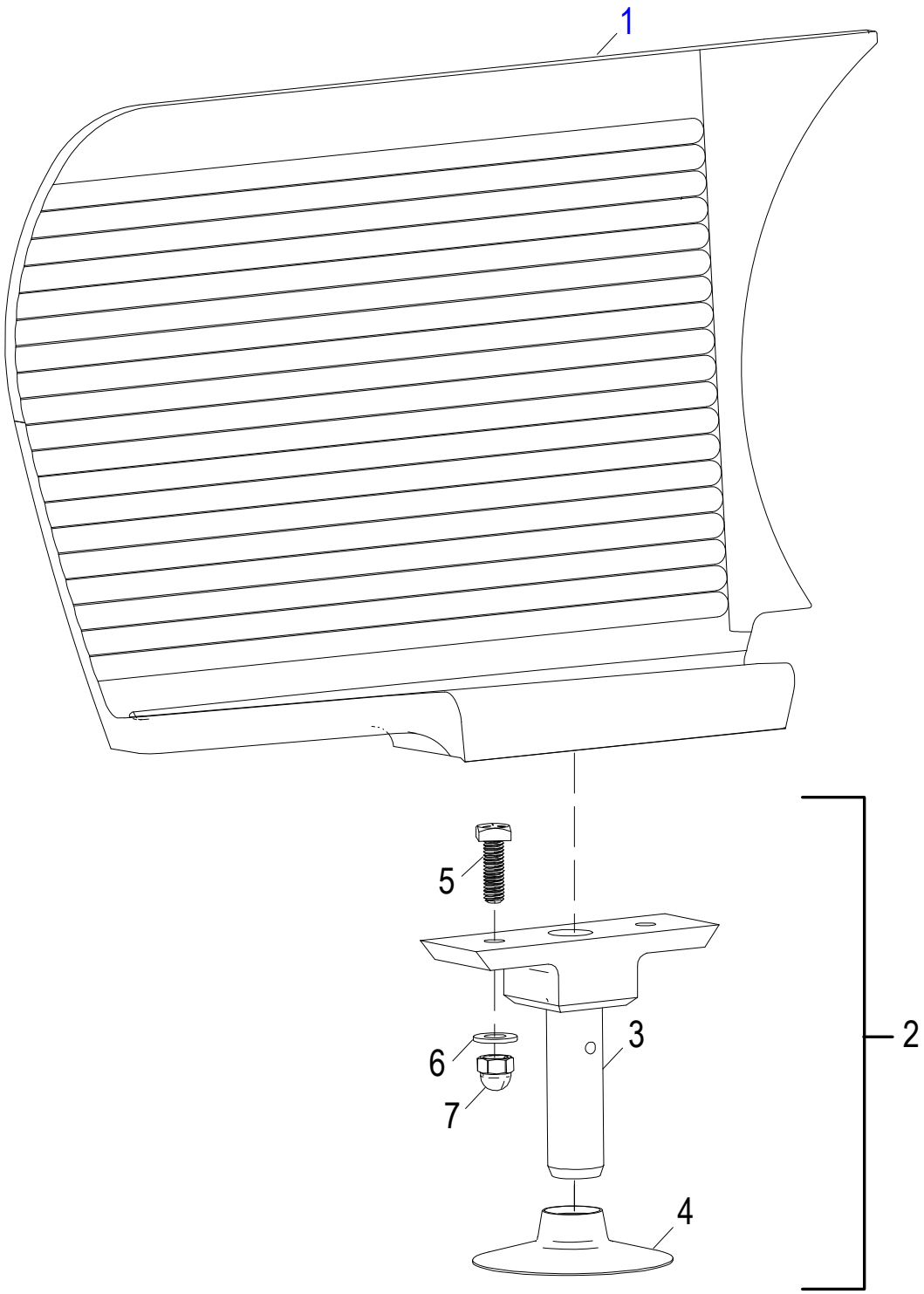




© Globe Food Equipment Company

# S213A Gauge Plate Components

| Item | Part Number | Description | Qty | Serial Number |
|---|---|---|---|---|
| 1 | 400308 | Gauge Plate | 1 | |
| 2 | 400272 | Post Mount Assembly Kit (Incls. items 3-7) | 1 | |
| 3 | 400098 | Post Mount Assembly | 1 | |
| 4 | 550014 | Gauge Plate Boot | 1 | |
| 5 | 800387 | Square Head Screw 5/16-18 x 1.00 | 2 | |
| 6 | 800049 | Flat Washer 5/16 x 0.69 | 2 | |
| 7 | 800388 | Cap Nut 5/16-18 x 0.531 | 2 | |



© Globe Food Equipment Company

# S213A Knife Cover Components

2 [ 3 & 4

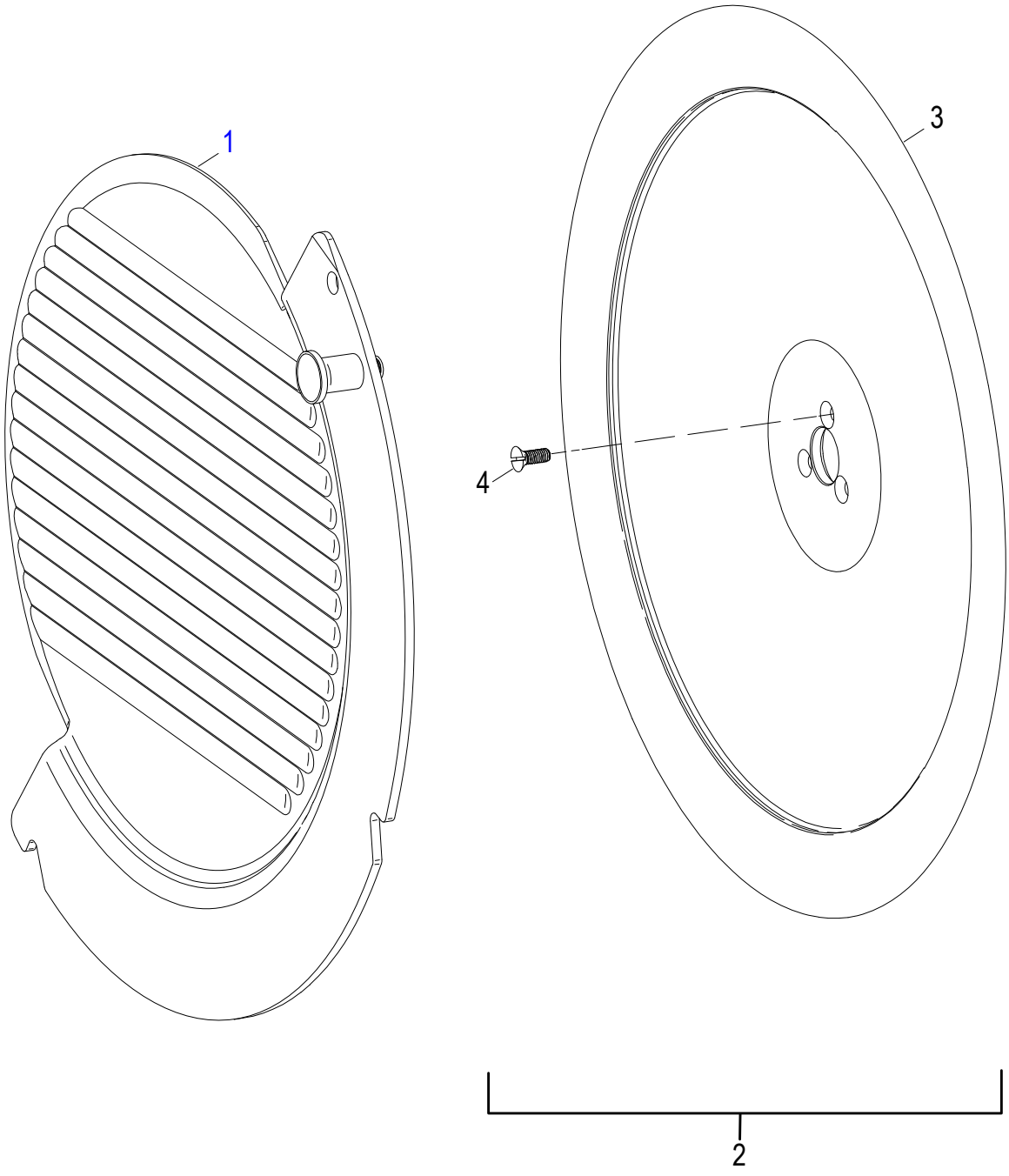




© Globe Food Equipment Company

# S213A Knife Cover Components

| Item | Part Number | Description | Qty | Serial Number |
|---|---|---|---|---|
| 1 | 300185 | Knife Cover Assembly | 1 | |
| 2 | 400139-01 | Knife Kit (Incls. items 3 & 4) | 1 | |
| 3 | 450170 | 13 Inch Steel Knife | 1 | |
| 4 | 810274 | Slotted Flat Head Screw,10-32x0.5 | 3 | |



© Globe Food Equipment Company

# S213A Knife Drive Components

1 2-7

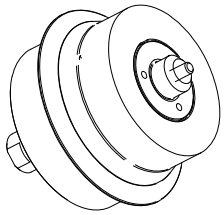

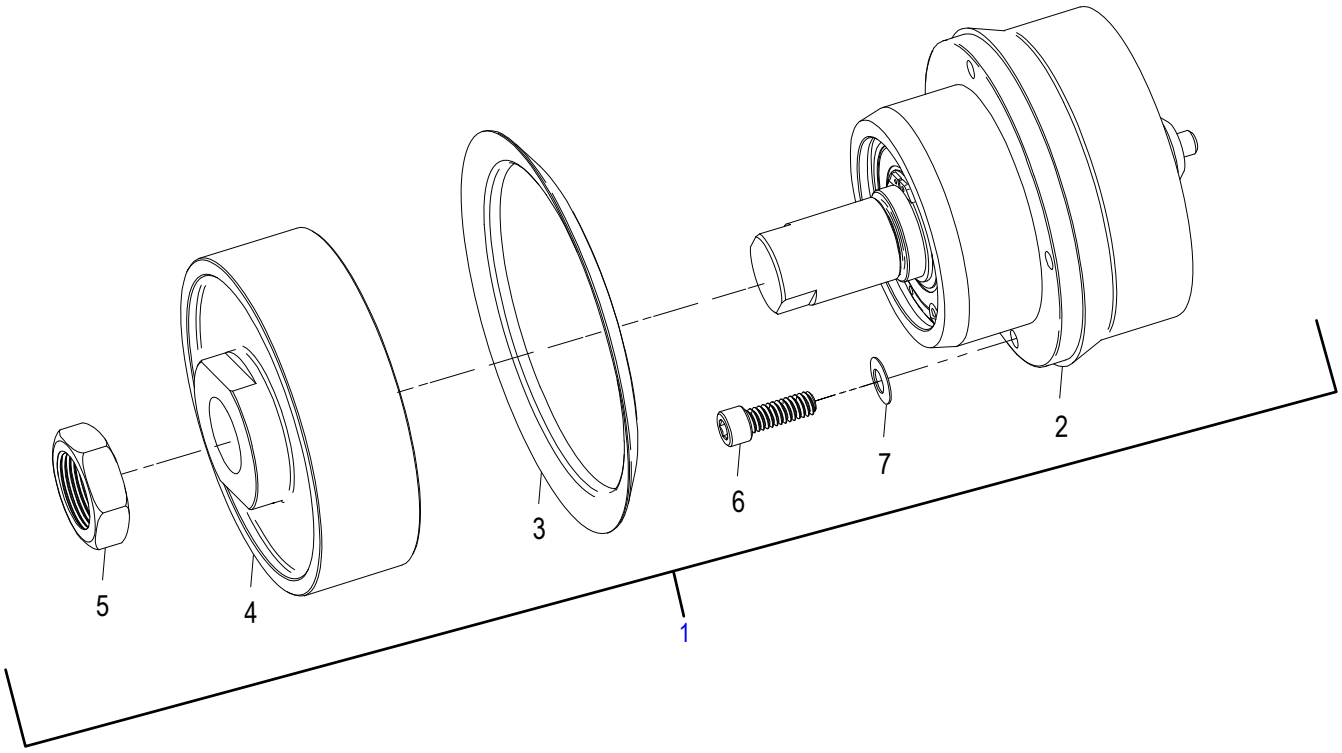




© Globe Food Equipment Company

# S213A Knife Drive Components

| Item | Part Number | Description | Qty | Serial Number |
|---|---|---|---|---|
| 1 | 400270 | Knife Drive Assembly (Incls. items 2-7) | 1 | |
| 2 | 420088 | Knife Drive Bearing Assembly | 1 | |
| 3 | 520244 | Knife Drive Boot | 1 | |
| 4 | 450032 | Knife Drive Pulley | 1 | |
| 5 | 510033 | Hex Nut, 7/8-20 Zinc | 1 | |
| 6 | 810229 | Socket Head Cap Screw 1/4-20x0.75 | 4 | |
| 7 | 810275 | Spring Washer, 1/4x0.5 | 4 | |



© Globe Food Equipment Company

# S213A Knife Drive Motor Components

2 — 3-5
9 — 10 & 11
13 — 14-17

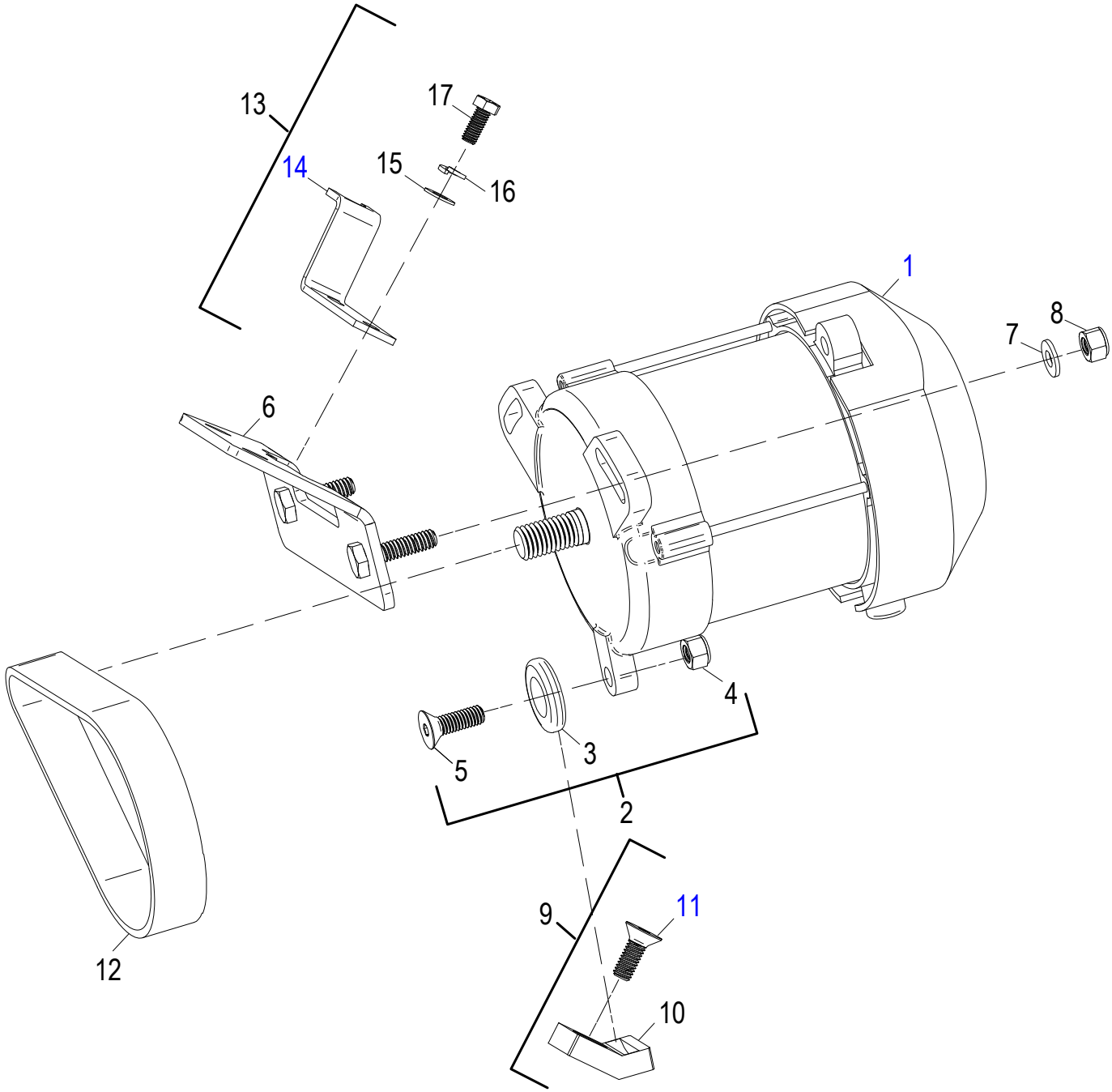




© Globe Food Equipment Company

# S213A Knife Drive Motor Components

| Item | Part Number | Description | Qty | Serial Number |
|---|---|---|---|---|
| 1 | 140140 | Knife Drive Motor, Single Phase | 1 | |
| 2 | 100066 | Knife Motor Pivot Kit | 1 | |
| 3 | 510107 | Knife Motor Pivot Disc | 1 | |
| 4 | 810420 | Nylon Insert Locknut 5/16-18 | 1 | |
| 5 | 800437 | Hex Socket Flat Head Screw 5/16-18x1.00 | 1 | |
| 6 | 300166 | Motor Mount Bracket (incls. welded hex head screws) | 1 | |
| 7 | 810345 | Flat Washer, 1/4 x 0.63 | 2 | |
| 8 | 810438 | Nylon Insert Lock Nut 1/4-20 | 2 | |
| 9 | 400271 | Drive Motor Pivot Block Kit (Incls. items 10-11) | 1 | |
| 10 | 460256 | Drive Motor Pivot Block | 1 | |
| 11 | 800281 | Hex Socket Flat Head Screw 5/16-8x.875 | 1 | |
| 12 | 500093 | Knife Drive Belt | 1 | |
| 13 | 300240 | Tall Post Support Kit (Incls. items 14-17) | 1 | |
| 14 | 300229 | Tall Post Support | 1 | |
| 15 | 810416 | Flat Washer, 5/16 x 0.69 | 2 | |
| 16 | 800248 | Split Lock Washer, 5/16 x 0.58 | 2 | |
| 17 | 800520 | Hex Head Screw 5/16-18x0.875 | 2 | |



© Globe Food Equipment Company

# S213A Ring Guard Assembly Components

1 ┌ 2-3, 5-8, 10-14 & 16-23
4 ┌ 5-8
9 ┌ 10-12
15 ┌ 16-20

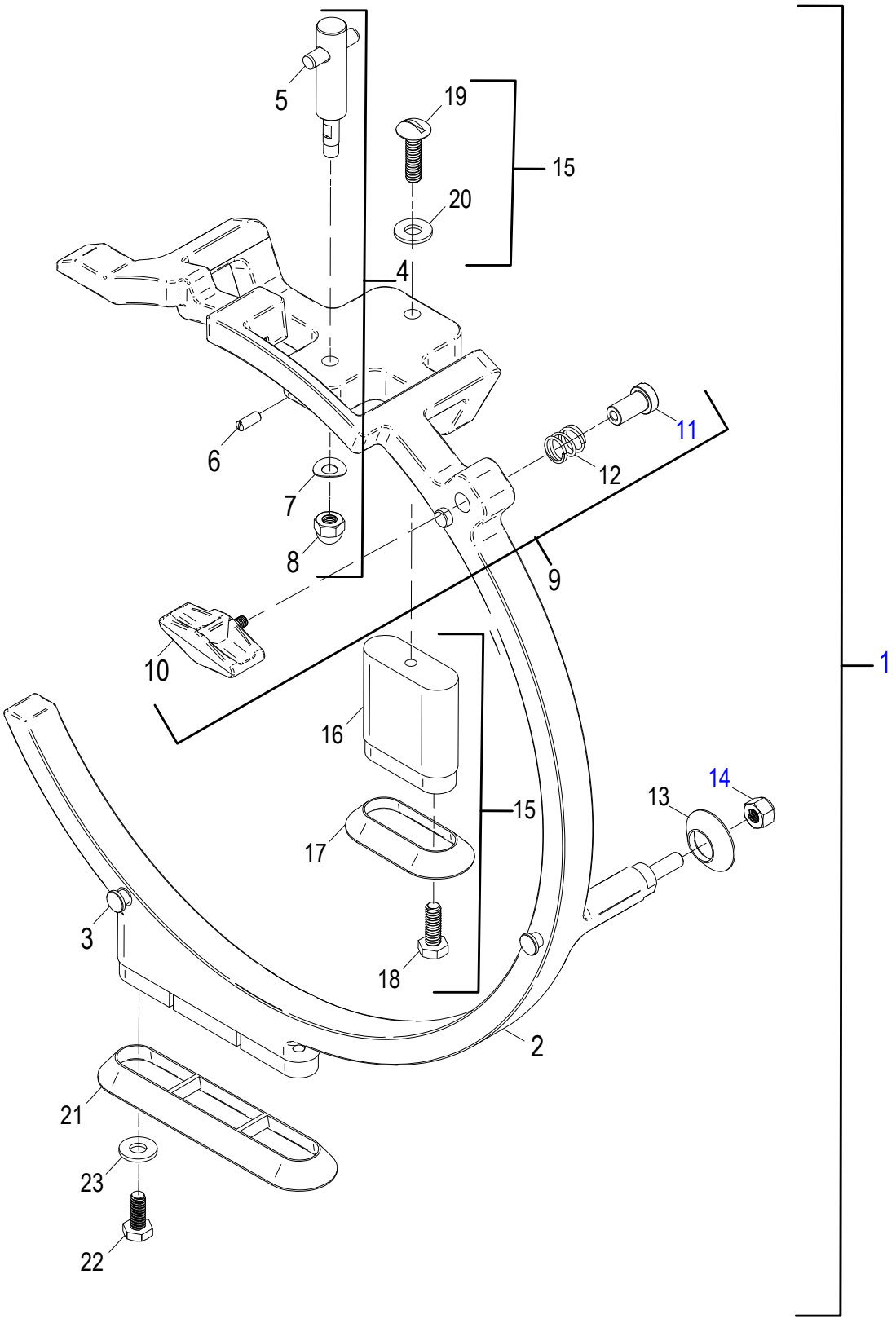




© Globe Food Equipment Company

# S213A Ring Guard Assembly Components

| Item | Part Number | Description | Qty | Serial Number |
|---|---|---|---|---|
| 1 | 500140-01 | Ring Guard Assembly Kit (Incls. items 2-3,5-8,10-14 & 16-23) | 1 | |
| 2 | 510135 | Ring Guard | 1 | |
| 3 | 450130 | Locator Pin | 2 | |
| 4 | 460069-01 | Sharpener Mount Kit, Standard (Incls. items 5-8) | 1 | |
| 5 | 450131-01 | Sharpener Mount Assembly | 1 | |
| 6 | 810483 | Slotted Set Screw, #10-32x0.50 | 1 | |
| 7 | 800184 | Spring Washer 0.26x0.55x0.015 | 1 | |
| 8 | 800185 | Acorn Nut, 1/4-28 | 1 | |
| 9 | 500141 | Knife Cover Lock Knob Kit (Incls. items 10-12) | 1 | |
| 10 | 510105 | Knife Cover Lock Knob | 1 | |
| 11 | 460251 | Cover Lock Cap | 1 | |
| 12 | 810503 | Compression Spring 0.48 x 0.045 Wire x 0.50 | 1 | |
| 13 | 510125 | Post Ring Boot | 1 | |
| 14 | 810438 | Nylon Insert Lock Nut 1/4-20 | 1 | |
| 15 | 200056-01 | Ring Guard Spacer Kit (Incls. items 16-20) | 1 | |
| 16 | 200054 | Ring Guard Spacer | 1 | |
| 17 | 510124 | Upper Ring Boot | 1 | |
| 18 | 810431 | Hex Head Screw 1/4-20x0.75 | 2 | |
| 19 | 810358 | Slotted Truss Head Screw 1/4-20 x 1.00 | 1 | |
| 20 | 810345 | Flat Washer, 1/4 x 0.63 | 1 | |
| 21 | 510136 | Lower Ring Boot | 1 | |
| 22 | 800072 | Hex Head Screw ¼-20x0.63 | 2 | |
| 23 | 810345 | Flat Washer, 1/4 x 0.63 | 2 | |



© Globe Food Equipment Company

# S213A Sharpener Assembly Components

1 — 2-42
2 — 3-13
3 — 4-6
7 — 8-10
14 — 15-23
15 — 16-18
24 — 25-35

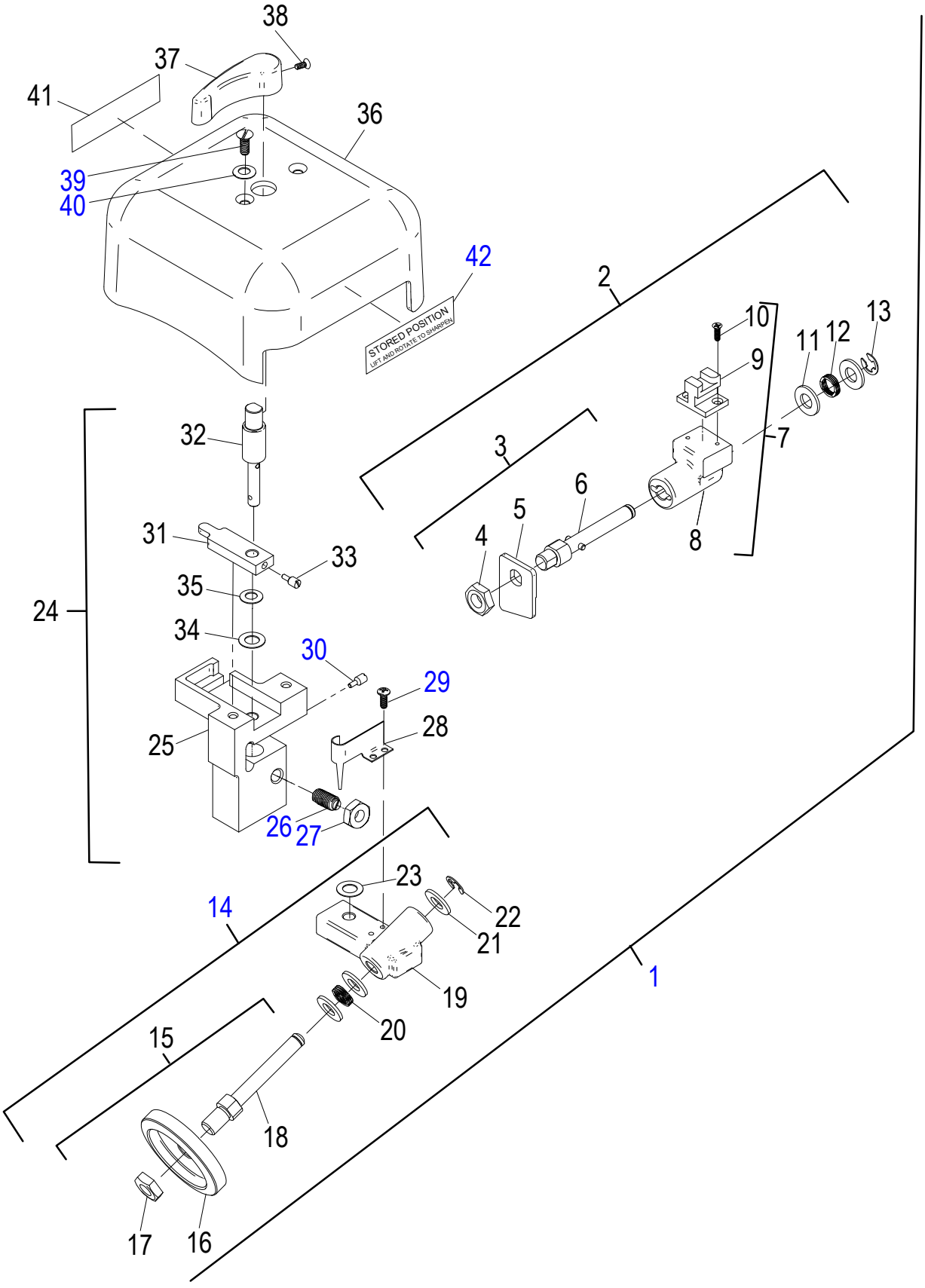




© Globe Food Equipment Company

# S213A Sharpener Assembly Components

| Item | Part Number | Description | | Qty | Serial Number |
|---|---|---|---|---|---|
| 1 | 440044-03 | Grit Sharpener Assembly | (Incl. items 2-42) | 1 | |
| 2 | 430051-02 | Grit Honing Stone Assembly | (Incl. items 3-13) | 1 | |
| 3 | 940033-02 | Grit Honing Stone Shaft Assembly | (Incl. items 4-6) | 1 | |
| 4 | 810430 | Jam Nut 3/8-24 | | 1 | |
| 5 | 200047 | Flat Grit Honing Stone | | 1 | |
| 6 | 450163 | Honing Stone Dowel Assembly | | 1 | |
| 7 | 400291 | Honing Stone Bracket Kit | | 1 | |
| 8 | 430032 | Honing Stone Bracket | | 1 | |
| 9 | 430042 | Honing Stone Slide | | 1 | |
| 10 | 810222 | Phillips Flat Head Screw #4-40 x 0.38 | | 2 | |
| 11 | 810272 | Flat Washer 5/16 x 0.63 | | 2 | |
| 12 | 810362 | Wave Spring 0.38 x 0.49 x 0.14 | | 1 | |
| 13 | 810273 | External Retaining Ring, Type E 0.243 x .50 | | 1 | |
| 14 | 430052-02 | Grit Sharpening Stone Assembly | (Incl. items 15-23) | 1 | |
| 15 | 940044-02 | Grit Sharpening Stone Shaft Assembly | (Incl. items 16-18) | 1 | |
| 16 | 410049 | Grit Sharpening Stone | | 1 | |
| 17 | 810430 | Jam Nut 3/8-24 | | 1 | |
| 18 | 460065 | Sharpening Stone Shaft | | 1 | |
| 19 | 430031 | Sharpening Stone Bracket | | 1 | |
| 20 | 810361 | Wave Spring 0.37 x 0.49 x 0.15 | | 1 | |
| 21 | 810272 | Flat Washer 5/16 x 0.63 | | 3 | |
| 22 | 810273 | External Retaining Ring, Type E 0.243 x .50 | | 1 | |
| 23 | 810437 | Flat Washer 5/16 x 0.57 | | 1 | |
| 24 | 400137 | Sharpener Mount Center Kit | (Incl. items 25-35) | 1 | |
| 25 | 430045 | Sharpener Center Mount | | 1 | |
| 26 | 810488 | Slotted Ball Plunger, 1/4-28 x 0.531 | | 1 | |
| 27 | 810489 | Jam Nut 1/4-28 | | 1 | |
| 28 | 310137 | Sharpener Return Spring | | 1 | |
| 29 | 810271 | Phillips Pan Head Screw #6-32x0.375 | | 2 | |
| 30 | 810344 | Slotted Dog Point Set Screw #10-32 x 0.45 | | 1 | |
| 31 | 430040 | Honing Stone Lever | | 1 | |
| 32 | 400183 | Sharpener Handle Shaft | | 1 | |
| 33 | 810344 | Slotted Dog Point Set Screw #10-32 x 0.45 | | 1 | |
| 34 | 810437 | Flat Washer 5/16 x 0.57 | | 1 | |
| 35 | 800184 | Spring Washer 0.26x0.55x0.015 | | 1 | |
| 36 | 250069 | Sharpener Cover | | 1 | |
| 37 | 500070 | Sharpener Handle, Top | | 1 | |
| 38 | 800223 | Phillips Flat Head Screw #8-32 x 0.375 | | 1 | |
| 39 | 810246 | Slotted Truss Head Screw #10-32 x 0.50 | | 2 | |
| 40 | 810279 | Spring Washer #10 x 0.42 | | 2 | |
| 41 | 920215 | Label, Sharpen Position | | 1 | |
| 42 | 920216 | Label, Stored Position | | 1 | |



© Globe Food Equipment Company

# S213A Lift Arm Components

1 — 2-7
8 — 9-15
9 — 10 & 11
13 — 14 & 15

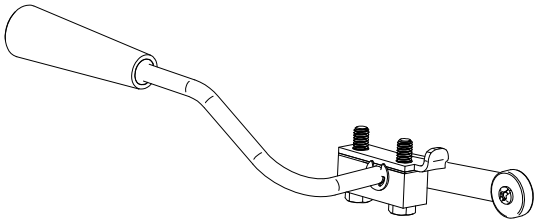

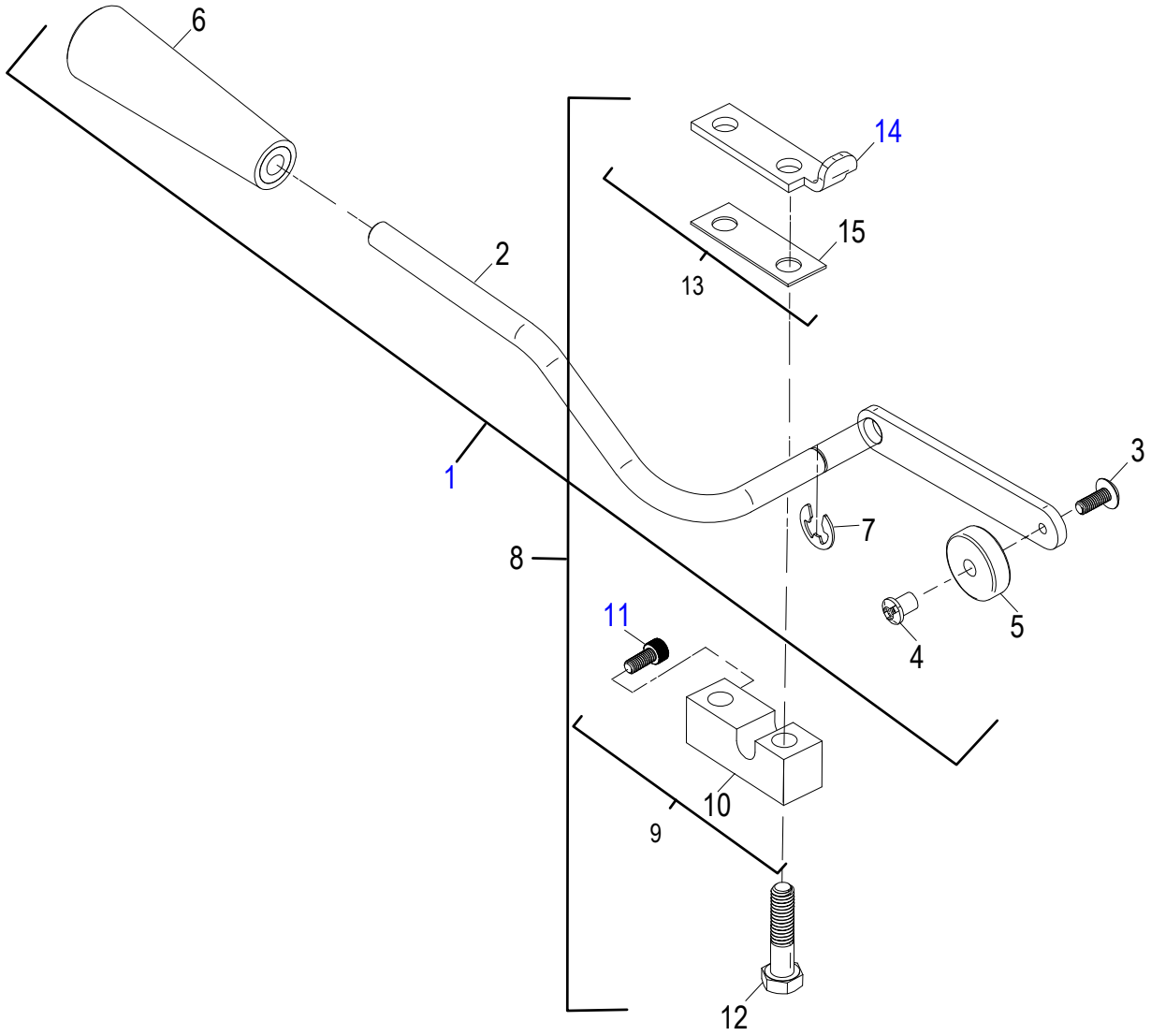




© Globe Food Equipment Company

# S213A Lift Arm Components

| Item | Part Number | Description | Qty | Serial Number |
|---|---|---|---|---|
| 1 | 400213 | Lift Arm Assembly (Incls. items 2-7) | 1 | |
| 2 | 400059 | Lift Lever Weldment | 1 | |
| 3 | 810246 | Slotted Truss Head Screw #10-32 x 0.50 | 1 | |
| 4 | 800304 | Slotted Binding Barrel #10-32 x 0.31 | 1 | |
| 5 | 460274 | Lift Roller 0.251 X 1.00 | 1 | |
| 6 | 951-8 | Lift Lever Handle | 1 | |
| 7 | 800403 | External Retaining Ring Type E 0.375X0.66 | 1 | |
| 8 | 400273-01 | Arm Support Assembly Kit (Incls. items 9-15) | 1 | |
| 9 | 400215 | Arm Support Assembly (Incls. items 10-11) | 1 | |
| 10 | 460275 | Arm Support | 1 | |
| 11 | 800351 | Hex Socket Cap Head Screw #10-32x0.44 | 1 | |
| 12 | 800397 | Hex Head Screw 5/16-18 x1.375 | 2 | |
| 13 | 400214 | Lift Support Base Assembly (Incls. items 13-14) | 1 | |
| 14 | 300192 | Lift Support Stop Base | 1 | |
| 15 | 500103 | Lift Support Wear Strip | 1 | |



© Globe Food Equipment Company

# S213A Index Plate Assembly Components

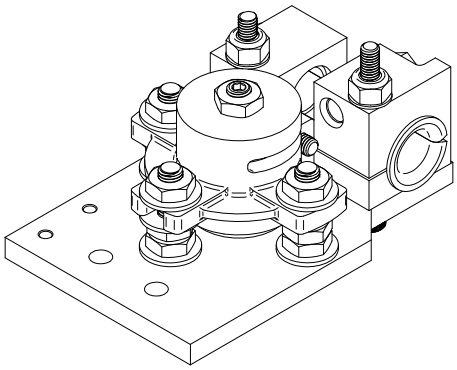

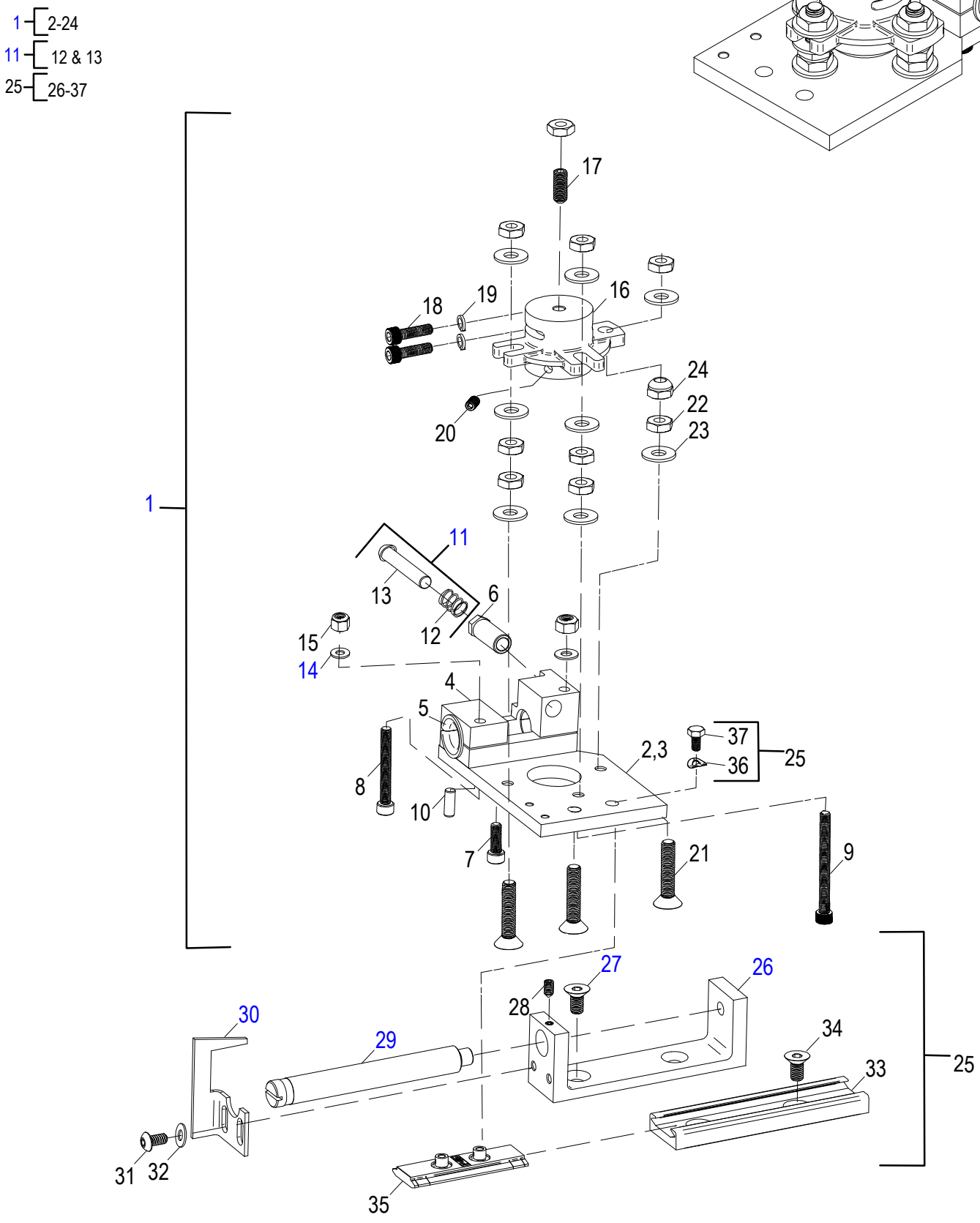




© Globe Food Equipment Company

# S213A Index Plate Assembly Components

| Item | Part Number | Description | Qty | Serial Number |
|---|---|---|---|---|
| 1 | 460350 | Index Plate Assembly (Incls. items 2-24) | 1 | |
| 2 | 460338 | Index Carriage Block Assembly (Incls. items 3-10) | 1 | |
| 3 | 460333 | Index Carriage Plate | 1 | |
| 4 | 460306 | Index Slide and Follower Mount | 1 | |
| 5 | 800365 | Glide Shoulder Bushing 0.50 x 0.75 Not Shown | 2 | |
| 6 | 450152 | Follower Adjustment Post | 1 | |
| 7 | 800132 | Hex Socket Cap Head Screw #10-32 x0.562 | 1 | |
| 8 | 800371 | Hex Socket Cap Screw 10-32x1.50 | 1 | |
| 9 | 800372 | Hex Socket Cap Screw 10-32 x 2.0 | 1 | |
| 10 | 800501 | Dowel Pin 3/16 Dia. x 0.50 | 2 | |
| 11 | 400275 | Follower Kit (Incls. items 12-13) | 1 | |
| 12 | 800438 | Compression Spring 0.360x 0.045 Wire Dia x 0.375 | 1 | |
| 13 | 460258 | Follower | 1 | |
| 14 | 810278 | Flat Washer, No.10x0.44 | 2 | |
| 15 | 800231 | Nylon Insert Lock Nut #10-32 | 2 | |
| 16 | 460259 | Post Adjust | 1 | |
| 17 | 810403 | Hex Socket Cup Point Set Screw 1/4-28x0.625 | 1 | |
| 18 | 810522 | Hex Socket Cap Head Screw 10-32x0.687 | 2 | |
| 19 | 800370 | Split Lock Washer #10x0.294 | 2 | |
| 20 | 800432 | Hex Socket Cone Point Set Screw 10-32x0.375 | 1 | |
| 21 | 800369 | Hex Socket Flat Head Screw 1/4-28x1.25 | 3 | |
| 22 | 810489 | Jam Nut 1/4-28 | 9 | |
| 23 | 810410 | Flat Washer 0.266x0.625 | 8 | |
| 24 | 810510 | Hex Pivot Nut 1/4-28 | 1 | |
| 25 | 400276 | Index Carriage Rail Kit (Incls. items 25-37) | 1 | |
| 26 | 460304 | Index Carriage Rail Base | 1 | |
| 27 | 800380 | Slotted Flat Head Screw 8-32 x 0.375 | 2 | |
| 28 | 800091 | Hex Socket Knurl-Cup Point Set Screw 8-32 X 0.1875" | 1 | |
| 29 | 460305 | Index Carriage Rail Shaft | 1 | |
| 30 | 300218 | Index Stop | 1 | |
| 31 | 800077 | Hex Socket Button Head Screw #10-24 x 0.375 | 2 | |
| 32 | 810279 | Spring Washer #10 x 0.42 | 2 | |
| 33 | 460300 | Index Glide Rail | 2 | |
| 34 | 800381 | Hex Socket Flat Head Screw M6 x 1 x 12 mm | 2 | |
| 35 | 500104 | Glide Rail Bearing | 1 | |
| 36 | 800382 | Single Wave Washer 4.3 mm x 9 mm | 2 | |
| 37 | 800383 | Hex Head Screw M4 x 0.7 mm x 8 mm | 2 | |



© Globe Food Equipment Company

# S213A Automatic Drive Assembly Components

1 — 2-29
3 — 4 & 5
9 — 10-12
15 — 16-18
19 — 20-29
32 — 33-40
33 — 34-36
37 — 38-41

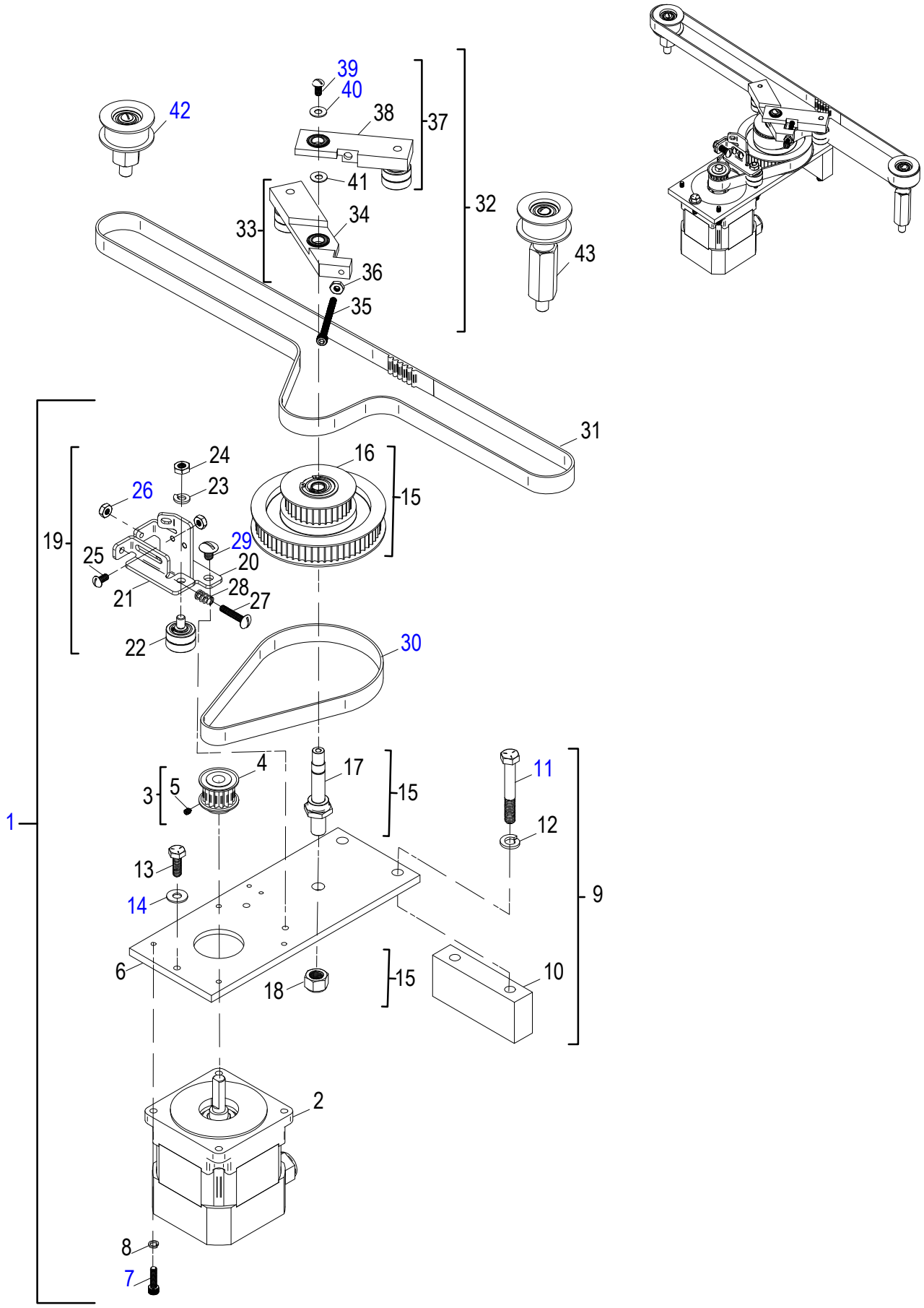




© Globe Food Equipment Company

# S213A Automatic Drive Assembly Components

| Item | Part Number | Description | | Qty | Serial Number |
|---|---|---|---|---|---|
| 1 | 460309 | Automatic Drive Assembly | (Incls. items 2-29) | 1 | |
| 2 | 140141 | Automatic Drive Motor | | 1 | |
| 3 | 400286 | Motor Drive Pulley Assembly Kit | (Incls. items 4-& 5) | 1 | |
| 4 | 400212 | Motor Drive Pulley Assembly 16 Tooth | | 1 | |
| 5 | 800091 | Hex Socket Knurl-Cup Point Set Screw 8-32 X 0.1875" | | 2 | |
| 6 | 460310 | Auto Drive Mount | | 1 | |
| 7 | 810522 | Hex Socket Cap Head Screw 10-32x0.687 | | 4 | |
| 8 | 800370 | Split Lock Washer #10x0.294 | | 4 | |
| 9 | 400288 | Spacer Block Kit | (Incls. items 10-12) | 1 | |
| 10 | 460332 | Spacer Block | | 1 | |
| 11 | 800417 | Hex Head Screw 5/16-18x2.25 | | 2 | |
| 12 | 800248 | Split Lock Washer, 5/16 x 0.58 | | 2 | |
| 13 | 810431 | Hex Head Screw 1/4-20x0.75 | | 1 | |
| 14 | 810410 | Flat Washer 0.266x0.625 | | 1 | |
| 15 | 400289 | Dual Pulley Shaft Kit | (Incls. items 16-18) | 1 | |
| 16 | 460317 | One Piece Dual Pulley Assembly | | 1 | |
| 17 | 460316 | Dual Pulley Shaft | | 1 | |
| 18 | 810524 | Nylon Insert Lock Nut 7/16-20 | | 1 | |
| 19 | 400287 | Drive Bracket Tensioner Kit | (Incls. items 20-29) | 1 | |
| 20 | 460312 | Drive Tension Bracket | | 1 | |
| 21 | 460313 | Drive Bracket Tensioner | | 1 | |
| 22 | 460327 | Tensioner Shaft Assembly | | 1 | |
| 23 | 800440 | Split Lock Washer 1/4x0.487 | | 1 | |
| 24 | 810432 | Jam Nut 1/4-20 | | 1 | |
| 25 | 800237 | Slotted Round Head Screw 10-32x0.375 | | 2 | |
| 26 | 810458 | Nylon Insert Lock Nut #10-32 | | 3 | |
| 27 | 800241 | Slotted Truss Head Screw 10-32 x1.00 | | 1 | |
| 28 | 810515 | Compression Spring 0.30x0.035x0.50 | | 1 | |
| 29 | 810518 | Slotted Truss Head Screw 1/4-20x0.375 | | 2 | |
| 30 | 460325 | Automatic Drive Belt | | 1 | |
| 31 | 460326 | Automatic Drive Belt | | 1 | |
| 32 | 400290 | Tensioner Assembly Kit | (Incls. items 33-41) | 1 | |
| 33 | 400404 | Bottom Tensioner Kit | (Incls. items 34-36) | 1 | |
| 34 | 400224 | Bottom Tensioner Assembly | | 1 | |
| 35 | 800372 | Hex Socket Cap Screw 10-32 x 2.0 | | 1 | |
| 36 | 800125 | Hex Nut, #10-32 SST | | 1 | |
| 37 | 400403 | Top Tensioner Kit | (Incls. items 38-41) | 1 | |
| 38 | 400225 | Top Tensioner Assembly | | 1 | |
| 39 | 800237 | Slotted Round Head Screw 10-32x0.375 | | 1 | |
| 40 | 800076 | Flat Washer, #10x0.50 | | 1 | |
| 41 | 800515 | Flat Washer, 1.000 X .357 X .015 | | 1 | |
| 42 | 460290-01 | Short Standoff Idler Assembly | | 1 | |
| 43 | 460290-02 | Tall Standoff Idler Assembly | | 1 | |
| 44 | 140142 | Loop Clamp 0.25x0.81 | (Not Shown) | 2 | |
| 45 | 800069 | Phillips Round Head Thread Forming Screw 8-32 x 0.375" | (Not Shown) | 2 | |



© Globe Food Equipment Company

# S213A Transport Assembly Components

2 – 3-4
6 – 7-22
17 – 18-22
23 – 24-27
28 – 29-36
31 – 32-35
37 – 38-41
42 – 43 & 44

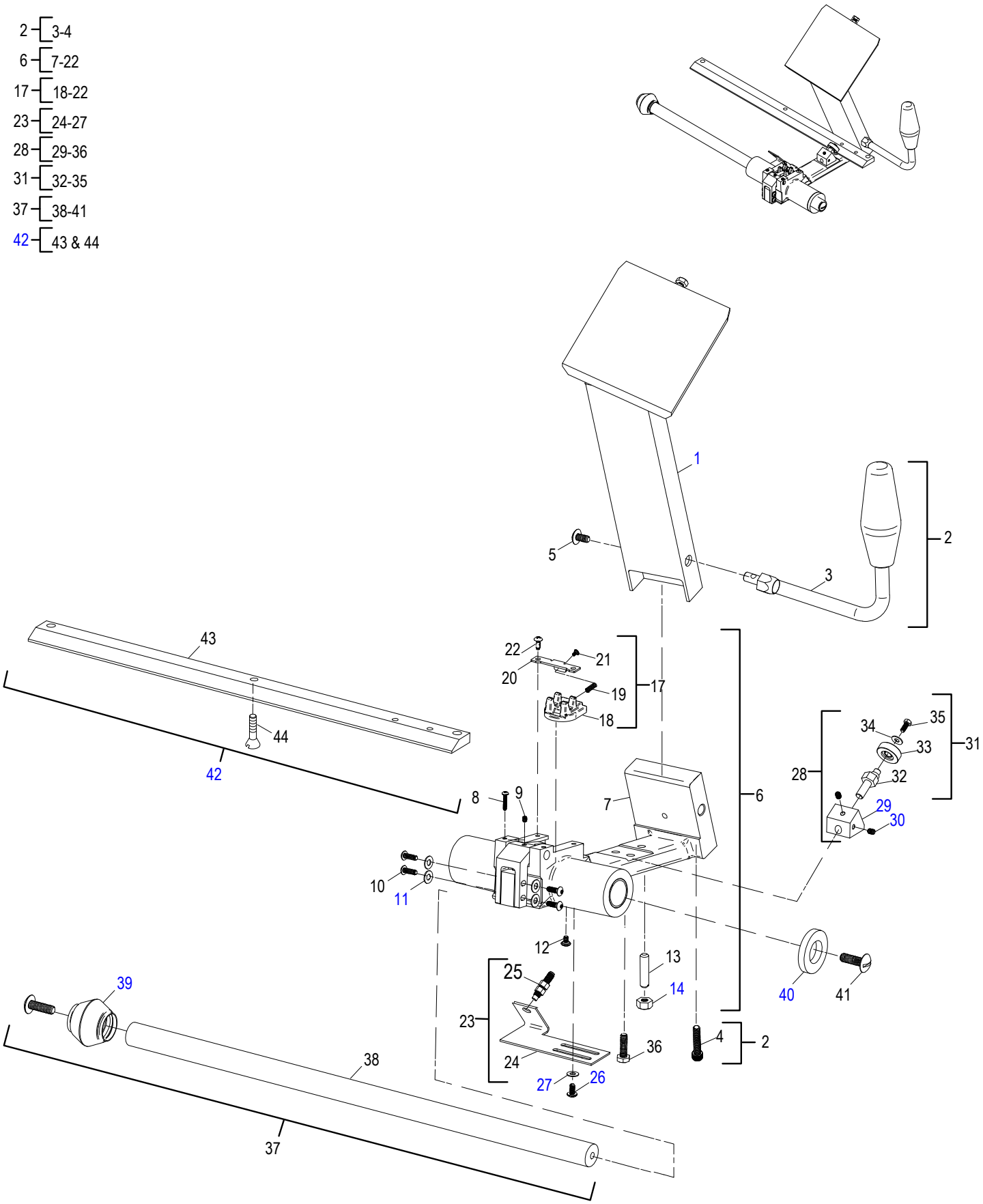




© Globe Food Equipment Company

# S213A Transport Assembly Components

| Item | Part Number | Description | | Qty | Serial Number |
|---|---|---|---|---|---|
| 1 | 400227 | Carriage Arm & Mount Assembly | | 1 | |
| 2 | 400279 | Carriage Operator Handle Arm with Lock Nut | (Incls. Items 3 & 4) | 1 | |
| 3 | 400208 | Carriage Operator Handle Assembly | | 1 | |
| 4 | 800378 | Hex Socket Cap Head Screw 1/4-20x1.375 | | 1 | |
| 5 | 800423 | Slotted Wide Truss Head Screw 1/4-20x0.50 | | 2 | |
| 6 | 460266 | Automatic Transport Assembly | (Incls. Items 7-22) | 0 | |
| 7 | 460265 | Machined Automatic Transport | | 1 | |
| 8 | 800435 | Phillips Pan Head Screw 5-40X0.63 | | 2 | |
| 9 | 800091 | Hex Socket Knurl-Cup Point Set Screw 8-32 X 0.1875" | | 1 | |
| 10 | 800302 | Hex Socket Button Head Screw 8-32x0.50 | | 4 | |
| 11 | 810278 | Flat Washer, No.10x0.44 | | 4 | |
| 12 | 810232 | Phillips Pan Head Sealing Screw 8-32 x 0.25" | | 1 | |
| 13 | 800015 | Transport Tie Down Screw 5/16-24x1.30" | | 1 | |
| 14 | 800048 | Hex Nut 5/16-24 | | 1 | |
| 15 | 810500 | Felt Oil Ring | Not Shown | 1 | |
| 16 | 810501 | Glide Bushing - 7/8" x 1.00" | Not Shown | 1 | |
| 17 | 500139 | Auto Engage Slide Kit | (Incls. Items 18-22) | 1 | |
| 18 | 500097 | Auto Engage Slide | | 1 | |
| 19 | 800107 | Slide Spring | | 1 | |
| 20 | 300210 | Engagement Slide Stop Bracket | | 1 | |
| 21 | 810423 | Phillips Pan Head Screw 4-40 x 0.25" | | 1 | |
| 22 | 800069 | Phillips Round Head Thread Forming Screw 8-32 x 0.375" | | 2 | |
| 23 | 100048 | Magnet Mount Bracket Kit | (Incls. Items 24-27) | 1 | |
| 24 | 300232 | Magnet Mount Bracket | | 1 | |
| 25 | 100011 | Threaded M8 Magnet | | 1 | |
| 26 | 800410 | Phillips Pan Head Screw 10-24 x 0.375 | | 4 | |
| 27 | 810278 | Flat Washer, No.10x0.44 | | 4 | |
| 28 | 400282 | Eccentric Kit | (Incls. Items 29-36) | 1 | |
| 29 | 400219 | Eccentric Roller Block | | 1 | |
| 30 | 800094 | Hex Socket Knurl-Cup Point Set Screw 10-32 x 0.25 | | 2 | |
| 31 | 400281 | Eccentric Roller Shaft Kit | (Incls. Items 32-35) | 0 | |
| 32 | 400218 | Eccentric Roller Shaft | | 1 | |
| 33 | 520234 | Roller Bearing Assembly, Press Fit | | 1 | |
| 34 | 870072 | Flat Washer, #8 x 0.44 | | 1 | |
| 35 | 800099 | Hex Head Screw #8-32x0.375 | | 1 | |
| 36 | 800329 | Hex Head Screw 1/4-20 x 0.875 | | 2 | |
| 37 | 400283 | Transport Shaft Kit | (Incls. Items 38-41) | 1 | |
| 38 | 460207 | Transport Shaft | | 1 | |
| 39 | 800427 | Sleeved Spring Assembly | | 1 | |
| 40 | 500119 | Transport Bumper | | 1 | |
| 41 | 800071 | Slotted Truss Head Screw 5/16-18x1.0 | | 2 | |
| 42 | 400285 | Transport Roller Bar Kit | (Incls. Items 43 & 44) | 1 | |
| 43 | 460206 | Transport Roller Bar | | 1 | |
| 44 | 800411 | Slotted Flat Head Screw 1/4-20x0.75 | | 1 | |



© Globe Food Equipment Company

# S213A Auto Engage Lever Components

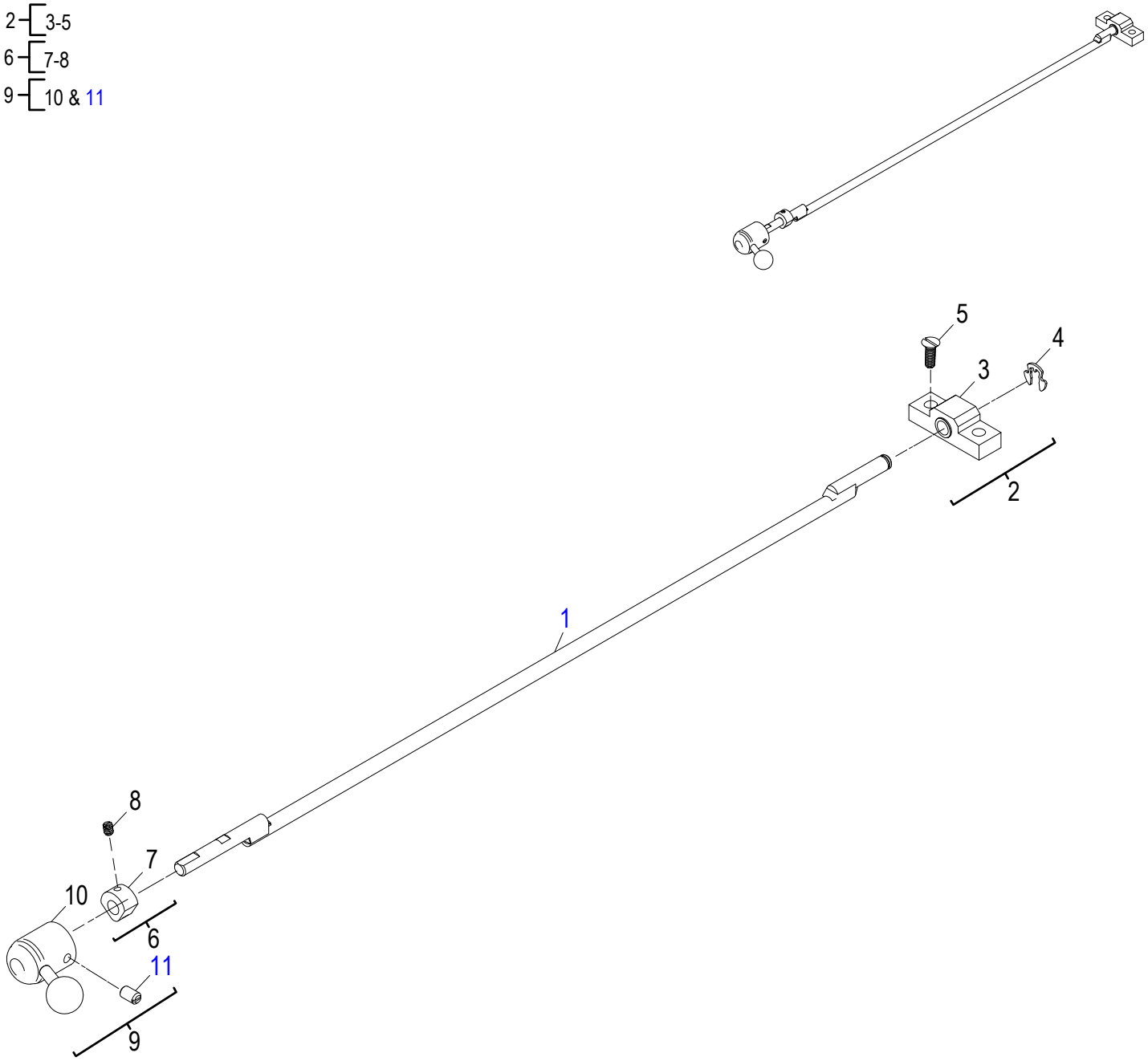




© Globe Food Equipment Company

# S213A Auto Engage Lever Components

| Item | Part Number | Description | Qty | Serial Number |
|---|---|---|---|---|
| 1 | 400075 | Auto Engage Weldment Bar Assembly | 1 | |
| 2 | 400269 | Bearing Block Assembly Kit (Incls. items 3-5) | 1 | |
| 3 | 400077 | Bearing Block Assembly | 1 | |
| 4 | 810429 | External Retaining Ring 0.25x0.042 | 1 | |
| 5 | 800525 | Slotted Flat Head Screw1/4-20 x 5/8 | 2 | |
| 6 | 500138 | Engage Position Stop Assembly (Incls. items 7-8) | 1 | |
| 7 | 500106 | Engage Position Stop | 1 | |
| 8 | 800412 | Slotted Knurl-Cup Set Screw 10-24 X 0.25 | 1 | |
| 9 | 400081 | Lever Hub Assembly (Incls. items 10-11) | 1 | |
| 10 | 400079 | Auto Engage Lever Hub | 1 | |
| 11 | 810253 | Slotted Cup Point Set Screw 1/4-20 x .42 | 1 | |



© Globe Food Equipment Company

# S213A Carriage Tray Assembly Components

1 — 2-36
3 — 5-11 & 13-17
4 — 5-11
12 — 13-17
18 — 19-22
24 — 25-32
25 — 26-27
29 — 30-31
33 — 34-36

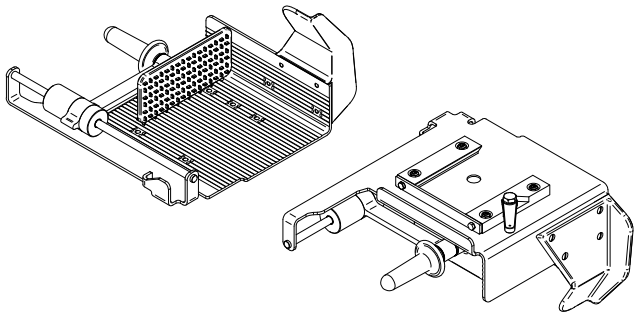

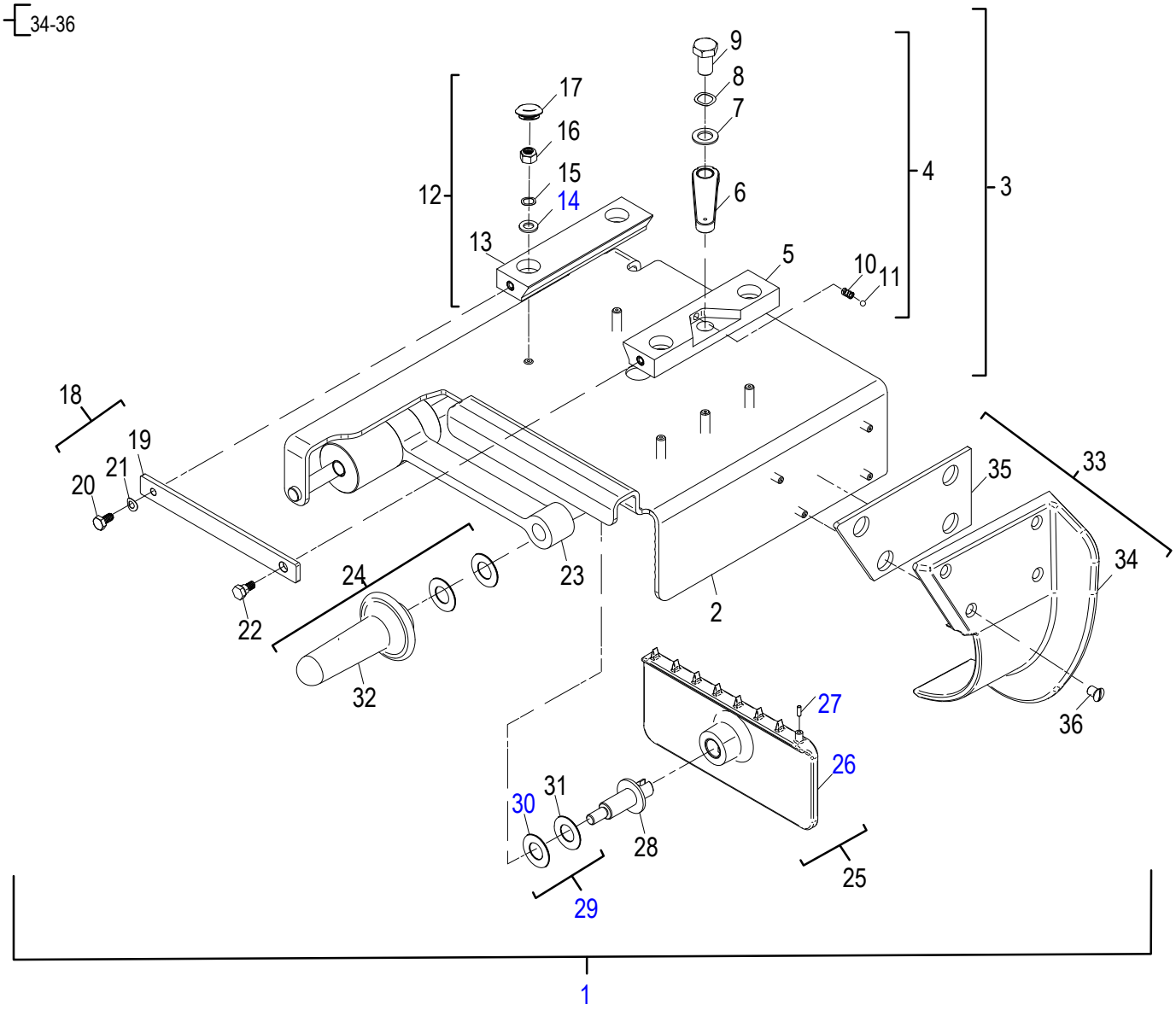




© Globe Food Equipment Company

# S213A Carriage Tray Assembly Components

| Item | Part Number | Description | | Qty | Serial Number |
|---|---|---|---|---|---|
| 1 | 300168 | Carriage Tray Assembly | (Incls. items 2-36) | 1 | |
| 2 | 300248 | Carriage Tray Stud Inserts | | 1 | |
| 3 | 500145 | Carriage Mount Receiver Kit | (Incls. items 5-11 & 13-17) | 1 | |
| 4 | 500146-01 | Carriage Mount Clamping Receiver Kit | (Incls. items 5-11) | 1 | |
| 5 | 510112 | Carriage Mount Clamping Receiver Assembly | | 1 | |
| 6 | 400053 | Carriage Lever Lock Assembly | | 1 | |
| 7 | 800359 | Flat Washer 1/2 x 0.885 | | 1 | |
| 8 | 800358 | Wave Spring Washer 1/2 x 0.734 | | 1 | |
| 9 | 460262 | Lever Stud | | 1 | |
| 10 | 800361 | Compression Spring 0.24x0.029x0.375 | | 1 | |
| 11 | 800362 | Ball 7/32 | | 1 | |
| 12 | 500150 | Carriage Mount Stationary Receiver Kit | (Incls. items 13-17) | 1 | |
| 13 | 510113 | Carriage Mount Stationary Receiver Assembly | | 1 | |
| 14 | 810272 | Flat Washer 5/16 x 0.63 | | 4 | |
| 15 | 800354 | Wave Spring Washer 0.35x0.492 | | 4 | |
| 16 | 810420 | Nylon Insert Locknut 5/16-18 | | 4 | |
| 17 | 800360 | Plastic Snap In Panel Plugs 13/16 ID x 0.37 | | 4 | |
| 18 | 400295-01 | Carriage Stop Bar Kit | (Incls. items 19-22) | 1 | |
| 19 | 460263 | Carriage Stop Bar | | 1 | |
| 20 | 800356 | Hex Head Screw 1/4-20 x 0.50 | | 1 | |
| 21 | 870092 | Spring Washer 0.256 x 0.490 | | 1 | |
| 22 | 800367 | Hex Head Shoulder Screw 5/16x0.25_1/4-20x0.375 | | 1 | |
| 23 | 400099 | End Weight Arm Assembly | | 1 | |
| 24 | 500148 | Removable End Weight Kit | (Incls. items 25-32) | 1 | |
| 25 | 500151 | Quarter Turn Removable End Weight Face Kit | (Incls. items 26-27) | 1 | |
| 26 | 500066 | Quarter Turn Removable End Weight Face | | 1 | |
| 27 | 800047 | Delrin Pin, 1/8 Dia x 3/8 | | 1 | |
| 28 | 400178 | Removable End Weight Face CamLock Shaft | | 1 | |
| 29 | 800164 | End Weight Face Washer Kit | (Incls. items 30-31) | 1 | |
| 30 | 800033-01 | End Weight Face Washer | | 2 | |
| 31 | 800033-02 | End Weight Face Washer | | 2 | |
| 32 | 500024 | End Weight Handle | | 1 | |
| 33 | 500147 | Carriage Thumb Guard Kit | (Incls. items 34-36) | 1 | |
| 34 | 500149 | Carriage Thumb Guard | | 1 | |
| 35 | 510038 | Carriage Thumb Guard Gasket | | 1 | |
| 36 | 800363 | Thumb Guard Cap Screw, 1/4-20x0.50 | | 4 | |



© Globe Food Equipment Company

# S213A Electrical Components

- 4 — 5 & 6
- 11 — 12-17
- 19 — 20 & 21
- 23 — 24-28
- 29 — 30-32
- 33 — 34-38 & 40-41
- 39 — 40-41
- 42 — 43-48
- 46 — 47-48
- 50 — 51-54

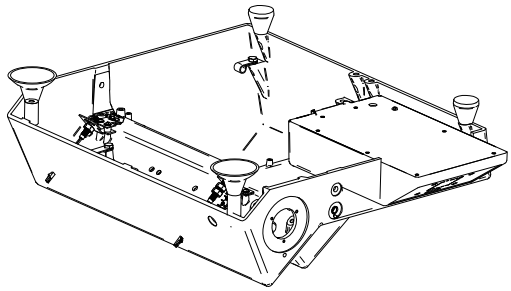

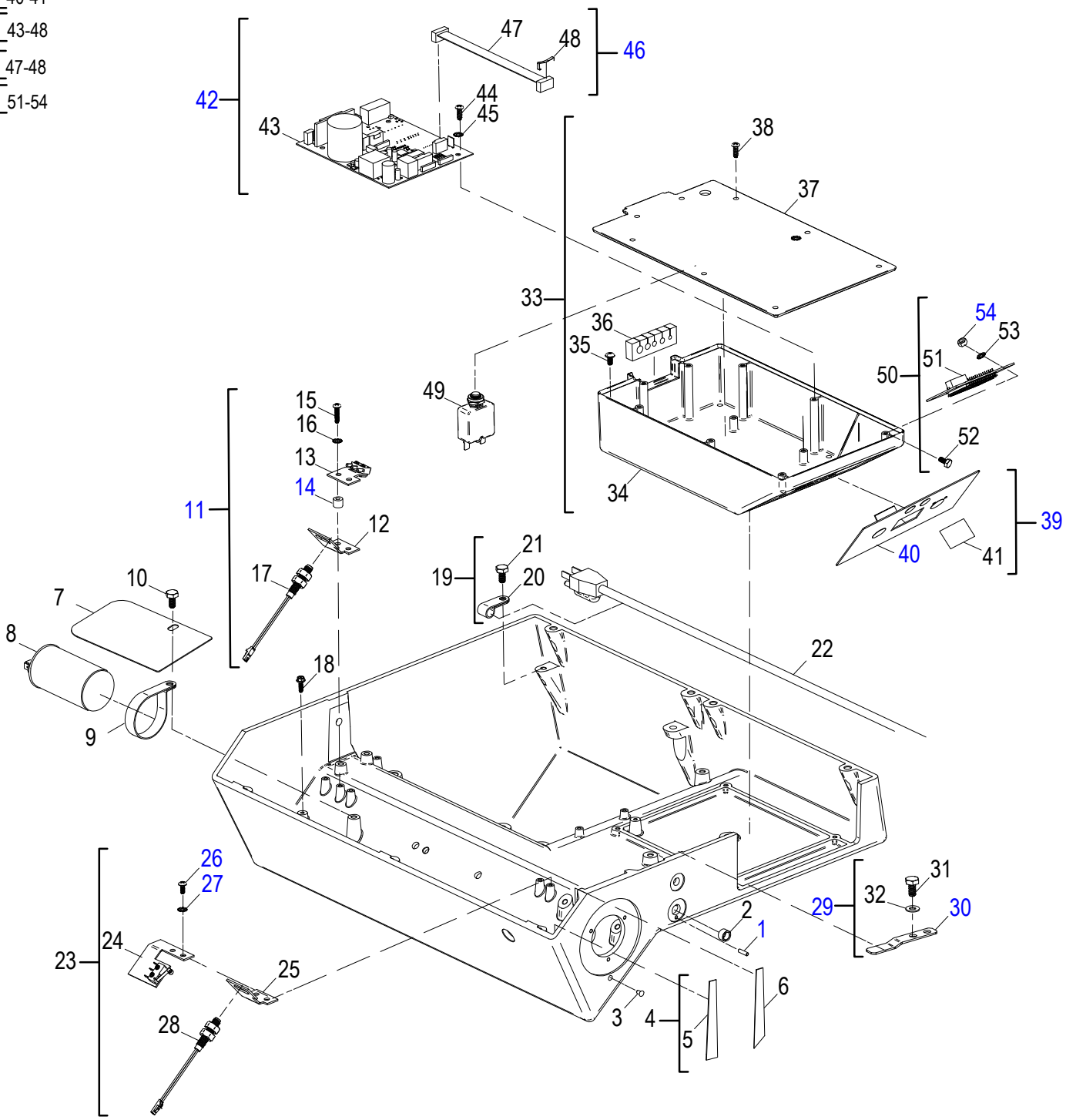




© Globe Food Equipment Company

# S213A Electrical Components

| Item | Part Number | Description | Qty | Serial Number |
|---|---|---|---|---|
| 1 | 810411 | Dowel Pin 1/8 Dia x 0.5 Long | 1 | |
| 2 | 500098 | Sleeve Bearing .3125 x .25 | 1 | |
| 3 | 810434 | Type U Drive Screw, #4 x 1/4 | 1 | |
| 4 | 500142 | PSA Kit (Incls. items 5 & 6) | 1 | |
| 5 | 500108 | PSA Trapezoidal Flat Bearing | 1 | |
| 6 | 500107 | PSA Quadrilateral Flat Bearing | 1 | |
| 7 | 300244 | Capacitor Cover | 1 | |
| 8 | 140015 | Capacitor, Knife Motor 120V | 1 | |
| 9 | 110228 | Capacitor Clamp (120V) | 1 | |
| 10 | 800356 | Hex Head Screw 1/4-20 x 0.50 | 1 | |
| 11 | 100058-01 | Cut/Auto Engage Sensor Kit (Incls. items 12-17) | 1 | |
| 12 | 300233 | Home/Cut Sensor Bracket | 1 | |
| 13 | 300216 | Auto Engage Sensor Assembly | 1 | |
| 14 | 800340 | Standoff | 1 | |
| 15 | 800396 | Phillips Pan Head Screw 8-32 x 0.688 | 2 | |
| 16 | 800115 | External Tooth Lock Washer #8x0.381 | 2 | |
| 17 | 100009 | Reed Sensor | 1 | |
| 18 | 800202 | Green Slotted Hex Washer Head Screw #8-32 x 0.312 | 3 | |
| 19 | 100059 | Power Cord Strain Relief Kit (Incls. items 20 & 21) | 1 | |
| 20 | 110227 | Power Cord Strain Relief | 2 | |
| 21 | 800356 | Hex Head Screw 1/4-20 x 0.50 | 2 | |
| 22 | 100027 | Power Supply Cord 120 VAC 15A | 1 | |
| 23 | 100063 | Table Close/Home Sensor Kit (Incls. items 24-28) | 1 | |
| 24 | 300231 | Table Close Sensor Assembly | 1 | |
| 25 | 300233 | Home/Cut Sensor Bracket | 1 | |
| 26 | 800395 | Phillips Pan Head Screw 8-32 x 0.375 | 2 | |
| 27 | 800115 | External Tooth Lock Washer #8x0.381 | 2 | |
| 28 | 100009 | Reed Sensor | 1 | |
| 29 | 300243 | Position Flat Spring Kit (Incls. items 30-32) | 1 | |
| 30 | 300211 | Postion Flat Spring | 1 | |
| 31 | 800523 | Hex Head Screw 1/4-20 x 7/16 | 2 | |
| 32 | 800079 | Flat Washer, 1/4x0.625 | 2 | |
| 33 | 500143-01 | Electronics Control Box Kit (Incls. items 34-38 & 40-41) | 1 | |
| 34 | 510120 | Electronics Control Box | 1 | |
| 35 | 800524 | Phillips Pan Head Screw10-24 x 5/16 | 4 | |
| 36 | 500110 | Automatic Wireway Entry | 1 | |
| 37 | 510121 | Electronics Box Cover | 1 | |
| 38 | 800392 | Phillips Round Head Thread Forming Screw 8-16x0.5( | 8 | |
| 39 | 100076 | Membrane Switch Kit, Automatic Slicer (Incls. items 40-41) | 1 | |
| 40 | 900050 | Membrane Switch, Automatic Slicer | 1 | |
| 41 | 910088 | Pad, Alcohol Prep | 1 | |
| 42 | 100064-01 | Control Board Kit (Incls. items 43-48) | 1 | |
| 43 | 100014-01 | Automatic Control Board | 1 | |
| 44 | 800392 | Phillips Round Head Thread Forming Screw 8-16x0.5( | 4 | |
| 45 | 800115 | External Tooth Lock Washer #8x0.381 | 4 | |
| 46 | 121081 | Ribbon Cable Kit | 1 | |
| 47 | 100126 | Ribbon Cable Assembly Contol To Display Board | 1 | |
| 48 | 180126 | Retaining Clip, Ribbon Cable | 1 | |
| 49 | 140017-01 | Circuit Breaker | 1 | |
| 50 | 100065 | Display Board Kit (Incls. items 51-54) | 1 | |
| 51 | 100016 | Display Board | 1 | |
| 52 | 800099 | Hex Head Screw #8-32x0.375 | 4 | |
| 53 | 800115 | External Tooth Lock Washer #8x0.381 | 4 | |



© Globe Food Equipment Company

| Item | Part Number | Description | Qty | Serial Number |
|---|---|---|---|---|
| 54 | 800409 | Hex Nut 8-32 | 4 | |
| 55 | 100042 | Sensor Wiring Harness (Not Shown) | 1 | |
| 56 | 100044 | Control Board Ground Wire (Not Shown) | 1 | |
| 57 | 100045 | Cable Tie Mountable (Not Shown) | 8 | |
| 58 | 910043 | 5.5" Cable Tie (Not Shown) | 1 | |



© Globe Food Equipment Company

*INTENTIONALLY LEFT BLANK PAGE*



© Globe Food Equipment Company

# S213A Slicer Schematic

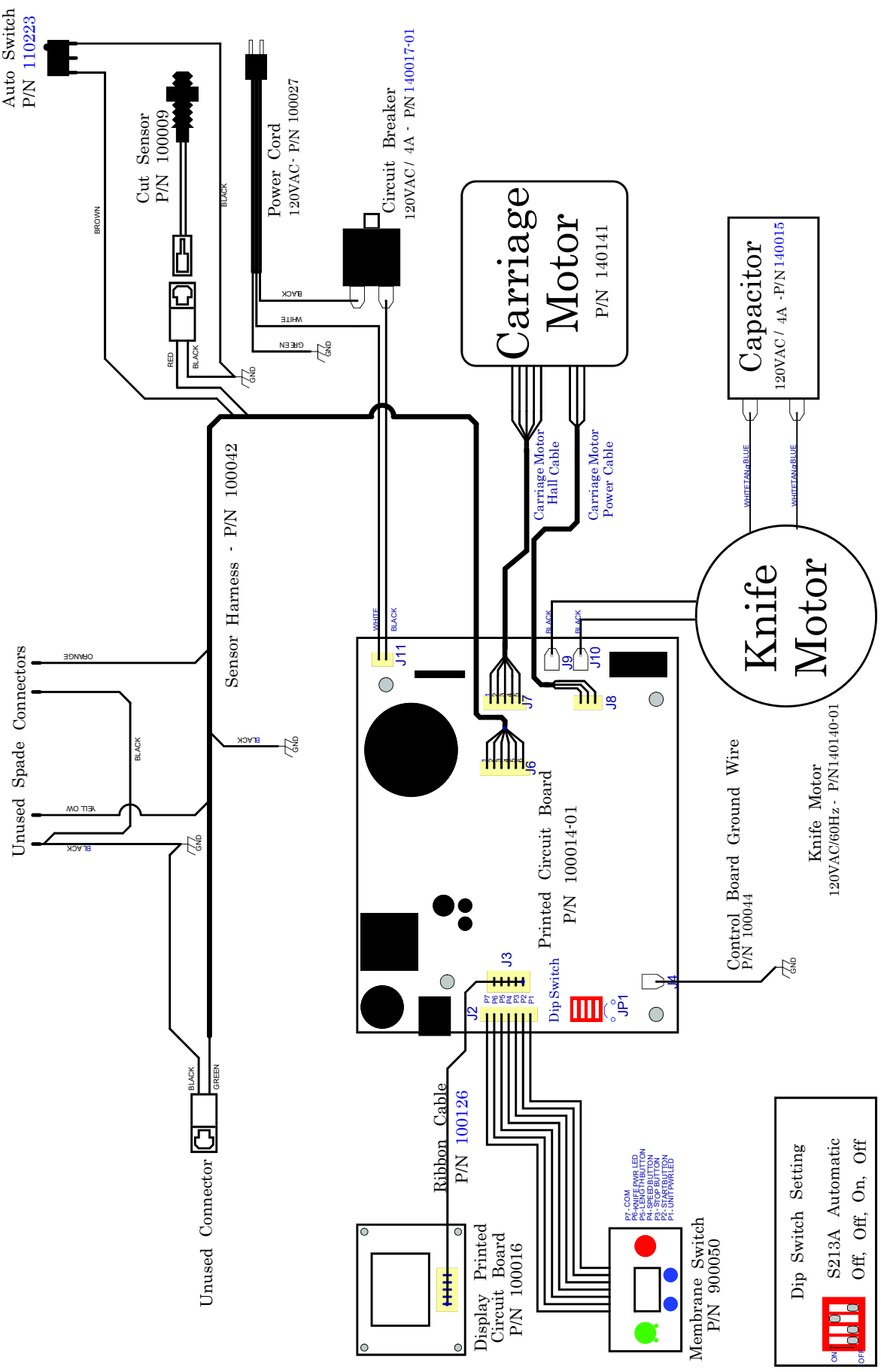




© Globe Food Equipment Company