INSTRUCTIONS

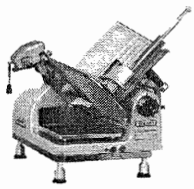

1812RS SLICER

MODEL 1812RS SLICER . . . with Retail Scale

MODEL

1812RS ML-104590

HOBART CORPORATION

701 S. RIDGE AVENUE
TROY, OHIO 45374-0001

FORM 19381 Rev. A (2-98)

Installation, Operation, and Care of Model 1812RS Slicer with Retail Scale

SAVE THESE INSTRUCTIONS

GENERAL

The 1812RS Slicer with Retail Scale is designed for connection to a Hobart SP80 / SP1500 / SP21500 System Printer. The model 1812RS slicers are equipped with Hobart designed motors and feature the exclusive Hobart Stay-Sharp cast solid stainless steel knife. Model 1812RS is available for single-phase electrical service and is furnished with a cord and plug as standard equipment. Other features and options include:

The **Power Interrupt** feature is standard: It requires the slicer to be manually re-started after a power interruption.

The **Gauge Plate Interlock** feature is standard: It prevents the Carriage Tray from being removed unless the Carriage is in the HOME position (pulled towards the operator to the limit of its travel) and the Gauge Plate is CLOSED. When the Carriage Tray is removed, the slicer will turn itself OFF if it has not previously been turned OFF. Once the Carriage Tray is removed, the slicer cannot be started until the Carriage Tray is returned to its normal position. With the Carriage Tray removed, the slicer cannot be turned on and the gauge plate cannot be opened.

The **HomeStart** feature is standard: It requires the carriage to be in the HOME position before the slicer can be started.

The **AutoShutoff** option turns the slicer OFF if a full stroke of the carriage has not been made within a brief time interval. AutoShutoff option is factory installed only.

Additional carriage fences which can be positioned to limit movement of the product during slicing are available as accessory options.

The model 1812RS Slicer (Fig. 1) is equipped with legs to allow easy cleaning underneath.

Model SP21500 System Printer and 1812RS Slicer with Retail Scale

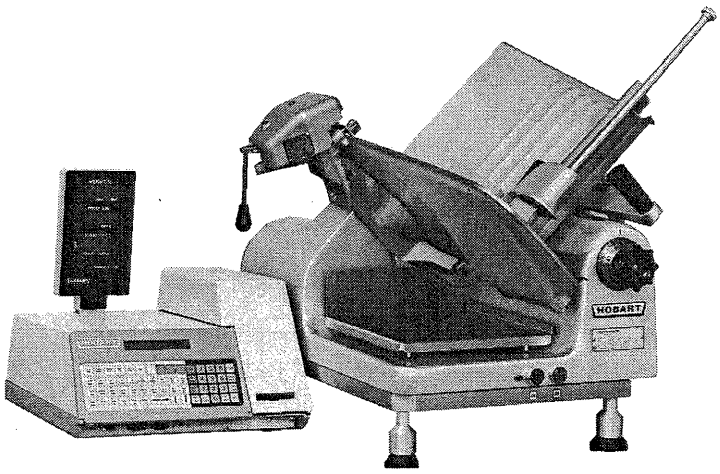

Fig. 1

© HOBART CORPORATION, 1995

INSTALLATION

UNPACKING

Immediately after unpacking the slicer, check for possible shipping damage. If the slicer is found to be damaged, save the packaging material and contact the carrier within 15 days of delivery.

Prior to installing the slicer, test the electrical service to assure it agrees with the specifications on the machine data plate which is located on the front of the slicer.

ASSEMBLY

Locate the lubricant shipped with the slicer. Put the lubricant in a safe place so it is available for machine lubrication. Refer to LUBRICATION, page 8.

Remove the Carriage Tray from its shipping location, place it in position on the slicer (Fig. 2). Secure the Carriage Tray to the slicer by lowering the Carriage Tray Lever Arm and tightening the Carriage Tray Locking Knob. Remove Scale Platform and Platter from shipping box and assemble per instructions on page 5. The top mounted Sharpener should already be in its normal position (Fig. 3).

A cable and connector from the slicer / scale connects to a connector on the peripheral printer unit. Conversion kits are available to adapt the *SP* system printer to use with the Model 1812RS Slicer/ Scale. The conversion kits should only be installed by Hobart trained service technicians, which should be done during calibration and sealing of the scale.

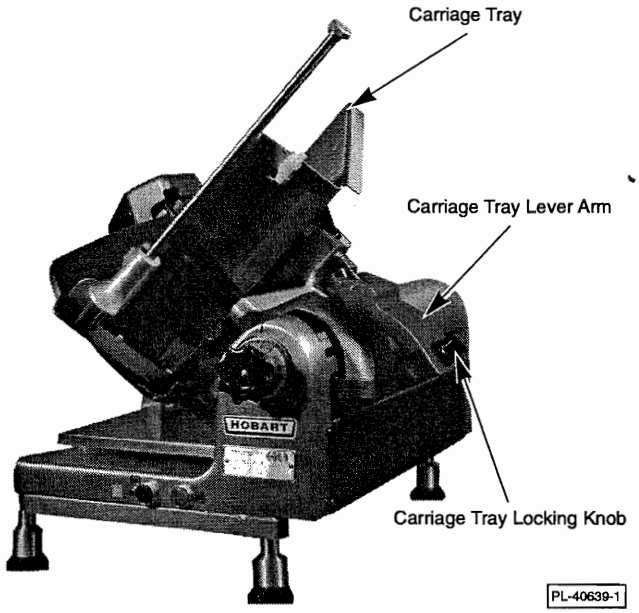

Fig. 2

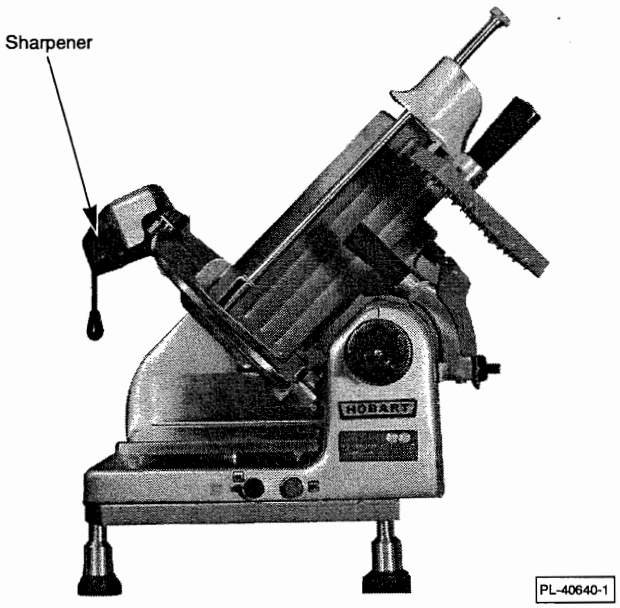

Fig. 3

ELECTRICAL CONNECTION

WARNING: THIS MACHINE IS PROVIDED WITH A THREE-PRONG GROUNDING PLUG. THE OUTLET TO WHICH THIS PLUG IS CONNECTED MUST BE PROPERLY GROUNDED. IF THE RECEPTACLE IS NOT THE PROPER GROUNDING TYPE, CONTACT AN ELECTRICIAN.

CLEAN BEFORE USING

The 1812RS Slicer must be thoroughly cleaned and sanitized after installation and before being used. Refer to CLEANING, page 5.

OPERATION

SAFETY

SAFETY DEVICES INCORPORATED IN THIS SLICER MUST BE IN THEIR CORRECT OPERATING POSITIONS ANYTIME THE SLICER IS IN USE.

The TOP KNIFE COVER must be in position and secured with the LATCH KNOB (Fig. 4). The RING GUARD is not removable. The DEFLECTOR (Fig. 5) is mounted behind the slicer knife on a spring clip. The TOP KNIFE COVER and the DEFLECTOR can be removed for cleaning.

The MEAT GRIP must be used when slicing short ends to keep your hand(s) away from the knife.

When the slicer is not running, the INDEX KNOB (Fig. 4) must be turned back below zero (fully clockwise). The GAUGE PLATE will then cover the knife edge.

Always UNPLUG the POWER CORD before cleaning or moving the Slicer.

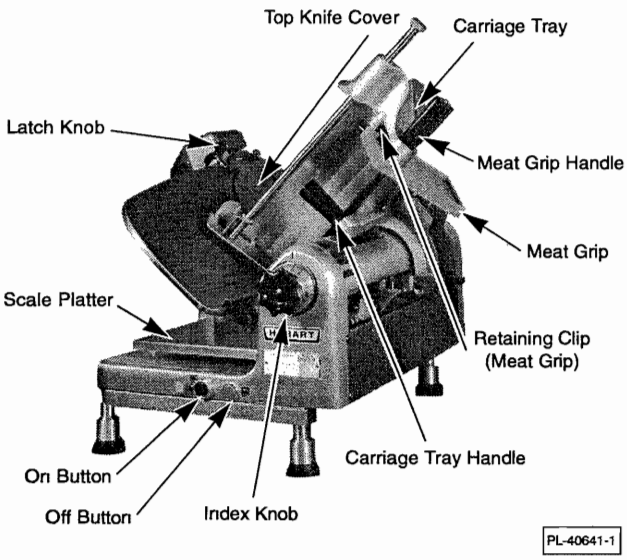

Fig. 4

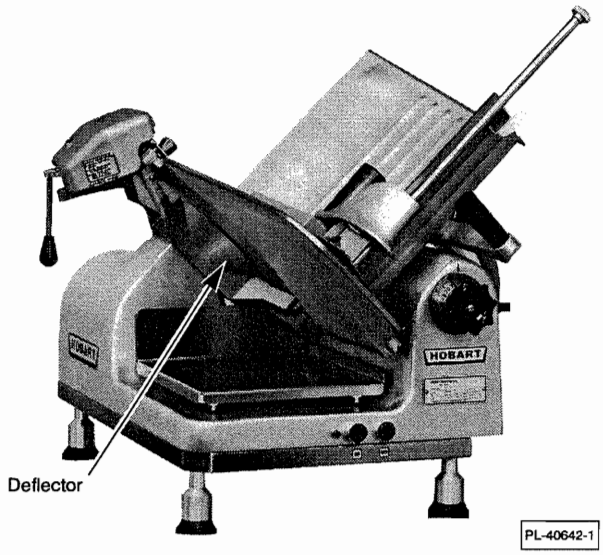

Fig. 5

WARNING: ROTATING KNIFE. USE FEED GRIP. UNPLUG BEFORE CLEANING, SERVICING, OR REMOVING PARTS. REPLACE PARTS BEFORE USE.

SLICING — MODEL 1812RS

Pull the Carriage all the way toward you until it reaches its stop. With the Meat Grip out of the way, place the product to be sliced on the Carriage Tray. Set the Meat Grip against the product. The ON button (Fig. 4) turns the slicer on. The OFF button turns the slicer off.

If the Meat Grip is not needed, it may be stored out of the way by sliding it to the top of its travel, rotating it under the Carriage Tray, and allowing it to rest in the Retaining Clip (Fig. 4).

Adjust the gauge plate to obtain the desired slice thickness by turning the Index Knob (Fig. 4). The numbers on the Index Knob do not indicate actual measurements but may be used for reference to duplicate slice thickness.

Use the Carriage Tray Handle (Fig. 4) to push the Carriage back and forth to slice.

USING THE RETAIL SCALE

Sliced product falls directly on the Scale Platter (Fig. 4). Capacity is 6.06 pounds by .01 lb increments. Scale/Printer functions are described in the SP1500 Scale Printer *OPERATOR* and *SUPERVISOR* manuals which come with the peripheral printer.

SCALE PLATFORM AND PLATTER ASSEMBLY

Proper assembly of the nylon scale platform and stainless steel scale platter is necessary before weighing. The pedestal of the nylon scale platform fits in the hole in the slicer base: The pin on the pedestal goes to the rear. Level the scale platform so the bubble appears in the middle of the circle by turning the slicer legs in or out. Place the stainless steel platter on the nylon scale platform so the backsplash goes to the rear and the two pins on the bottom fit the holes in the nylon scale platform.

CLEANING

This machine MUST be thoroughly cleaned and sanitized after each day's operation or anytime it is not to be used for an extended period of time.

WARNING: THE SLICER KNIFE IS VERY SHARP. EXERCISE EXTREME CAUTION WHEN WORKING NEAR THE KNIFE.

WARNING: UNPLUG MACHINE POWER CORD AND TURN THE INDEX KNOB FULLY CLOCKWISE BEFORE CLEANING THE SLICER.

Using a mild detergent and hot water solution and a clean cloth, wipe all surfaces of the machine. Rinse using another clean cloth and fresh water. Use only products formulated to be safe on stainless steel or aluminum.

Remove the Top Knife Cover by rotating the Latch Knob (Fig. 6). Remove the Deflector (Fig. 5) from the knife support. Wash and rinse both sides of the Top Knife Cover and Deflector.

Clean the Ring Guard by inserting a thin cloth soaked in a mild detergent and hot water solution. Insert cloth between the Ring Guard and the Knife. Place right hand above and left hand below the gauge plate. While holding the cloth with both hands, work it between the Knife and Ring Guard. Pull the cloth completely around the Ring Guard (Fig. 7). Repeat this procedure if needed.

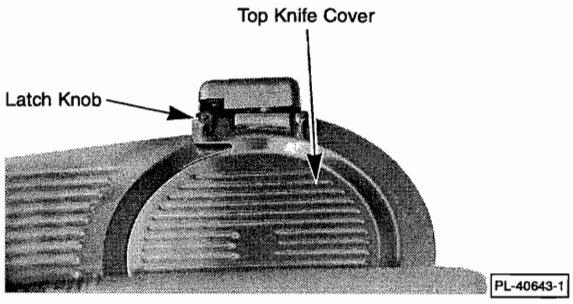

Fig. 6

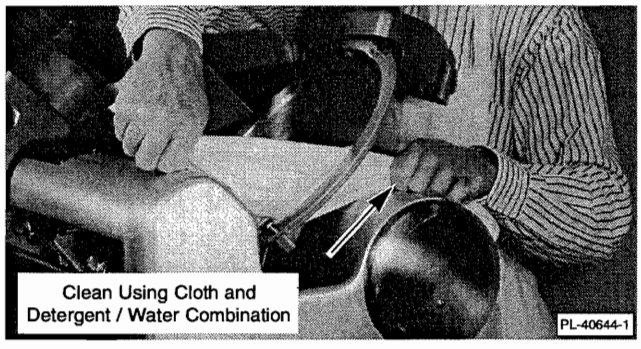

Fig. 7

CAREFULLY wash and rinse both sides of the knife by wiping outward from the center. Never use steel pads to clean the knife.

Do not exceed chemical manufacturer's recommended concentrations for detergent or sanitizer. Do not exceed 200 parts per million concentration of available chlorine. For example, mixing 1 tablespoon of 5.25% sodium hypochlorite bleach with 1 gallon of water yields a solution containing 200 ppm of available chlorine. Solution with concentrations greater than 200 ppm will accelerate corrosion of metals. Maximum exposure to sanitizing solution varies with temperature and concentration. Rinse with clean water.

Remove the sharpener by pushing the Lock Lever to the left and lifting sharpener up off of its bracket. Clean the sharpener using mild detergent and hot water solution and a clean cloth. Wipe out any product residue. Rinse with clean water.

Reassemble sharpener: With Lock lever to the left (unlocked), place sharpener over guide pins (Figs. 8, 9) so the rear slot on the sharpener slides over the rear guide pin. Press down to engage sharpener over front guide pin. Slide Lock Lever to the right to lock. Make sure the sharpener is tightly engaged. Carefully re-assemble the Top Knife Cover and Deflector. The Ring Guard is not removable.

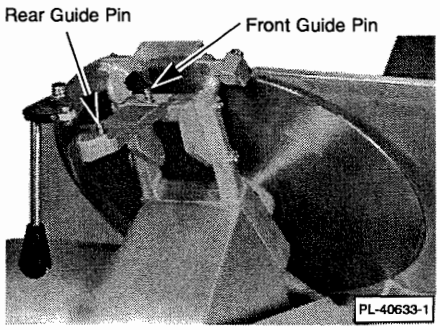

Fig. 8

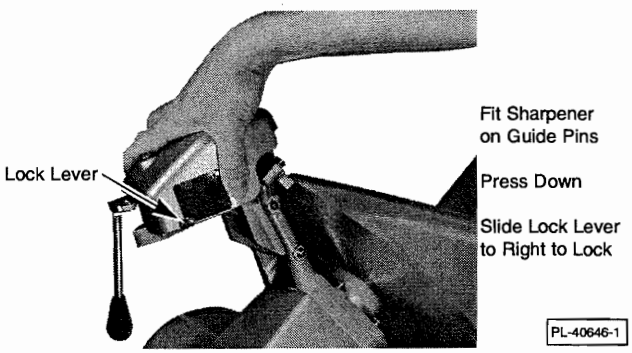

Fig. 9

The scale platter (stainless steel) and the scale platform (nylon) may be removed (Fig. 10) and washed in a dishwasher.

If using a chlorinated sanitizing solution, dilute per manufacturer's guidelines to prevent discoloration of the base. **NOTE**: Failure to follow use, care, and maintenance instructions may void your Hobart warranty.

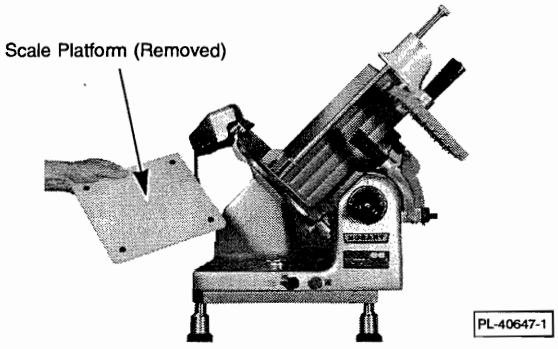

Fig. 10

MAINTENANCE

KNIFE SHARPENING

The Hobart cast stainless steel knife will provide long service in normal food retail or commercial kitchen use. However, in high volume applications where it is a practice to sharpen the knife frequently or even daily, the knife will be expended in a shorter time.

Sharpen only when necessary; prolonged or too frequent sharpening results in unnecessary knife wear.

WARNING: UNPLUG MACHINE POWER CORD.

Turn the index knob fully clockwise. Remove the Top Knife Cover by rotating the Latch Knob (Fig. 6).

Thoroughly wash the area around the knife, the exposed knife surfaces and the knife edge. Grease should not be allowed to transfer from the knife to the sharpening stones.

Plug in machine power cord and push the On button to start the slicer.

With left hand, lift sharpener handle to a horizontal position (Fig. 11).

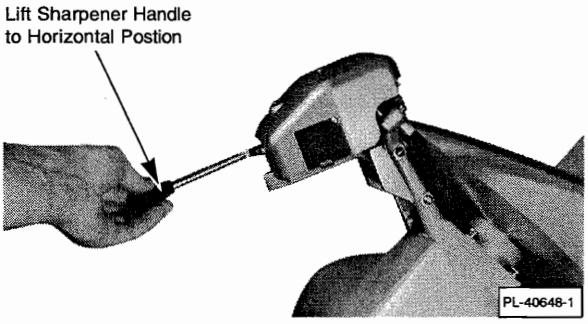

Fig. 11

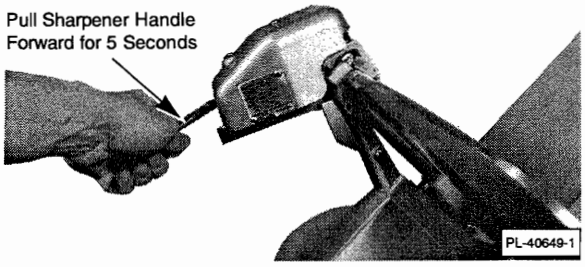

Fig. 12

Pull sharpener handle toward you, applying pressure until the handle has gone as far as it will go (Fig. 12). Sharpen knife for 5 seconds. Release sharpener handle. If necessary, repeat sharpening for another 5 seconds.

Push the Off button. Unplug machine power cord.

Wipe the slicer with a clean damp cloth to remove any grinding particles.

Replace the Top Knife Cover; rotate the Latch Knob to secure cover (Fig. 6).

NOTE: Sharpening stones are expendable and not covered under warranty.

LUBRICATION

WARNING: UNPLUG MACHINE POWER CORD.

The carriage Slide Rod Reservoir (Fig. 13) should be filled monthly with several drops of Lubriplate FM0-200-AW lubricant which was supplied with the slicer. DO NOT use vegetable oil.

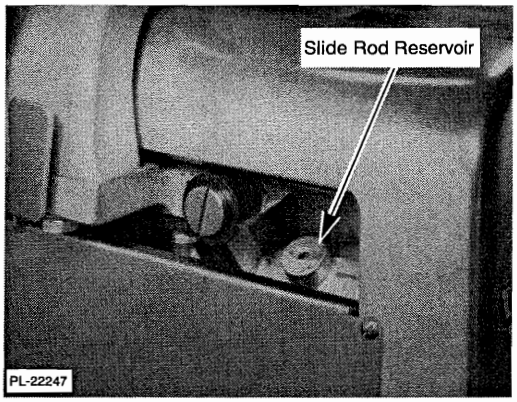

Fig. 13

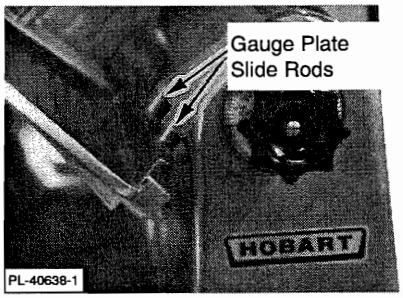

Fig. 14

Occasionally, the gauge plate slide rods (Fig. 14) should be lightly coated with the same lubricant. Turn the index knob fully counterclockwise when lubricating these slide rods, and then turn it fully clockwise when finished. Wipe off excess lubricant.

DO NOT lubricate the meat grip slide rod. It must be kept clean but not lubricated.

Additional lubricant is available from your local Hobart Service Office.

The motor has sealed bearings and requires no lubrication maintenance.

WEAR ADJUSTMENT

After several years of operation and many sharpenings of the knife, it may become necessary to have the gauge plate adjusted closer to the knife. Contact your local Hobart Service Office if this service becomes necessary as it must be done by an authorized Hobart Service Technician.