CATALOGUE OF REPLACEMENT PARTS WITH INSTRUCTIONS FOR OPERATION AND CARE OF:~

Model 212 Chopper and Model 2712 Combination

THE HOBART MANUFACTURING CO.
TROY, OHIO, U. S. A.

- THIS PAGE INTENTIONALLY LEFT BLANK -

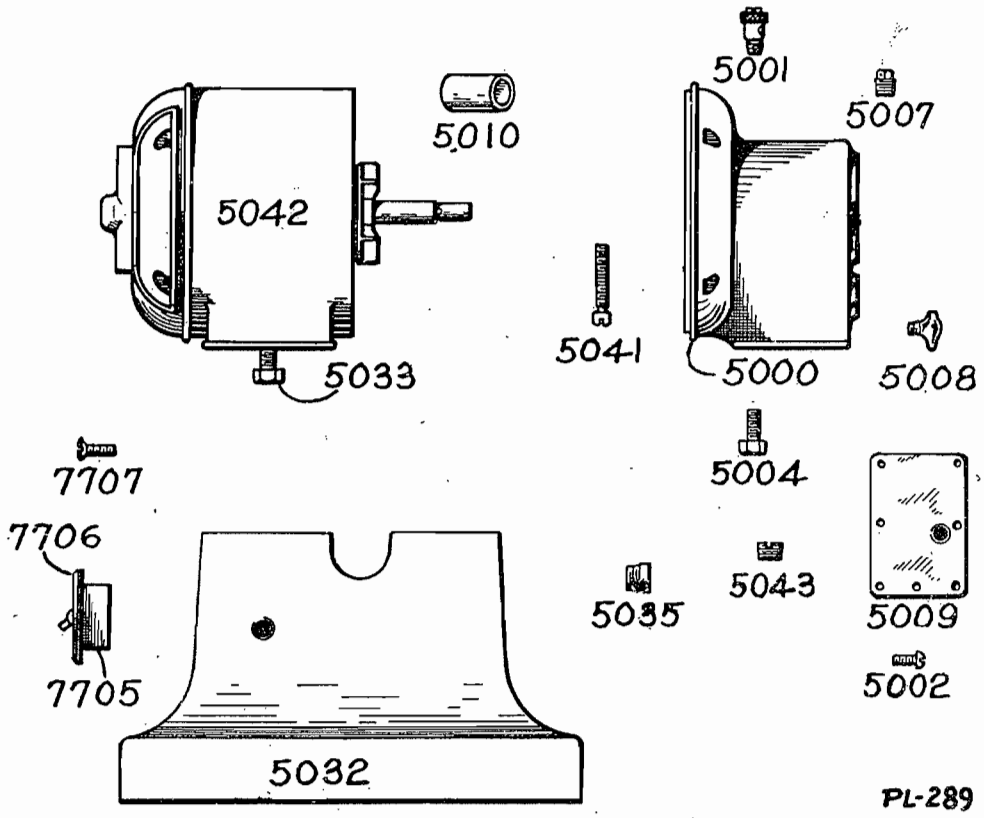

Parts for 112 and 212 Choppers

BASE UNIT

Cat No.	Description	No. req. per mach.	Fac. No.	Code Word
5000	Gear case and bearing bracket	1	S-7850-1	Anhux
5001	Oiler	1	S-7850-2	Anhvg
5002	Screw for door No. 8 x 5/8"	7	S-7850-3	Anhxa
5004	Screw 3/8" x 1"	2	S-7850-5	Aniar
5007	Ventilating pipe plug	1	V-4133-1	Anfdu
5008	Oil overflow	1	V-4037-1	Aniev
5009	Door for gear case	1	M-6653-1	Anifw
5010	Main bearing, gear case end	1	V-3545-1	Anigx
5032	Counterbase	1	P-6854-1	Anjim
5033	Motor bolt, 7/16" x 1"	2	P-6854-2	Anjko
5035	Insulating bushing in base	1	V-4869-1	Anjpt
5041	Set screw 1/4" x 1 1/4"	1	V-7712-1	Ankas
5042	Motor complete. Give current specifications. A separate part list is provided for each class of motor. Find the class number of your motor on the name plate.	1	———	Ankcu
5043	Inspection plug for door	1	V-7711-1	Ankdv
7705	Flush, tumbler switch complete	1	P-6854-5	Atykd
7706	Switch plate	1	———	Atyle
7707	Screw for switch No. 8 x 3/4"	2	P-6854-3	Atymf

Give serial number of machine.

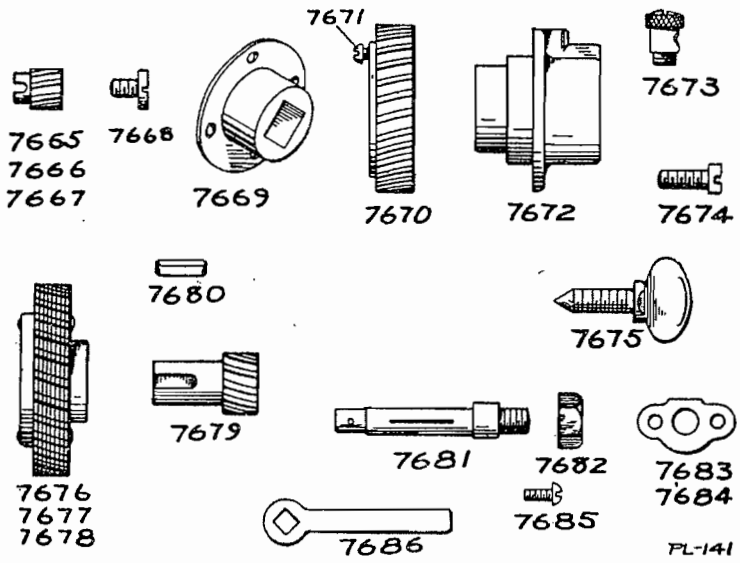

Parts for No. 12 Choppers

112, 212, 1712 and 2712

Cat. No.	Description	No. req. per mach.	Fac. No.	Code Word
7665	Motor Pinion, 15 teeth	1	V-3530-1	Atwas
7666	Motor Pinion, 17 teeth	1	V-4948-1	Atwcu
7667	Motor Pinion, 20 teeth	1	V-6397-1	Atwdv
7668	Pinion Screw	1	V-5247-1	Atwew
7669	Square drive sleeve and disc	1	V-3528	Atwgy
7670	Chopper drive gear	1	M-3526-1	Atwia
7671	Screw for attaching drive sleeve, No. 8 x ⅜"	4	M-3526-2	Atwme
7672	Attachment hub	1	P-4336-1	Atwog
7673	Oiler in attachment hub	1	P-4336-3	Atwph
7674	Attachment hub screw, ¼" x ½"	3	S-7850-4	Atwqi
7675	Thumb screw	1	M-4202-1	Atwsk
7676	Countershaft gear, 75 teeth	1	M-6649-1	Atwtl
7677	Countershaft gear, 73 teeth	1	M-6648-1	Atwum
7678	Countershaft gear, 70 teeth	1	M-6650-1	Atwwo
7679	Countershaft pinion	1	M-4722-1	Atwyq
7680	Key for countershaft pinion	1	M-4722-2	Atwzr
7681	Countershaft	1	M-3797-1	Atxaf
7682	Countershaft nut, ½" L. H.	1	M-3797-2	Atxch
7683	Countershaft end cover	1	V-3798-1	Atxdi
7684	Countershaft end cover gasket	1	V-6513-1	Atxej
7685	Countershaft end cover screw, No. 8 x 5/16"	2	S-7850-6	Atxgl
7686	Wrench for ⅛" Pipe Plug	1	V-4595-1	Atxin
7687	Pinion pin retaining washer (not shown)		V-7194-1	Atxjo

Give serial number of machine.

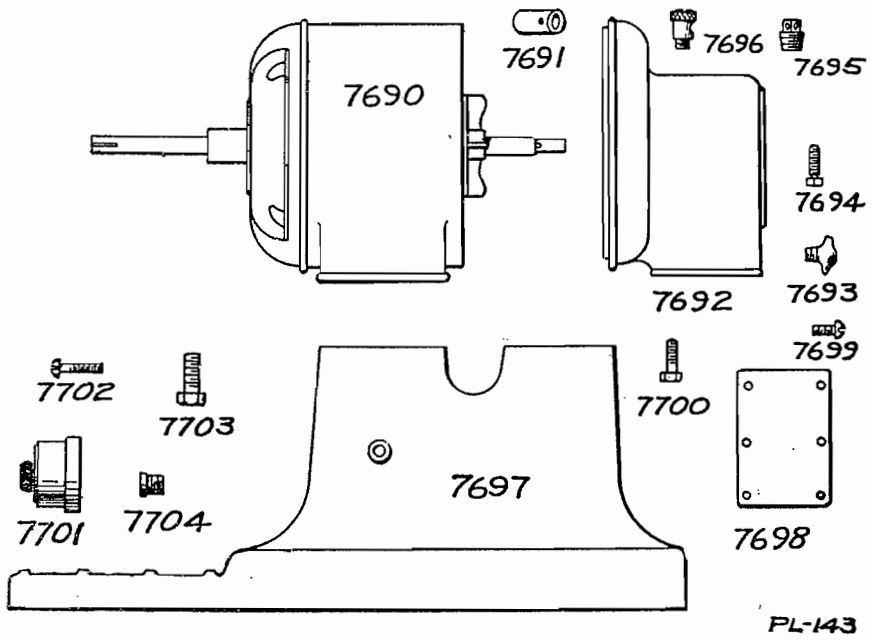

Parts for Nos. 1712 and 2712 Combination Mill and Chopper

BASE UNIT

Cat. No.	Description	No. req. per mach.	Fac. No.	Code Word
7690	Motor complete. Give current specifications. A separate list is provided for each class of motor. Find the class number of your motor on the name plate.	1	———	Atxty
7691	Main bearing, gear case end	1	V-3545-1	Atxuz
7692	Gear case	1	S-7850-1	Atxva
7693	Oil overflow	1	V-4037-1	Atxyd
7694	Set screw, ¼" x 1¼"	1	V-7712-1	Atxze
7695	Ventilating plug	1	V-4133-1	Atyat
7696	Oiler	1	S-7850-2	Atybu
7697	Counter base	1	R-6793-1	Atycv
7698	Gear case door	1	M-6653-1	Atydw
7699	Screw for gear case door	7	S-7850-3	Atyex
7700	Screw for gear case, ⅜" x 1"	2	S-7850-5	Atyfy
7701	Snap switch (Discontinued)	1	P-4280-5	Atygz
7702	Screw for snap switch, No. 6 x ⅞"	2	P-4280-3	Atyha
7703	Motor screw, 7/16" x 1"	2	R-6793-2	Atyib
7704	Insulating bushing in base	1	V-4869-1	Atyjc
7705	Flush tumbler switch, not shown	1	P-6854-5	Atykd
7706	Switch plate, not shown	1	———	Atyle
7707	Screw for switch, No. 8 x ¾"	2	R-6793-3	Atymf
5043	Inspection plug in door (not shown)	1	V-7711-1	Ankdv

Give serial number of machine.

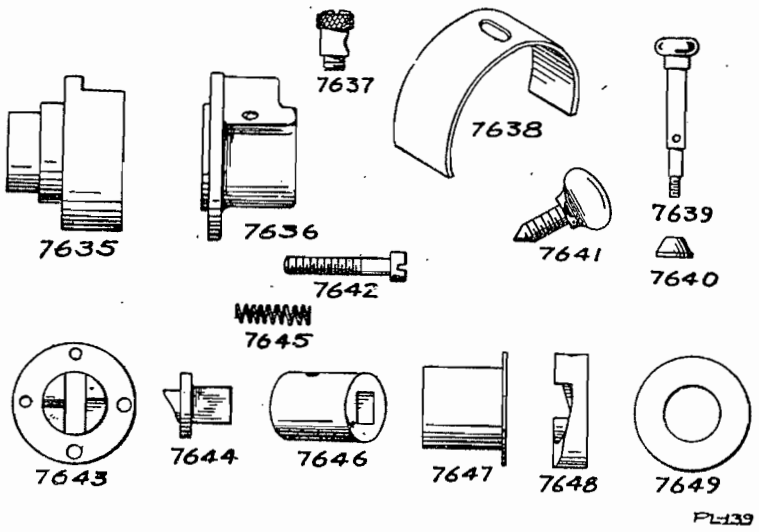

Parts for Clutch Hub for Nos. 2712 and 1712 Mill and Chopper

Cat. No.	Description	No. req. per mach.	Fac. No.	Code Word
7635	Inner End of hub	1	P-6289-1	Atuiz
7636	Outer End of hub	1	P-6288-1	Atuja
7637	Oiler	1	P-6288-2	Atukb
7638	Cover shield	1	M-6298-1	Atulc
7639	Shifting handle	1	V-6300	Atumd
7640	Shield on handle	1	V-6302-1	Atune
7541	Thumb screw	1	M-4202-1	Atuof
7642	Screw for attaching, ¼" x 2"	3	P-6288-4	Atupg
7643	Clutch Member, Driver	1	M-6294-1	Atuqh
7644	Clutch Member, Driven	1	M-6293-1	Aturi
7645	Spring	1	V-6297-1	Atusj
7646	Square Drive Sleeve	1	M-6292-1	Atuul
7647	Sleeve	1	V-6191-1	Atuvm
7648	Shifting Cam	1	M-6290-1	Atuwn
7649	Washer, 1⅞" x 15/16" x 1/16"	1	———	Atuxo

Give serial number of machine.

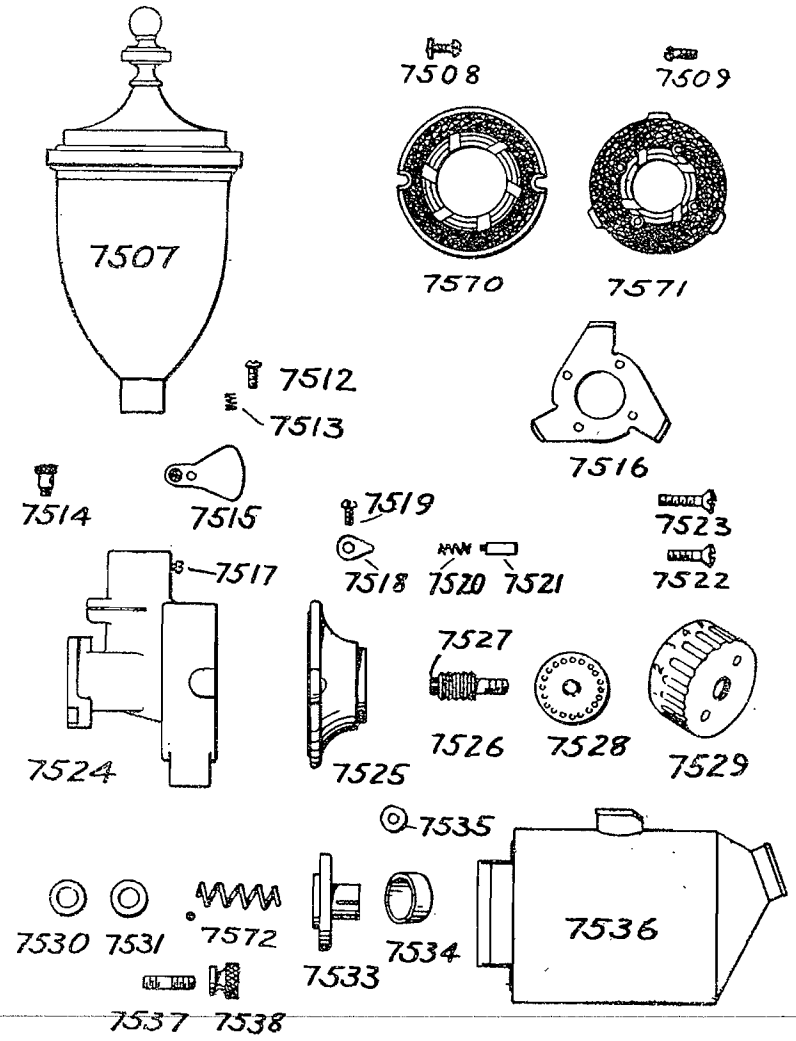

Parts for Nos. 1712 and 2712 Combination Mill and Chopper

Cat. No.	Description	No. req. per mach.	Fac. Word	Code Word
7507	Aluminum hopper complete	1	———	Atlon
7508	Stationary burr screw and nut No. 8 x 5/8"	2	———	Atlpo
7509	Rotating burr screw, 1/4 x 1/2	4	V-7623-1	Atlsr
7512	Screw for hopper cutoff, No. 8 x 5/8"	1	P-3491-3	Atlvu
7513	Spring for hopper cutoff	1	V-3356-1	Atlyx
7514	Burr Case Oiler	1	P-3491-4	Atlzy
7515	Hopper cutoff	1	V-3354-1	Atman
7516	Wiper	1	P-6024-1	Atmbo
7517	Screw to hold hopper, No. 8 x 5/16"	1	P-3491-2	Atmer
7518	Pointer	1	V-3178-1	Atmhu
7519	Screw for pointer, No. 8 x 5/16"	1	P-6029-2	Atmiv
7520	Plunger spring	1	V-3197-1	Atmly
7521	Plunger	1	V-3137-1	Atmoc
7522	Lock screw for adjusting wheel No. 10 x 3/4"	1	V-6026-2	Atmqe
7523	Lock screw for adjusting wheel No. 10 x 7/8"	1	V-6026-3	Atmsg
7524	Burr Case Back	1	P-3491-1	Atmth
7525	Burr Case Front, granulator	1	P-6029-1	Atmui
7526	Adjusting screw complete for granulator	1	M-6027-1	Atmym
7527	End thrust plug only	1	V-4604-1	Atoao
7528	Lock plate	1	M-6026-1	Atobp
7529	Adjusting wheel	1	M-6333-1	Atocq
7530	Fiber thrust washer, 7/8" Dia. 5/8" hole	1	———	Atodr
7531	Steel thrust washer 7/8" Dia. 5/8" hole	1	———	Atoes
7533	Rotating burr flange	1	M-6022-1	Atogu
7534	Retaining cap	1	V-6023-1	Atohv
7535	Release disc	1	V-6021-1	Atoiw
7536	Receiving can for 1712-2712	1	P-8333-1	Atojx
7537	Burr case stud	2	V-3804-1	Atoky
7538	Thumb nut	2	M-3745-1	Atolz
7570	Stationary, L. H. Granulating Burr	1	P-7673-1	Atqds
7571	Rotating, L. H. Granulating Burr	1	P-7676-1	Atqet
7572	Conveyor Spring, L. H.	1	V-6104-2	Atqfu
8264	Receiving Can for 27612-17512	1	R-2324-22	Avguc

Give serial number of machine.

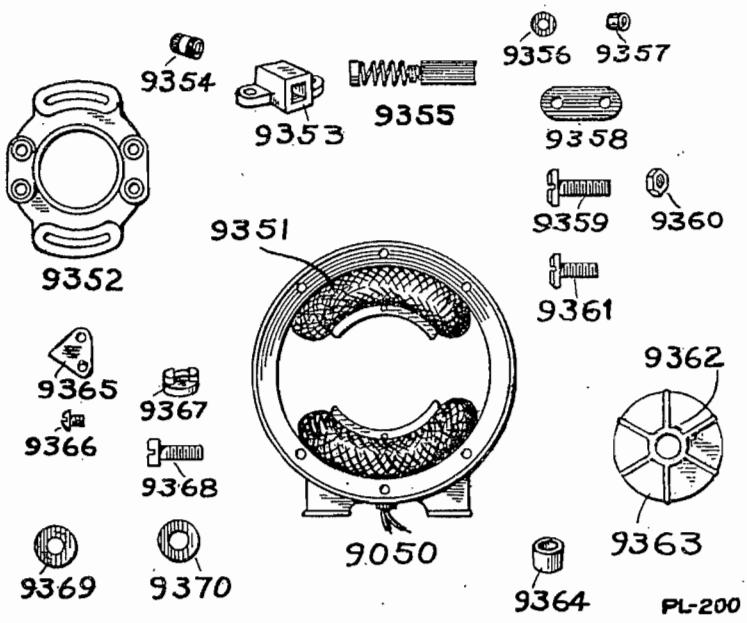

Parts for DHA-112 and DHA-1712 Motors

Cat. No.	Description	No. req. per mach.	Fac. No.	Code Word
9350	Main frame and field, wired complete (State voltage)	1	S-6895	Axwvi
9351	Field coil only (State voltage)	2	———	Axwyl
9352	Brush holder ring	1	P-6894-1	Axwzm
9353	Brush holder	2	V-6748-1	Axxab
9354	Brush retaining cap	2	V-6751-1	Axxde
9355	Brush and spring complete	2	V-6753	Axxef
9356	Insulating washer	4	V-4905-1	Axxgh
9357	Insulating bushing	4	V-6750-1	Axxhi
9358	Insulating plate	2	V-6747-1	Axxij
9359	Brush holder screw, ¼″ x ¾″	2	V-3404-2	Axxkl
9360	Nut for brush holder screw	6	V-4896-1	Axxmn
9361	Brush holder screw, ¼″ x ⅞″	2	V-6749-1	Axxno
9362	Set screw for fan	1	M-6896-2	Axxop
9363	Ventilating fan	1	M-6896-1	Axxst
9364	Insulating bushing in motor base	1	V-3100-1	Axxtu
9365	Reset pointer	1	V-6907-1	Axxuv
9366	Screw for pointer	2	R-5525-4	Axxxy
9367	Clamp nut	2	V-4891-1	Axxyz
9368	Clamp screw for brush holder ring	2	V-4891-2	Axxza
9369	Fiber spacing washer on Arm. shaft, 1/32″ thick	2	———	Axyap
9370	Fiber spacing washer on Arm. shaft, 1/16″ thick	2	———	Axybq

Give serial number of machine.

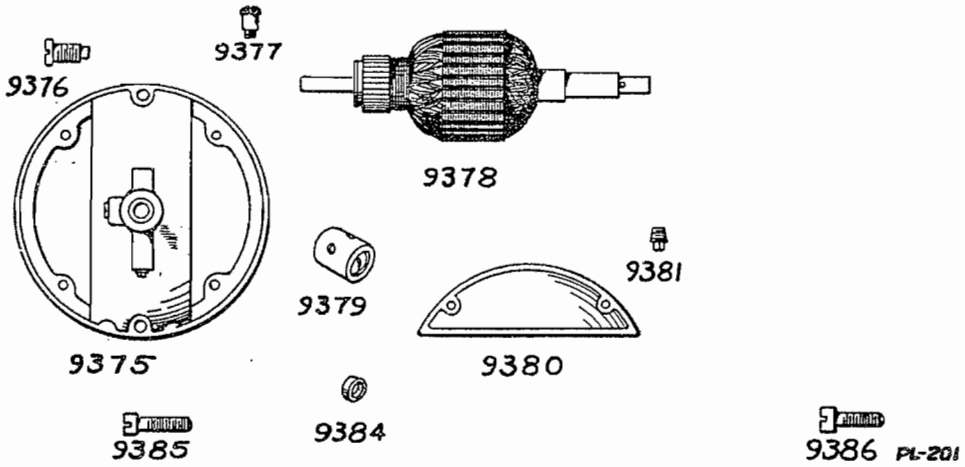

Parts for DHA-112 Motor

Cat. No.	Description	No. req. per mach.	Fac. No.	Code Word
9375	Bearing bracket, commutator end	1	R-5525-1	Axygv
9376	Bearing retaining screw	1	V-5010-1	Axyhw
9377	Oiler	1	R-5525-3	Axyix
9378	Armature complete (State voltage)	1	P-6905	Axyjy
9379	Bronze bearing, commutator end	1	M-6340-1	Axykz
9380	Inspection cover	2	P-5526-1	Axyla
9381	Oil drain plug	1	R-5525-2	Axymb
9384	Brass spacing collar on shaft	1	V-6891-1	Axype
9385	Screw for bearing brackets, ¼" x 1½"	6	V-8029-2	Asyqf
9386	Screw for bearing brackets, ¼" x 1"	4	V-8029-1	Asyrg

1016

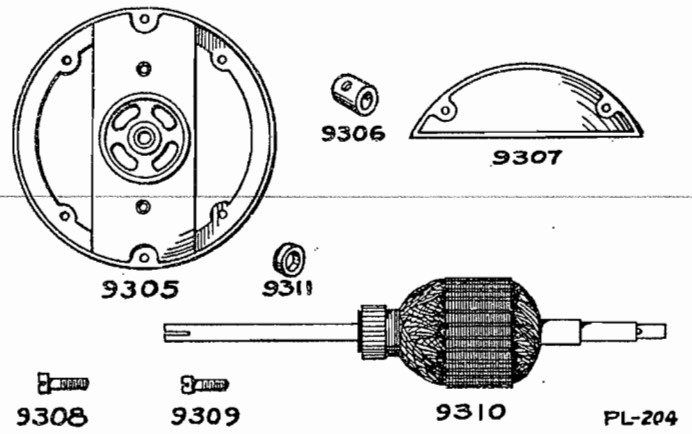

Parts for DHA-1712 Motor

Cat. No.	Description	No. req. per mach.	Fac. No.	Code Word
9305	Bearing Bracket, burr case end	1	R-6313-1	Axtji
9306	Bronze bearing, burr case end	1	V-6315-1	Axton
9307	Inspection cover	2	P-5526-1	Axtpo
9308	Bearing bracket screw, ¼" x 1½"	6	V-8029-2	Axtsr
9309	Bearing bracket screw, ¼" x 1"	4	V-8029-1	Astts
9310	Armature complete (State voltage)	1	P-6893	Axtut
9311	Brass spacing collar on shaft	1	V-6891-1	Axtvu

Give serial number of machine.

1017

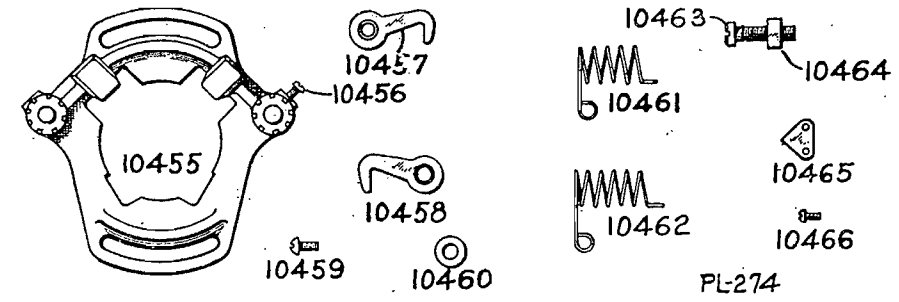

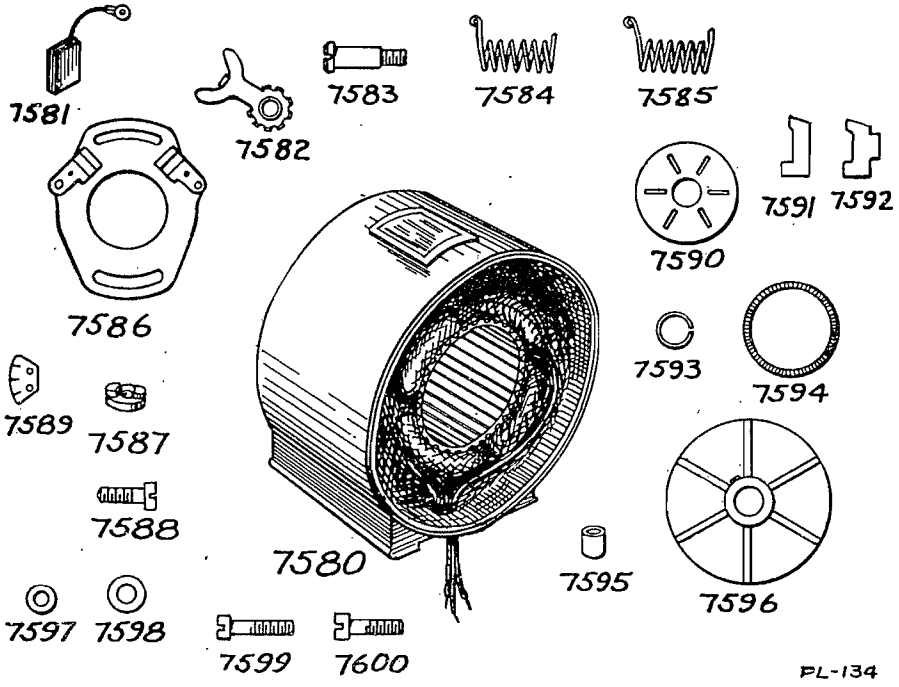

Parts for RFA-212 and RFA-2712 Motors

Cat. No.	Description	No. req. per mach.	Fac. No.	Code Word
7580	Motor Ring and stator, wired complete. Give current specifications.	1	R-5527	Atquj
7581	Carbon Brush	2	V-5603-1	Atqyn
*7582	Tension lever	2	M-6531-1	Atqzo
*7583	Pivot screw for tension lever	2	V-6532-1	Atrac
*7584	Tension spring R. H.	1	V-4898-1	Atrbd
*7585	Tension spring L. H.	1	V-4899-1	Atrce
*7586	Brush holder yoke	1	P-6529-1	Atrgi
*7587	Nut for brush holder yoke	2	V-4891-1	Atrhj
*7588	Screw for brush holder yoke—¼"x¾"	2	V-4891-2	Atrik
*7589	Reset pointer	1	V-4906-1	Atrkm
7590	Retaining plate for short circuit device	1	M-6050-1	Atrmo
7591	Segment for short circuit device	48	M-6329-1	Atroq
7592	Partition for short circuit device	6	M-6230-1	Atrpr
7593	Retaining spring for short circuit device	1	V-6052-1	Atrsu
7494	Contracting spring for short circuit device, Give Cycle	1	M-6053-1	Atrtv

* Obsolete

Cat. No.	Description	No. req. per mach.	Fac. No.	Code Word
7595	Insulating sleeve in base of motor	1	V-6651-1	Atruw
7596	Fan	1	M-5530-1	Atrwy
7597	Washer on shaft ¾" dia. x ½" hole	3	———	Atrya
7598	Washer on shaft ⅞" dia. x ⅝" hole	4	———	Atsaq
7599	Screw for bearing brackets ¼" x 1¼"	6	V-8029-2	Atsbr
7600	Screw for bearing brackets ¼" x 1"	4	V-8029-1	Atscs
10455	Brush holder ring, die cast	1	P-8417-1	Baoiq
10456	Brush terminal screw	2	P-8417-2	Baoks
10457	Brush tension arm, right hand	1	M-6738-1	Baomu
10458	Brush tension arm, left hand	1	M-6729-1	Baoow
10459	Tension arm retaining screw	2	P-8417-2	Baoqy
10460	Washer for retaining screw	2	———	Baosa
10461	Tension spring, R. H. for use with 10455	1	M-6730-1	Baouc
10462	Tension spring, L. H. for use with 10455	1	M-6731-1	Baowe
10463	Brush holder clamp screw	2	V-8501-1	Baoyg
10464	Brush holder clamp nut	2	———	Baozh
10465	Reset pointer	1	V-6907-1	Bapav
10466	Screw for pointer	2	R-5525-4	Bapbw

Give serial number of machine.

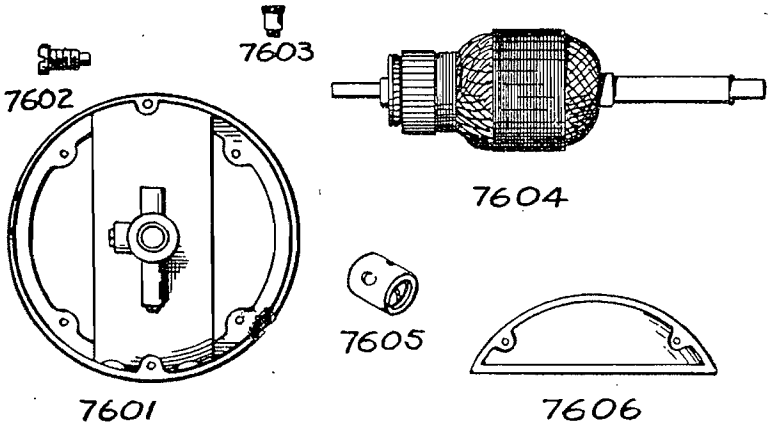

Parts for RFA-212 Motor

Cat. No.	Description	No. req. per mach.	Fac. No.	Code Word
7601	Bearing bracket, commutator end	1	R-5525-1	Atseu
7602	Bearing retaining screw	1	V-5010-1	Atsgw
7603	Oiler	1	R-5525-3	Atsiy
7604	Rotor complete. Give current specifications	1	P-6177	Atska
7605	Bronze bearing, commutator end	1	M-6340-1	Atsoe
7606	Inspection hole cover	2	M-5526-1	Atspf

1012

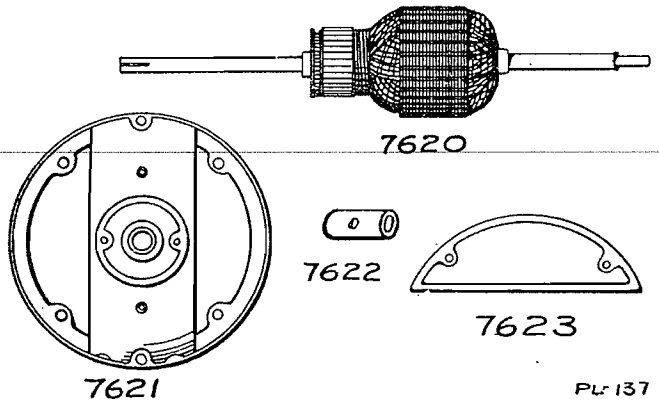

Parts for Class RFA-2712 Motor

Cat. No.	Description	No. req. per mach.	Fac. No.	Code Word
7620	Rotor complete. Give current specifications	1	P-6318	Attps
7621	Bearing bracket, commutator end	1	R-6313-1	Attru
7622	Bronze Bearing, commutator end	1	V-6315-1	Attsv
7623	Inspection hole cover	2	P-5526-1	Atttw

Give serial number of machine.

1013

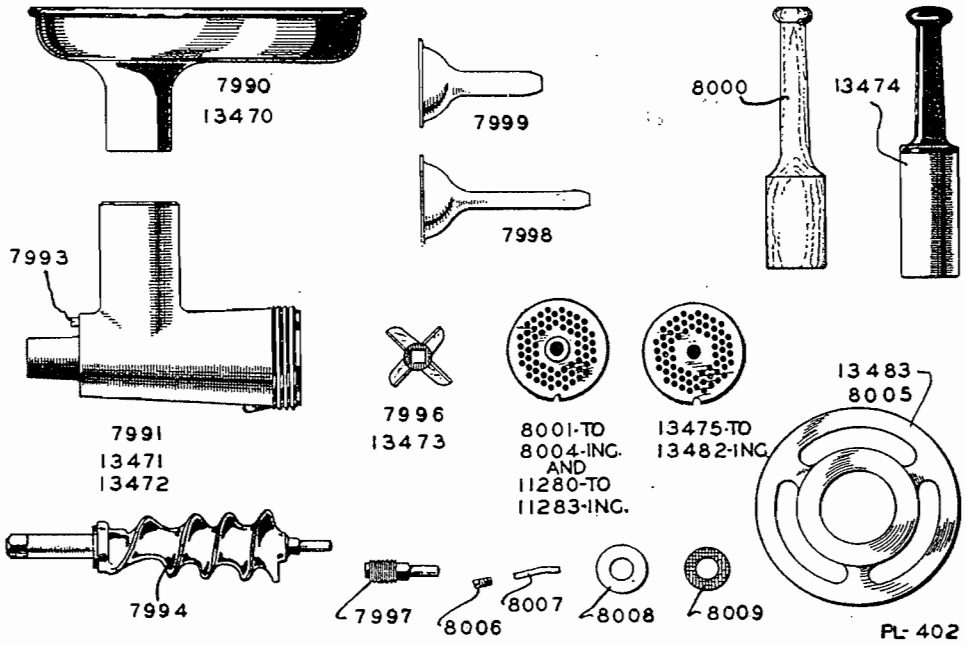

Parts for No. 12 Chopper Attachment

Protective Type

Cat. No.	Name of Part	Quantity	Factory No.	Code Word
7990	Feed pan, tinned (Also see 13470)	1	P-7456-1	Auqsf
7991	Cylinder, taper hub, straight flute, tinned (Also see 13471 and 13472)	1	R-6643	Auquh
7993	Stop stud for cylinder	1	V-5677	Auqyl
7994	Chopper worm complete, square drive	1	M-5944	Auqzm
7996	Knife, regular (Also see 13473)	1	M-7078	Aurde
7997	Plate stud in worm	1	M-5125	Auref
7998	Sausage stuffer, for sheep casing	1	P-4980	Aurgh
7999	Sausage stuffer, for pig casing	1	M-5174	Aurhi
8000	Wooden feed stick	1	M-6555	Aurij
8001	Chopper plate, 1/8" holes, regular	1	P-5800	Aurkl
8002	Chopper plate, 3/16" holes, regular	1	P-5797	Aurmn
8003	Chopper plate, 1/4" holes, regular	1	P-5799	Aurno
8004	Chopper plate, 3/8" holes, regular	1	P-5798	Aurop
8005	Adjusting wheel, tinned (Also see 13483)	1	P-6507	Aurst
8006	Retaining screw for plate pin	1	V-4310	Aurtu
8007	Plate pin	1	V-4034	Auruv
8008	Bronze thrust washer in cylinder	1	V-4838	Aurxy
8009	Fibre thrust washer for worm	1	V-3310	Auryz
11280	Chopper plate, 5/64" holes, regular	1	P-7211	Bhojk
11281	Chopper plate, 1/2" holes, regular	1	M-7212	Bhokl
11282	Chopper plate, 5/8" holes, regular	1	M-7213	Bholm
11283	Chopper plate, 3/4" holes, regular	1	M-7214	Bhomn
13470	Feed pan, stainless steel	1	P-7456-3	Byowg
13471	Cylinder, taper hub, spiral flute, tinned	1	S-14903	Byoxh
13472	Cylinder, taper hub, spiral flute, Brite Metal	1	S-14152	Byoyi
13473	Knife, Stay Sharp	1	P-13988	Byozj
13474	Metal feed stick	1	P-14423	Bypax
13475	Stay sharp plate, 5/64" holes	1	M-14980-1	Bypby
13476	Stay sharp plate, 1/8" holes	1	M-14980-2	Bypcz
13477	Stay sharp plate, 3/16" holes	1	M-14980-3	Bypda
134..	Stay sharp plate, 1/4" holes	1	M-14980-4	Bypeb
13479	Stay sharp plate, 3/8" holes	1	M-14980-5	Byphe
13480	Stay sharp plate, 1/2" holes	1	M-14980-6	Bypif
13481	Stay sharp plate, 5/8" holes	1	M-14980-7	Bypkh
13482	Stay sharp plate, 3/4" holes	1	M-14980-8	Bypli
13483	Adjusting wheel, Brite Metal	1	P-14639	Bypol