INSTRUCTIONS



2612 SLICER

MODEL 2612 & 2712 SLICERS

MODELS

2612	ML-134231
2612PHS	ML-134234
2712	ML-134235
2712PHS	ML-134238

Previous models covered by this manual:

2612	ML-104613
	ML-104829
2712	ML-104718
	ML-104822

HOBART

701 S. RIDGE AVENUE
TROY, OHIO 45374-0001

937 332-3000

www.hobartcorp.com

FORM 34453 Rev. B (JAN. 2007)

Installation, Operation, and Care of MODEL 2612 & 2712 SLICERS

SAVE THESE INSTRUCTIONS

GENERAL

The model 2612 and 2712 slicers are equipped with a ½ HP motor and are available for single-phase electrical service. The slicer features the exclusive Hobart Stay-Sharp contoured cast solid stainless steel knife. The slicer is furnished with a cord and plug as standard equipment.

The 2712 slicer features automatic slicing with two adjustable speeds.

The low carriage fence is an accessory on 2612; it is standard on 2712. A tubular food chute, 4" leg set and slaw tray are other available accessories.

The standard meat grip is front-mounted. Heavy front-mounted meat grip is an available accessory.

MODEL 2612 SLICER



MODEL 2712 SLICER



© HOBART CORPORATION, 1998

INSTALLATION

UNPACKING

Immediately after unpacking the slicer, check for possible shipping damage. If the slicer is found to be damaged, save the packaging material and contact the carrier within 15 days of delivery.

Prior to installing the slicer, test the electrical service to assure it agrees with the specifications on the machine data plate. The data plate is located on the right side of the slicer base.

CARRIAGE TRAY

The Carriage Tray is secured to the slicer when the knob on the Carriage Tray / Support Arm is turned clockwise until snug (Fig. 1). Refer to page 7 for assembly information.

SHARPENER

The Sharpener should already be mounted on top of the slicer and locked to its bracket (Fig. 1).

TOP KNIFE COVER

The Top Knife Cover should already be in place and secured with its Latch Knob (Fig. 1).

DEFLECTOR

The Deflector should already be mounted below the knife (Fig. 1).

FENCE (Low and High Fences are accessories used with front-mounted meat grip only.)

Either Fence (Fig. 1) can be clamped on the Carriage Tray to limit product movement during slicing.

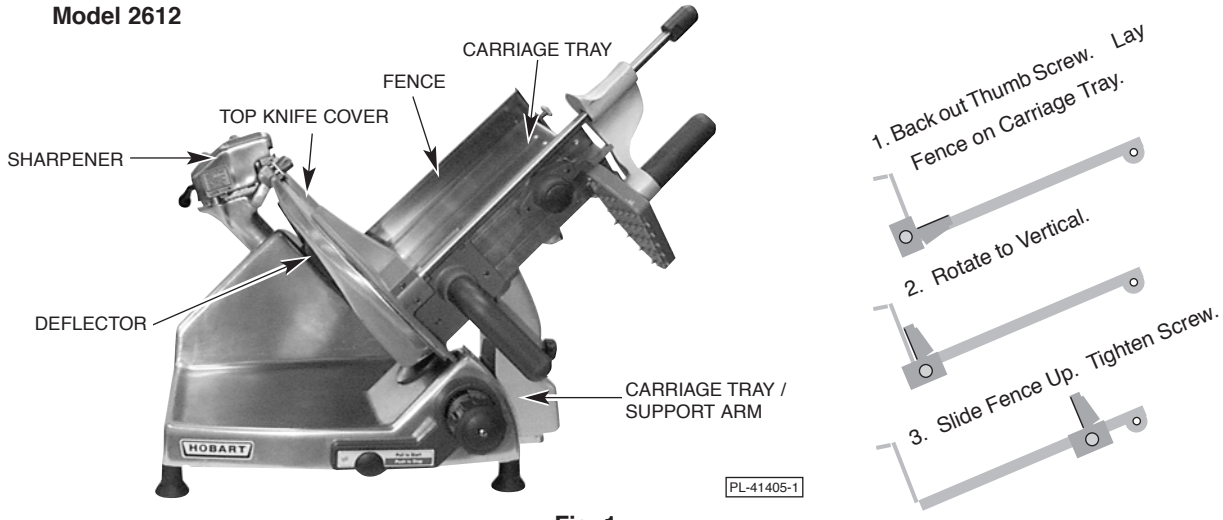

Fig. 1

ELECTRICAL

WARNING: THIS MACHINE IS PROVIDED WITH A THREE-PRONG GROUNDING PLUG. THE OUTLET TO WHICH THIS PLUG IS CONNECTED MUST BE PROPERLY GROUNDED. IF THE RECEPTACLE IS NOT THE PROPER GROUNDING TYPE, CONTACT AN ELECTRICIAN.

CLEAN BEFORE USING

The 2612 or 2712 slicer must be thoroughly cleaned and sanitized after installation and before being used. Refer to Cleaning, page 6.

OPERATION

SAFETY

SAFETY DEVICES INCORPORATED IN THIS SLICER MUST BE IN THEIR CORRECT OPERATING POSITIONS ANYTIME THE SLICER IS IN USE.

The TOP KNIFE COVER must be in position and secured with the LATCH KNOB (Fig. 2). The RING GUARD is not removable. The DEFLECTOR, mounted below the slicer knife, can be removed for cleaning.

The MEAT GRIP (Fig. 2) must be used when slicing short ends to keep your hand(s) away from the knife.

When the slicer is not running, the INDEX KNOB (Fig. 2) must be turned back below zero (fully clockwise). The GAUGE PLATE will then cover the knife edge.

Always UNPLUG the POWER CORD before cleaning or moving the Slicer.

Model 2612

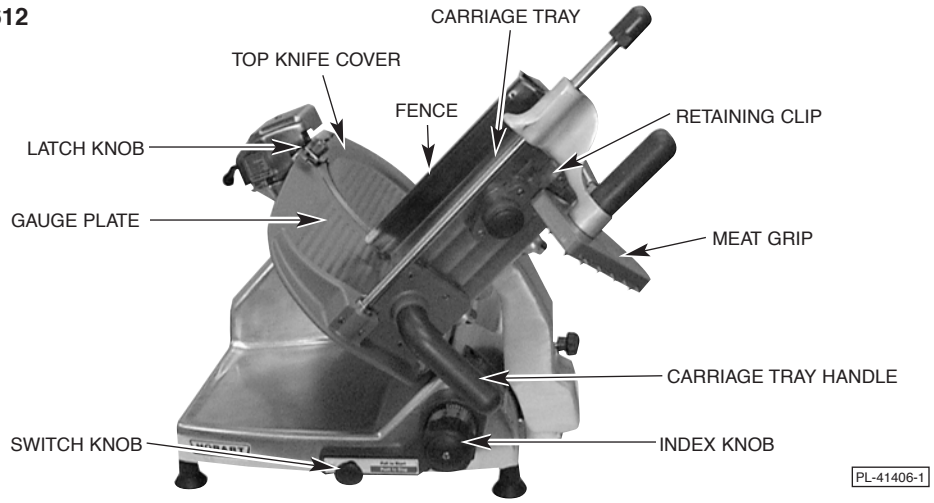

Fig. 2

WARNING: ROTATING KNIFE. USE FEED GRIP. UNPLUG MACHINE POWER CORD BEFORE CLEANING, SERVICING, OR REMOVING PARTS. REPLACE PARTS BEFORE USE.

SLICING — MODEL 2612

With the Gauge Plate fully closed, pull the Carriage all the way toward you until it reaches its stop. With the Meat Grip out of the way, place the product to be sliced on the Carriage Tray. Set the Meat Grip against the product. Turn the slicer on by pulling the Switch Knob (Fig. 2) forward until it starts and then releasing it.

If the Meat Grip is not needed, it may be stored out of the way by rotating it behind the top of the Carriage Tray where it can rest on the Retaining Clip (Fig. 2).

Adjust the gauge plate to obtain the desired slice thickness by turning the Index Knob (Fig. 2). The numbers on the Index Knob do not indicate actual measurements but may be used for reference to duplicate slice thickness.

Use the Carriage Tray Handle (Fig. 2) to push the Carriage back and forth to slice.

SLICING — MODEL 2712

With the Gauge Plate fully closed, pull the Carriage all the way toward you until it reaches its stop. With the Meat Grip out of the way, place the product to be sliced on the Carriage Tray. Adjust the fence, if equipped, by loosening the thumb screw and sliding the fence so that it is close to the product but not pushing against it. Tighten the thumb screw. Set the Meat Grip against the product. Always make sure the Lever (Fig. 3) is in the Manual position (down) before starting the slicer. Turn the slicer on by pulling the Switch Knob (Fig. 3) forward until it starts and then releasing it.

If the Meat Grip is not needed, it may be stored out of the way by sliding it to the top of its travel, rotating it under the Carriage Tray, and allowing it to rest in the Retaining Clip (Fig. 3).

Adjust the gauge plate by turning the Index Knob (Fig. 3) to obtain the desired slice thickness. The numbers on the Index Knob do not indicate actual measurements but may be used for reference to duplicate slice thickness.

Use the Carriage Tray Handle (Fig. 3) to push the Carriage back and forth to slice manually.

To operate the slicer in Automatic mode . . . Rotate the Speed Selector Knob (Fig. 3) to the desired speed; make sure the Carriage is in HOME position (all the way forward); make sure the Lever (Fig. 3) is on the Manual position (pointing down); turn the slicer on; start the carriage drive unit by rotating the Lever to the Automatic position (up and to the right).

Either of the two speed selections can be used to begin Automatic mode. The speed can be adjusted at any time by rotating the Speed Selector Knob.

To stop the drive unit, rotate the Lever down and to the left — to the Manual position.

To use the optional Food Chute, place the Meat Grip on the Retaining Clip, fit the hangers on the Food Chute around the meat grip slide rod (at front), and lower the Food Chute onto the Carriage Tray.

Model 2712

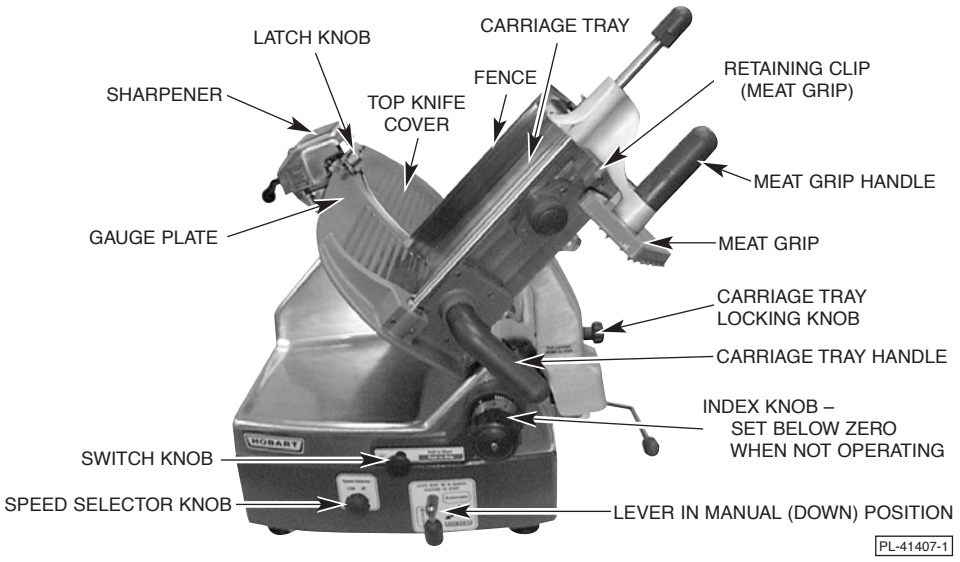

Fig. 3

CLEANING

This machine must be thoroughly cleaned and sanitized after each day's operation or after being idle for an extended period of time.

WARNING: THE SLICER KNIFE IS VERY SHARP. EXERCISE EXTREME CAUTION WHEN WORKING NEAR THE KNIFE.

WARNING: UNPLUG MACHINE POWER CORD AND TURN THE INDEX KNOB FULLY CLOCKWISE BEFORE CLEANING THE SLICER.

Use a clean cloth soaked in mild detergent and warm water to wipe all surfaces of the machine. Rinse using a fresh cloth and clean water. Use only products formulated to be safe on stainless steel or aluminum.

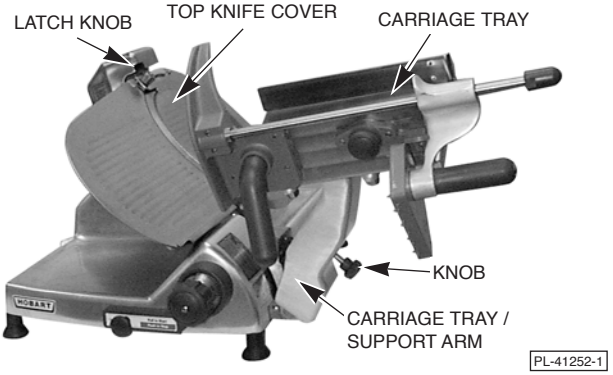

Fig. 4

To clean the Carriage Tray, close the gauge plate and pull the Carriage all the way to the front. Unscrew the Knob on the Carriage Tray / Support Arm (Fig. 4). Tilt the Carriage Tray / Support Arm to the right until almost horizontal (Fig. 4). The Carriage Tray / Support Arm can be cleaned while in this horizontal position, or it can be removed by grasping with both hands and lifting straight up. Once removed, the Carriage Tray / Support Arm can be cleaned in a sink. **NOTE**: The last three digits of the slicer serial number are etched on the Key (Fig. 8) so you can make sure the Carriage Tray stays with its own slicer.

Remove the Top Knife Cover by rotating the Latch Knob (Fig. 4) counterclockwise and lifting it free of the guide pins. Remove the Deflector (Fig. 1) from its mount below the slicer knife by rotating downward. Clean both Top Knife Cover and Deflector with warm soapy water in a sink. Rinse with clean water.

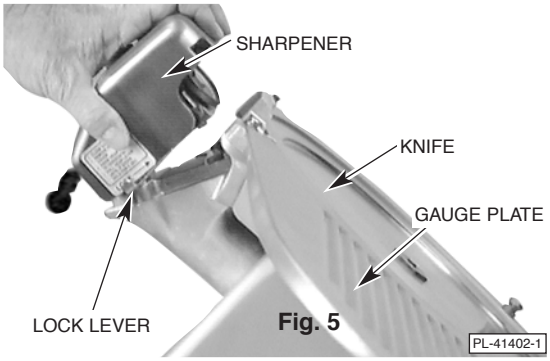

Fig. 5

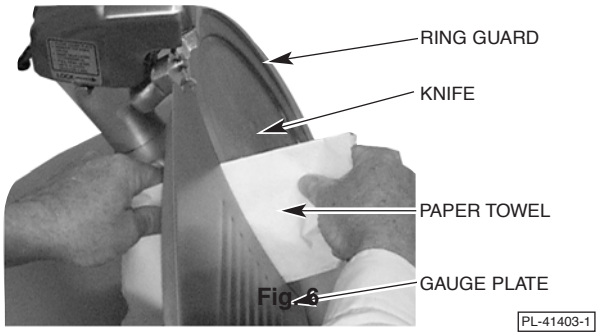

Fig. 6

Remove the sharpener by pushing the Lock Lever to the left (Fig. 5). Tilt the right side up, clearing the right guide pin, then lift the sharpener up, clearing the left guide pin. Wipe out any residue remaining inside the sharpener housing and clean the sharpener in a sink. Rinse with fresh water.

Clean completely around the Ring Guard by working a moistened, folded paper towel between the Ring Guard and Knife. Insert the towel at the base of the Ring Guard. Manually rotate the knife and the towel will wipe the Ring Guard and the edge of the Gauge Plate as it follows the knife (Fig. 6).

Wash and rinse both sides of the knife by wiping outward from the center. Use a mild detergent or sanitizer solution only. Never clean any part of the slicer with steel pads.

Do not exceed chemical manufacturer's recommended concentrations for detergent or sanitizer. Do

not exceed 200 parts per million concentration of available chlorine. For example, mixing 1 tablespoon of 5.25% sodium hypochlorite bleach with 1 gallon of water yields a solution containing 200 ppm of available chlorine. Solution with concentrations greater than 200 ppm will accelerate corrosion of metals. Maximum exposure to sanitizing solution varies with temperature and concentration. Rinse with clean water.

Reassemble the sharpener to the mounting bracket by sliding the left slot on the sharpener over the left guide pin on the bracket while tilting slightly (Fig. 7). Then, press down on the right side of the sharpener so the locking hole fits over the right guide pin on the bracket. Slide the Lock Lever to the right to lock the sharpener in position. Make sure the sharpener is securely engaged to the pins on the bracket.

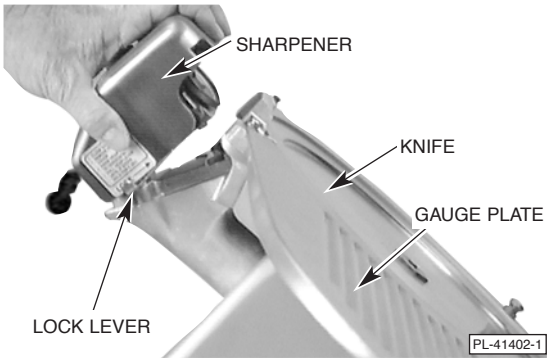

Fig. 7

Carefully reassemble the Top Knife Cover by putting it in position (three guide pins). Lock by turning the Latch Knob to the left while lowering the Top Knife Cover; then, release the Latch Knob and turn it to the right until snug.

Replace the Deflector below the slicer knife:  Guide bottom of socket onto mount and rotate upwards.

Make sure the digits etched on the Key (Fig. 8) match the last three digits of the slicer serial number. To reinstall the Carriage Tray / Support Arm: Hold it with both hands and lower it so the Key at the bottom of the Support Arm fits into the slot of the Carriage Pivot (Fig. 8). The Carriage Tray should rest almost horizontal (Fig. 4). Return the Carriage Tray to the Gauge Plate by tilting to the left. Turn the Knob on the Carriage Tray / Support Arm clockwise until snug.

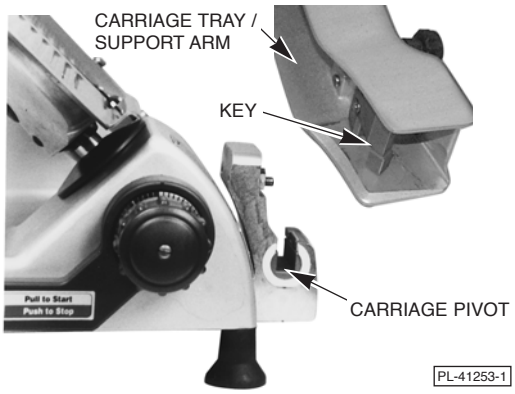

Fig. 8

The model 2612 slicer has a cleaning leg underneath the machine. To engage the cleaning leg, raise the front of the slicer by lifting the front of the slicer base. The cleaning leg will swing straight down. Pull the cleaning leg all the way to the front so the slicer is completely supported before cleaning underneath (Fig. 9).

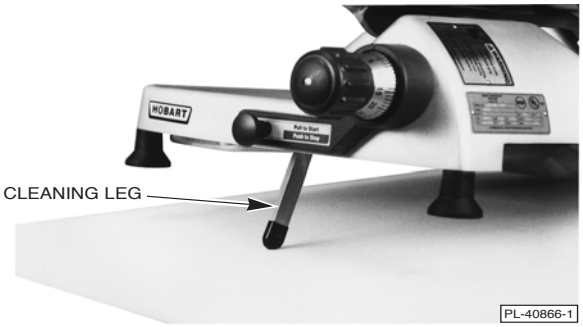

Fig. 9

To clean under the model 2712 slicer, raise the Lift Lever past center to its stop (Fig. 10). After cleaning, return the slicer to its normal position by slowly retracting the Lift Lever.

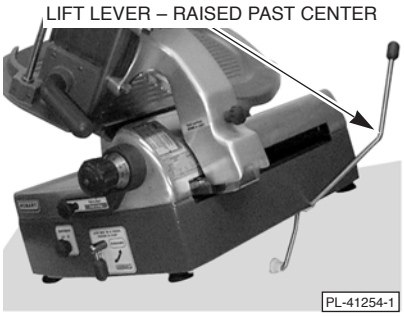

Fig. 10

DO NOT wash any slicer components in a dishwasher. DO NOT immerse slicer base or motor in water. DO NOT hose down slicer or splash excessively with water.

If using a chlorinated sanitizing solution, dilute per manufacturer's guidelines. Rinse with fresh water.

NOTE: Failure to follow use, care, and maintenance instructions may void your Hobart warranty.

MAINTENANCE

KNIFE SHARPENING

The Hobart cast stainless steel knife will provide long service in normal food retail or commercial kitchen use. However, in high volume applications where it is a practice to sharpen the knife frequently or even daily, the knife will be expended in a shorter time.

Sharpen only when necessary; prolonged or too frequent sharpening results in unnecessary knife wear.

WARNING: UNPLUG MACHINE POWER CORD.

Turn the index knob fully clockwise to close the gauge plate. Remove the Top Knife Cover by rotating the Latch Knob counterclockwise and lifting it off the slicer. Thoroughly wash the area around the knife, the exposed knife surfaces, and the knife edge. Fat from meat or cheese should not be allowed to transfer from the knife to the sharpener.

Plug in machine power cord. Start the slicer by pulling the start switch forward until it starts and then releasing it. If the sharpener handle is the type that does not hang downwards, pull it fully forward for 5 seconds (Fig.11). If the sharpener handle does hang downwards, lift it with your left hand until horizontal and pull forward for 5 seconds (Fig. 11). Slowly release the sharpener handle. If necessary, repeat sharpening for another 5 seconds.

Turn the slicer off. Unplug machine power cord. Wipe the slicer with a clean damp cloth to remove any grinding particles. Replace the Top Knife Cover.

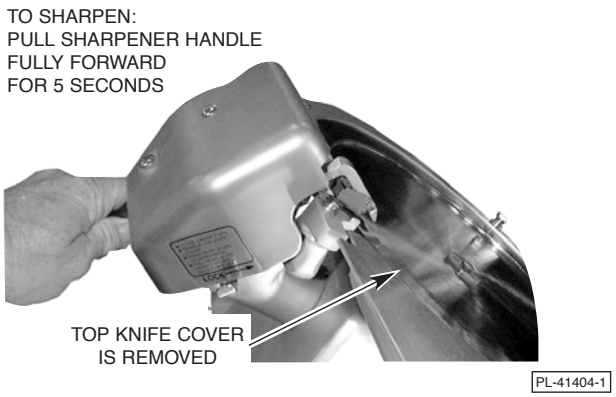

Fig. 11

LUBRICATION — Carriage Slide Rod

Lubricate the Carriage Slide Rod with Lubriplate FMO-200-AW oil (supplied). Either squirt 8 – 10 drops every 2 – 3 months (depending on usage) in the Wick Hole on the Carriage Transport (Fig.12). Or, once monthly, apply 4 – 5 drops directly on the Carriage Slide Rod on each side of the Carriage Transport (Fig.12).

To apply oil, pull out the telescoping tube on the oil bottle, aim the tube, and squeeze gently on the sides of the bottle. After applying oil, move the Carriage Tray back and forth a few times so the oil spreads over the entire length of the slide rod.

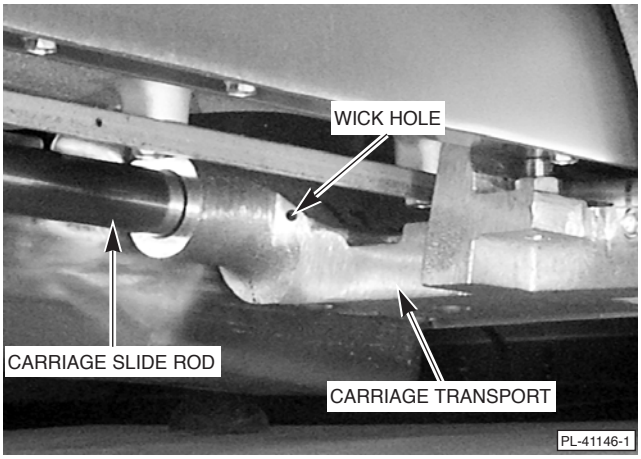

Fig. 12

OVERLOAD RESET BUTTON — MODEL 2712

Push the reset button underneath the slicer near the right-front foot if the carriage motor overloads.

SERVICE

Contact your local Hobart-authorized service office for any repairs or adjustments needed on this equipment.