HOBART

CATALOG OF REPLACEMENT PARTS



SLICERS

(INCLUDES MOTOR PARTS)

2612 **ML-104829**

A product of HOBART CORPORATION 701 S. RIDGE AVENUE TROY, OHIO 45374-0001

FORM 34176 (3-99)

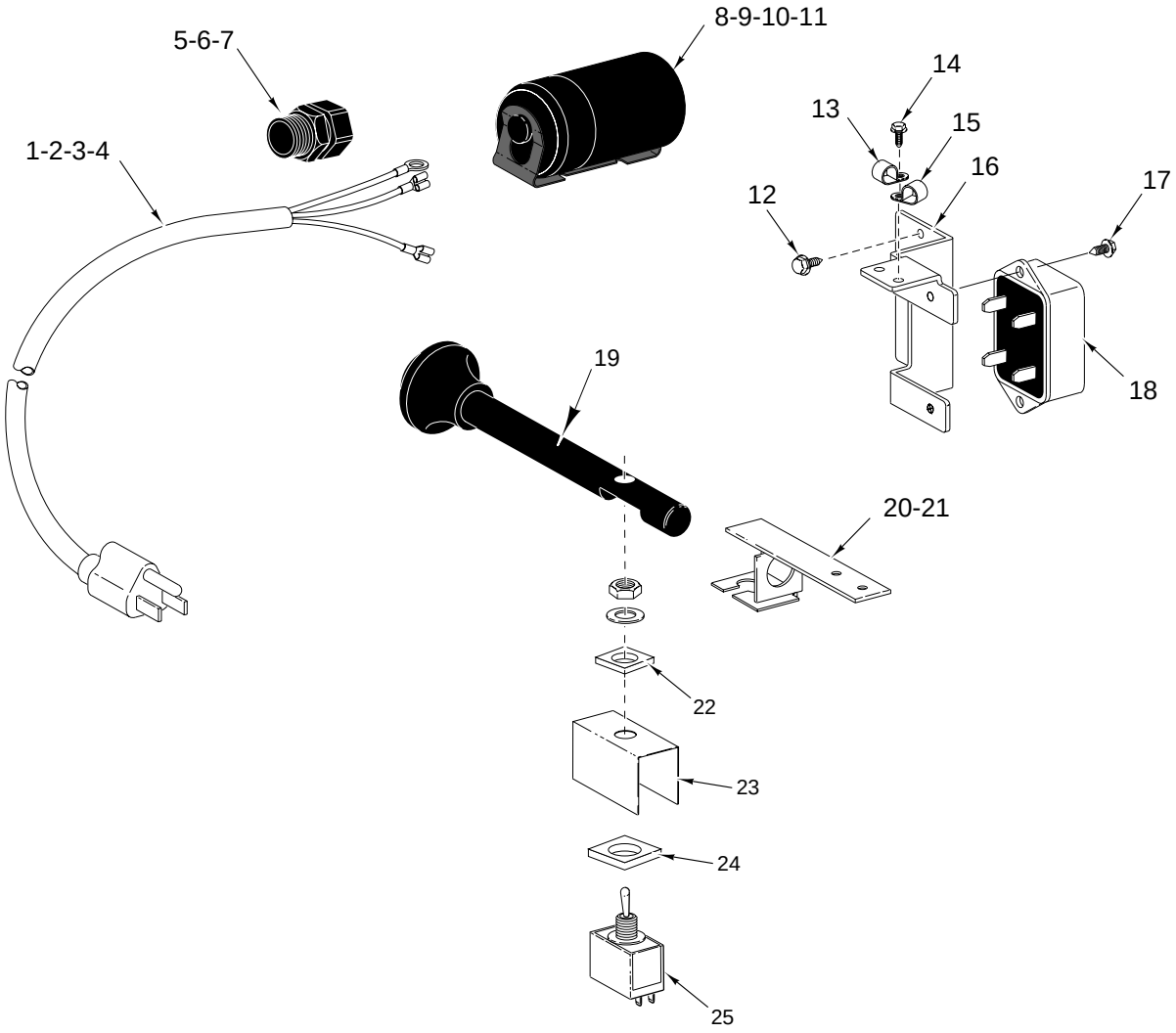

PL-53198

ELECTRICAL UNIT

© HOBART CORPORATION, 1999

ELECTRICAL UNIT

ILLUS. PL-53198	PART NO.	NAME OF PART	AMT.
1	00-117542-00066	Cord & Plug Assy. (100/120 V.)	1
2	00-117542-00067	Cord & Plug Assy. (240 V.)	1
3	00-117542-00039	Cord Assy. (I.E.C.)	1
4	SD-015-41	Self-Tapping Screw 8-32 x ½ Phil. Pan Hd., “Taptite”	1
5	FE-022-84	Connector - Strain Relief	1
6	WL-010-01	Lockwasher 8 External Shakeproof	1
7	FE-006-05	Lock Nut ½	1
8	00-070486-00001	End Cap - Capicitor	1
9	00-070487-00021	Capacitor (50/60 Hz.)	1
10	00-066621-00003	Bracket - Capacitor	1
11	SD-024-16	Self-Tapping Screw 10-24 x ½ Phil Flat Hd., Type TT	1
12	SD-015-41	Self-Tapping Screw 8-32 x ½ Phil. Pan Hd., “Taptite”	2
13	00-438132-00001	Clamp - 5/16 “P”	1
14	SD-038-16	Self-Tapping Screw 6-32 x ⅜ Hex Washer Hd., Type RL	1
15	00-078752-00012	Clamp - Cable ¼ “P”	1
16	00-438929	Bracket - Motor Start Switch (Includes items 17 & 18)	1
17	SD-015-38	Self-Tapping Screw 6-32 x ⅜ Phil Pan Hd., Type T	2
18	00-271612-00002	Switch - Electronic Start (50/60 Hz.)	1
19	00-439043	Knob - ON/OFF	1
20	00-479665	Bracket - Switch On/Off	1
21	SD-038-16	Self-Tapping Screw 6-32 x ⅜ Hex Washer Hd., Type RL	2
22	00-479746	Washer - Square, Small	1
23	00-437657	Switch - Mylar	1
24	00-479635	Washer - Square, Large	1
25	00-087711-148-1	Switch (With Nuts)	1
	00-477325-00001	Harness - Wiring	1
	00-477614	Wire - Bundle	1
	00-065890-00085	Line - Splice	2
	00-065890-00029	Connector - Insulated	AR

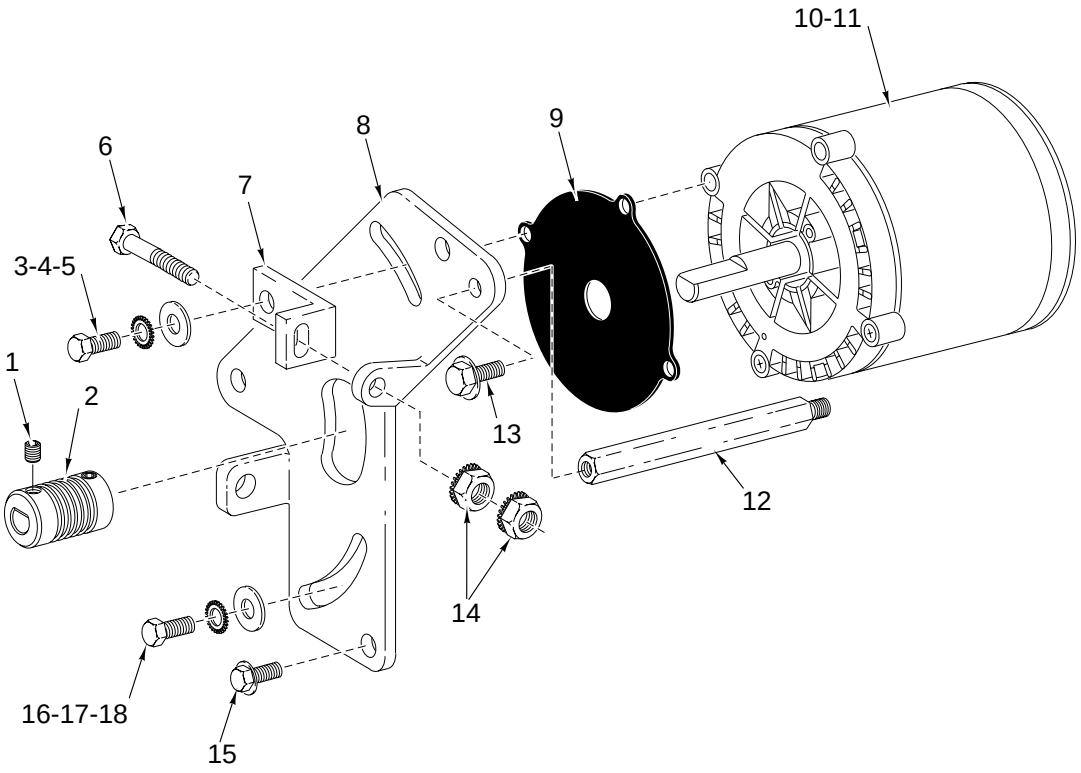

PL-52336

DRIVE MOTOR UNIT

DRIVE MOTOR UNIT

ILLUS. PL-52336	PART NO.	NAME OF PART	AMT.
1	SC-123-65	Set Screw Special ¼-28 x ⅜ Hdls., Flat Pt	2
2	00-438844-00002	Sheave - Poly “V”	1
3	SC-037-73	Cap Screw ⅜-16 x 1 Hex Hd.	2
4	WL-007-25	Lockwasher ⅜ Ext	2
5	WS-018-22	Washer	2
6	SC-118-98	Cap Screw ¼-20 x 2 Hex Hd.	1
7	00-477532	Bracket - Tensioner Adjustment	1
8	00-477760	Plate - Motor	1
9	00-439032	Gasket - Motor	1
10	00-438846-00001	Motor (60 Hz.)	1
11	00-438846-00002	Motor (50 Hz.)	1
12	00-438984	Stand - Off	1
13	SC-041-01	Cap Screw ¼-20 x ¾ Hex Hd	1
14	NS-044-14	Nut - ¼-20 Hex “Keps”	2
15	SD-038-18	Self - Tapping Scew 5/16-18 x ¾ Hex Washer Hd., Type RL	3
16	SC-037-73	Cap Screw ⅜-16 x 1 Hex Hd.	1
17	WL-007-25	Lockwasher ⅜ Ext	1
18	WS-018-22	Washer	1

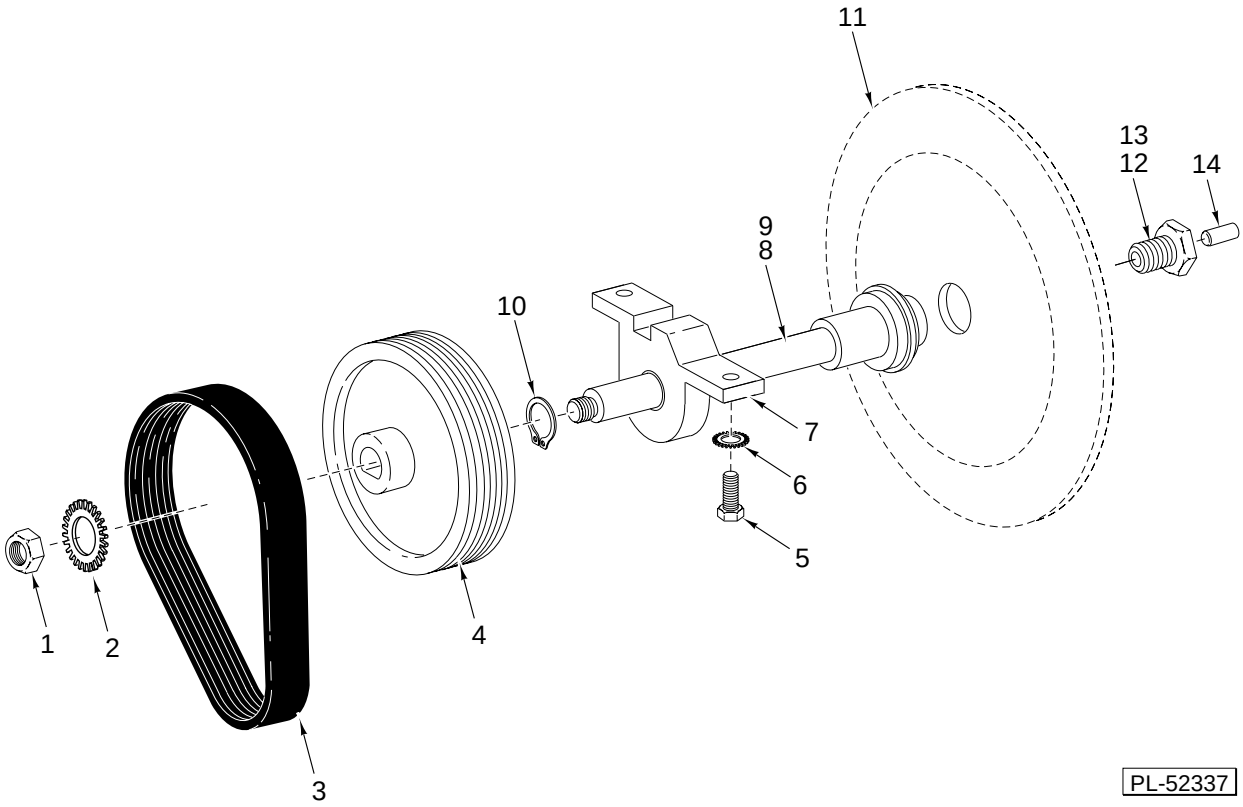

KNIFE SHAFT UNIT

ILLUS. PL-52337	PART NO.	NAME OF PART	AMT.
1	NS-017-41	Nut - Jam ⅝-18 Hex	1
2	WL-004-17	Lockwasher ⅝ Light	1
3	00-438845	Belt - Poly “V”	1
4	00-439049	Sheave - Poly “V” Large 6 Groove	1
5	SC-037-73	Cap Screw ⅜-16 x 1 Hex Hd.	2
6	WL-007-25	Lockwasher ⅜ Ext	2
7	00-477725-00002	Retainer - Lower Hub & Bearing (Incls. item 8)	1
8	BB-015-08	Ball Bearing	1
9	00-438915-00002	Shaft - Knife	1
10	RR-009-07	Retaining Ring	1
11	00-439870-00004	Knife (Packaged)	1
12	00-073356-00002	Screw - Knife (Incls. items 13 & 14)	1
13	SC-064-04	Set Screw ¼-28 x ⅜ Hdls., Flat Pt. “Nylok”	1
14	00-073265	Plug - Plate Thrust	1

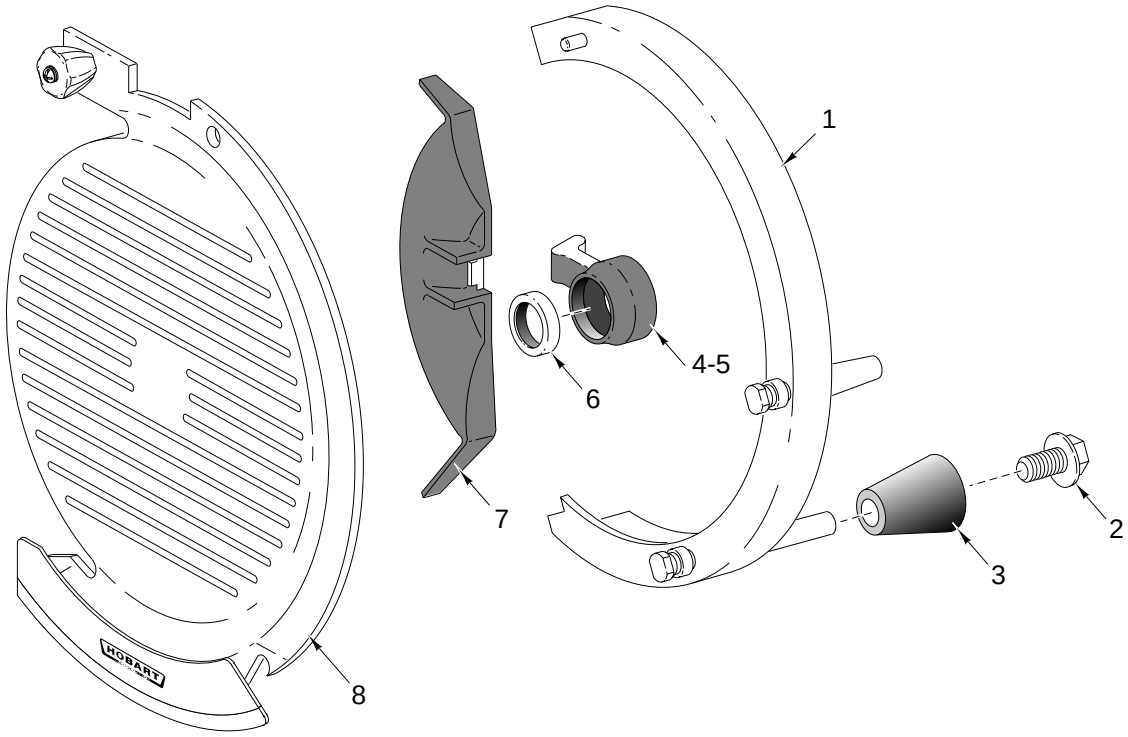

PL-52340

TOP COVER & LOCK KNOB UNIT

ILLUS. PL-52340	PART NO.	NAME OF PART	AMT.
1	00-438920-00002	Guard - Knife Ring	1
2	SD-038-14	Self - Tapping Screw ¼ - 20 Hex Washer Hd., Type RL	2
3	00-438975	Ferrule - Ring Guard	2
4	00-438974	Deflector Mount	1
5	SD-038-19	Self - Tapping Screw 8-18 x ⅜ Hex Washer Hd.	3
6	00-439015	Knife Shaft Ring	1
7	00-478289	Product Deflector	1
8	00-478442	Knife Assy.	1

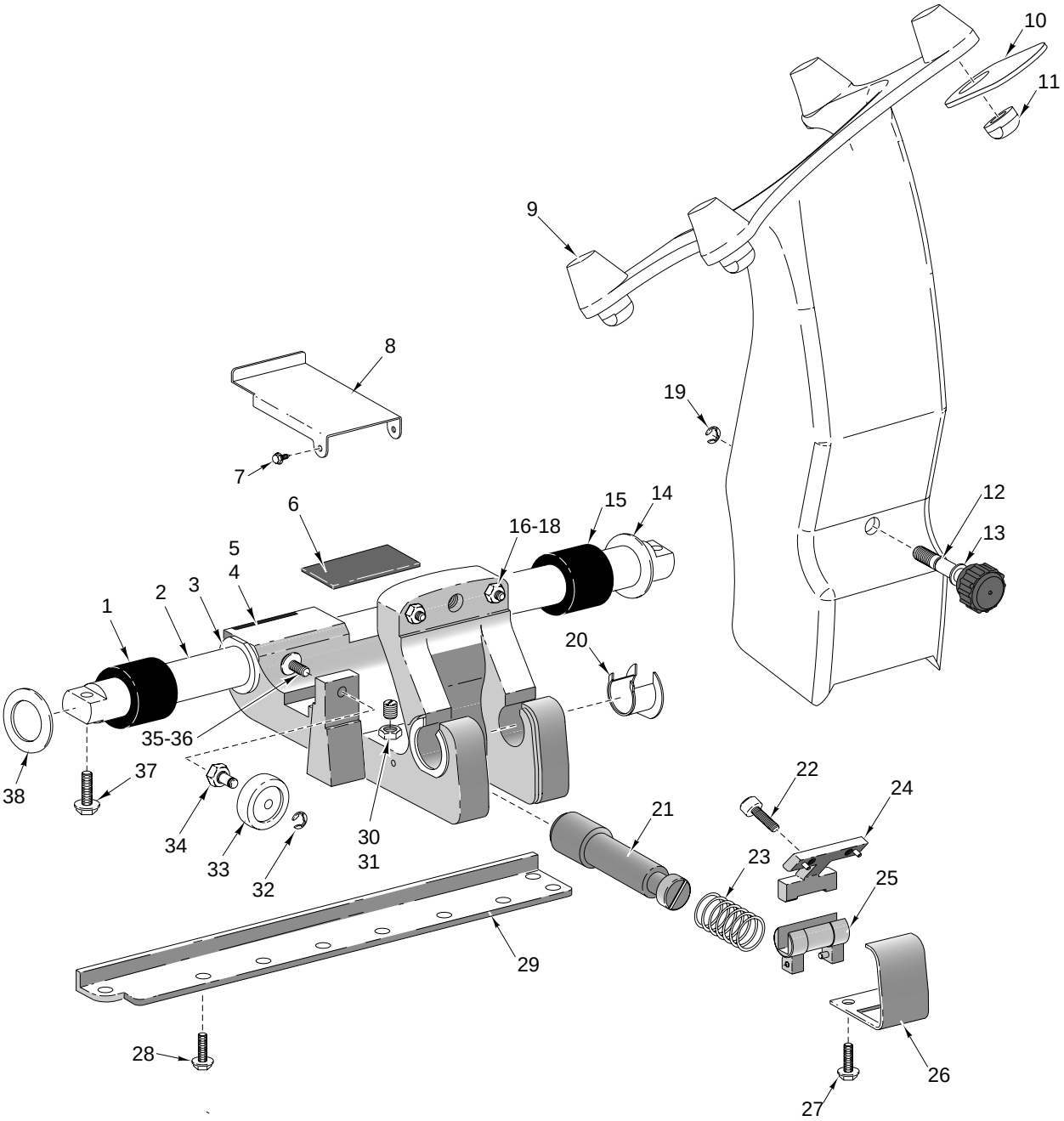

PL-53197

TRANSPORT CARRIAGE UNIT

TRANSPORT CARRIAGE UNIT

ILLUS. PL-53197	PART NO.	NAME OF PART	AMT.
1	00-477555	Bumper - Slide Rod	1
2	00-438907	Slide - Rod	1
3	00-439007	Bearing - Transport	2
4	00-477751	Transport Carriage Assy. (Incls. items 5, 16 & 17)	1
5	00-439064	Magnet - Transport	1
6	00-439017	Wick - Slide Rod Lubrication	1
7	SD-038-16	Self-Tapping Screw 6-32 x ⅜ Hex Washer Hd., Type RL	3
8	00-478424	Cover - Interlock	1
9	00-479676-00002	Arm - Meat Tray Support	1
10	00-479675	Storage Clip - Heavy Meat Grip	1
11	00-479667	Nut - Carriage Tray	4
12	00-477534	Knob Assy.	1
13	00-478021	Washer - Belleville	4
14	00-435708	Washer - Backup (SST)	2
15	00-477555	Bumper - Slide Rod	1
16	SC-123-79	Set Screw 5/16-18 x 1	2
17	NS-018-06	Jam Nut 5/16-18 Hex	2
18	00-535871	Insert - Screw	2
19	RR-006-21	Retaining Ring	1
20	00-439006	Bearing - Pivot	2
21	00-478298	Shaft - Pivot Return	1
22	SC-123-08	Cap Screw ¼ - 20 x ⅝ Soc. Hd.	2
23	00-438902	Spring - Interlock Bar	1
24	00-478470-00002	Plate - Key	1
25	00-478412	Pivot - Tiltable Carrier	1
26	00-438900	Cover - Transport	1
27	SD-038-16	Self-Tapping Screw 6-32 x ⅜ Hex Washer Hd., Type RL	2
28	SD-038-22	Self - Tapping Screw 10-24 x ½ Hex Washer Hd., Type RL	9
29	00-438908	Bar - Transport Roller	1
30	00-477747	Set Screw - Special	1
31	NS-017-20	Jam Nut ⅜-24 Hex	1
32	RR-006-23	Ring - Retaining	1
33	00-478420	Roller - Transport	1
34	00-438911	Screw - Adjusting	1
35	WS-003-49	Washer	1
36	SC-123-56	Mach. Screw - Special ¼ - 28 x ½ Button Hd.	1
37	SD-033-08	Self-Tapping Screw 5/16-18 x 1 Hex Washer Hd., Type TT	2
38	00-435708	Washer - Backup (SST)	1
	00-478469-00002	Support - Tray Assy.	1

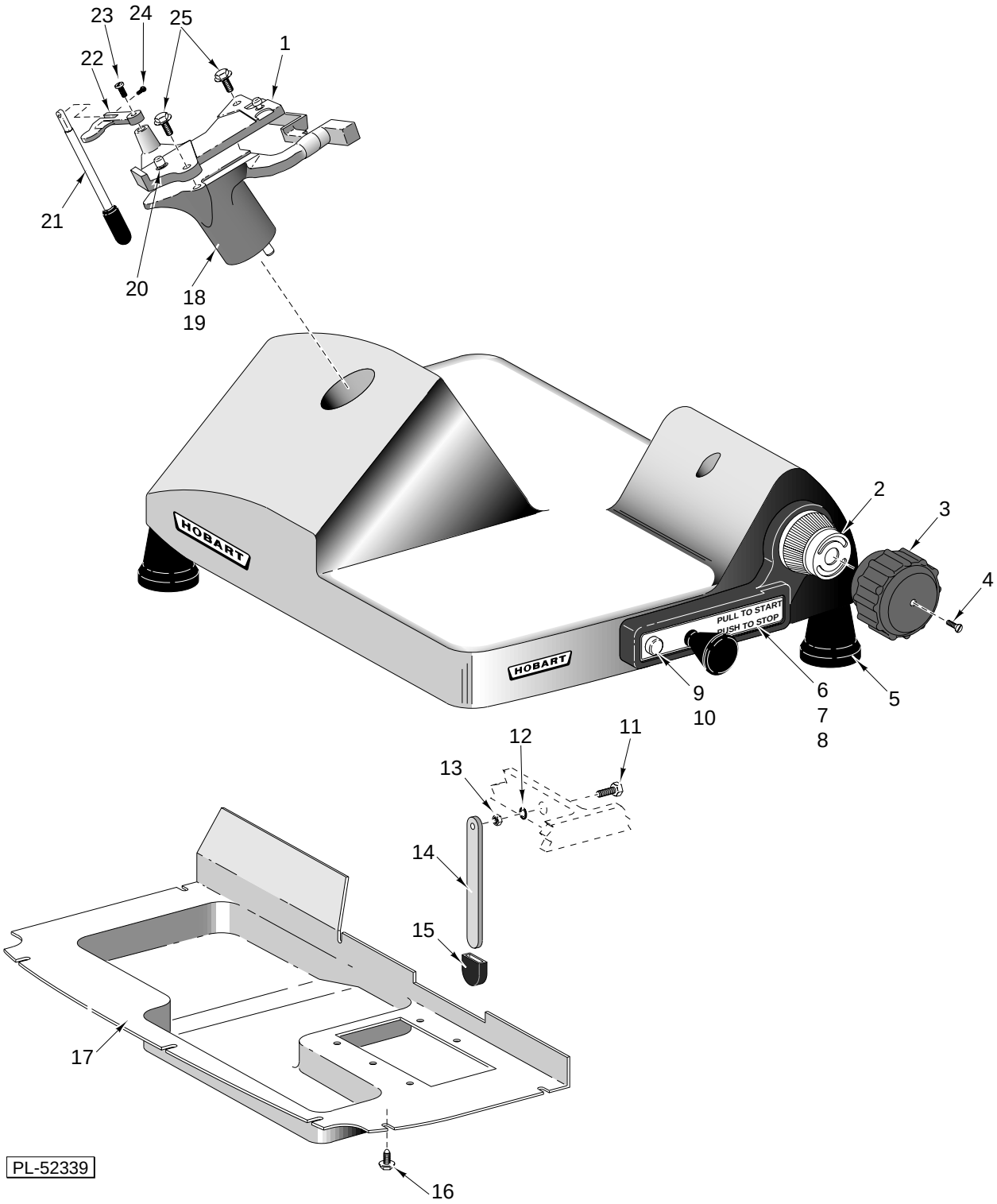
23
24
25
1
22
21
20
18
19
HOBART
HOBART
PULL TO START
PUSH TO STOP
2
3
4
9
10
6
7
8
5
12
11
13
14
15
17
16
PL-52339

BASE UNIT

BASE UNIT

ILLUS. PL-52339	PART NO.	NAME OF PART	AMT.
1	00-439063-00002	Base - Sharpener Housing (Incls. items 20 thru 24)	1
2	00-438982	Dial Assy.	1
3	00-439085	Knob - Indexing	1
4	SC-023-10	Mach. Screw 10-24 x ¾ Oval Hd.	1
5	00-477721	Foot (Tall)	4
6	00-439091	Bezel - Index	1
7	SD-038-21	Self - Tapping Screw 8-32 x 1¼ Phil. Pan Hd. Type TT	2
8	SD-038-20	Self - Tapping Screw 8-32 x 1 Phil. Pan Hd., Type TT	2
9	00-439042-00001	Lamp (125 V.)	1
10	00-439042-00002	Lamp (250 V.)	1
11	SC-041-02	Cap Screw ¼-20 x 1 Hex Hd.	1
12	WL-014-10	Lockwasher ¼ Ext. “Shakeproof”	1
13	NS-015-01	Full Nut ¼-20 Hex SST	1
14	00-437865	Leg - Cleaning	1
15	00-478023	Cap - Lift Leg	1
16	SD-038-16	Self-Tapping Screw 6-32 x ⅜ Hex Washer Hd., Type RL	11
17	00-438938	Cover - Bottom	1
18	00-477522-00003	Mount - Sharpener Housing	1
19	SD-038-13	Self - Tapping Screw 5/16-18 x ⅞ Hex Washer Hd., Type RL	2
20	00-438433	Pin - Lock	1
21	00-477524	Knob & Handle Assy.	1
22	00-437261	Cam	1
23	00-479953	Shoulder Bolt	1
24	SC-122-86	Mach. Screw “Special” 6-32 x ⅝ Pan Hd.	1
25	SD-038-14	Self - Tapping Screw ¼ - 20 Hex Washer Hd., Type RL	2

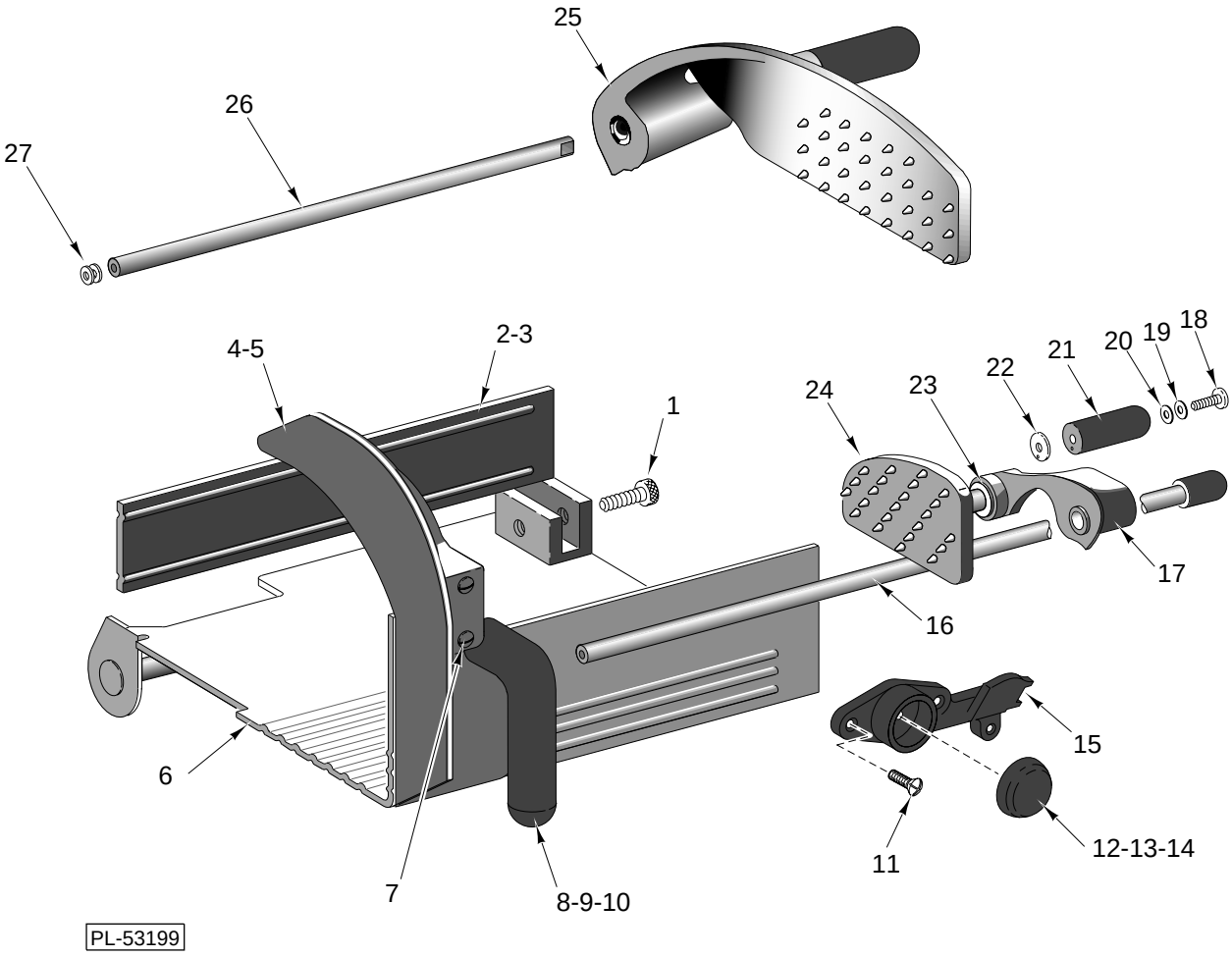

CARRIAGE TRAY UNIT

CARRIAGE TRAY UNIT

ILLUS. PL-53199	PART NO.	NAME OF PART	AMT.
1	00-290984	Thumb Screw - Fence	1
2	00-295118	Fence - Thumb Screw Assy. (Packaged)(Incls. item 5)(SST)	1
3	00-295117	High Fence & Thumb Screw Assy. (Horizontal Carriage Tray)(Incls. item 4)(SST)	1
4	00-439046	Support Handle & Slide Rod	1
5	SC-123-09	Mach. Screw Special 8-32 x ⅜ Phil. Oval Hd.	3
6	00-478464	Carriage Tray (SST)	1
7	SC-123-10	Mach. Screw Special 8-32 x 1½ Phil. Oval Hd.	2
8	00-439060	Handle - Carriage	1
9	WS-022-02	Washer	1
10	SC-041-02	Cap Screw ¼ -20 x 1 Hex Hd.	1
11	SC-123-09	Mach. Screw Special 8-32 x ⅜ Phil. Oval Hd.	3
12	00-477533	Cap - Meat Hanger	1
13	WS-022-02	Washer	1
14	SC-041-02	Cap Screw ¼ -20 x 1 Hex Hd.	1
15	00-478431	Hanger - Meat Grip	1
16	00-478015	Knob & Slide Rod Assy.	1
17	00-478264	Meat Grip Arm & Bearing Assy.	1
18	SC-122-93	Mach. Screw “Special” 10-24 x ½ Phil. Truss Hd.	1
19	00-070345	Washer - Handle Retaining	1
20	00-070344	Washer - Handle Tension	1
21	00-439078	Handle - Meat Grip (Non-Metallic)	1
22	00-437006	Washer - Handle	1
23	00-438280	Bushing	1
24	00-439009	Meat Grip	1
25	00-478444	Rear Meat Grip Assy.	1
26	00-478443	Slide Rod	1
27	00-478448	Spacer - Rear Heavy Meat Grip	2
	00-477537	Meat Grip Assy. (Light Weight)(Packaged)	1

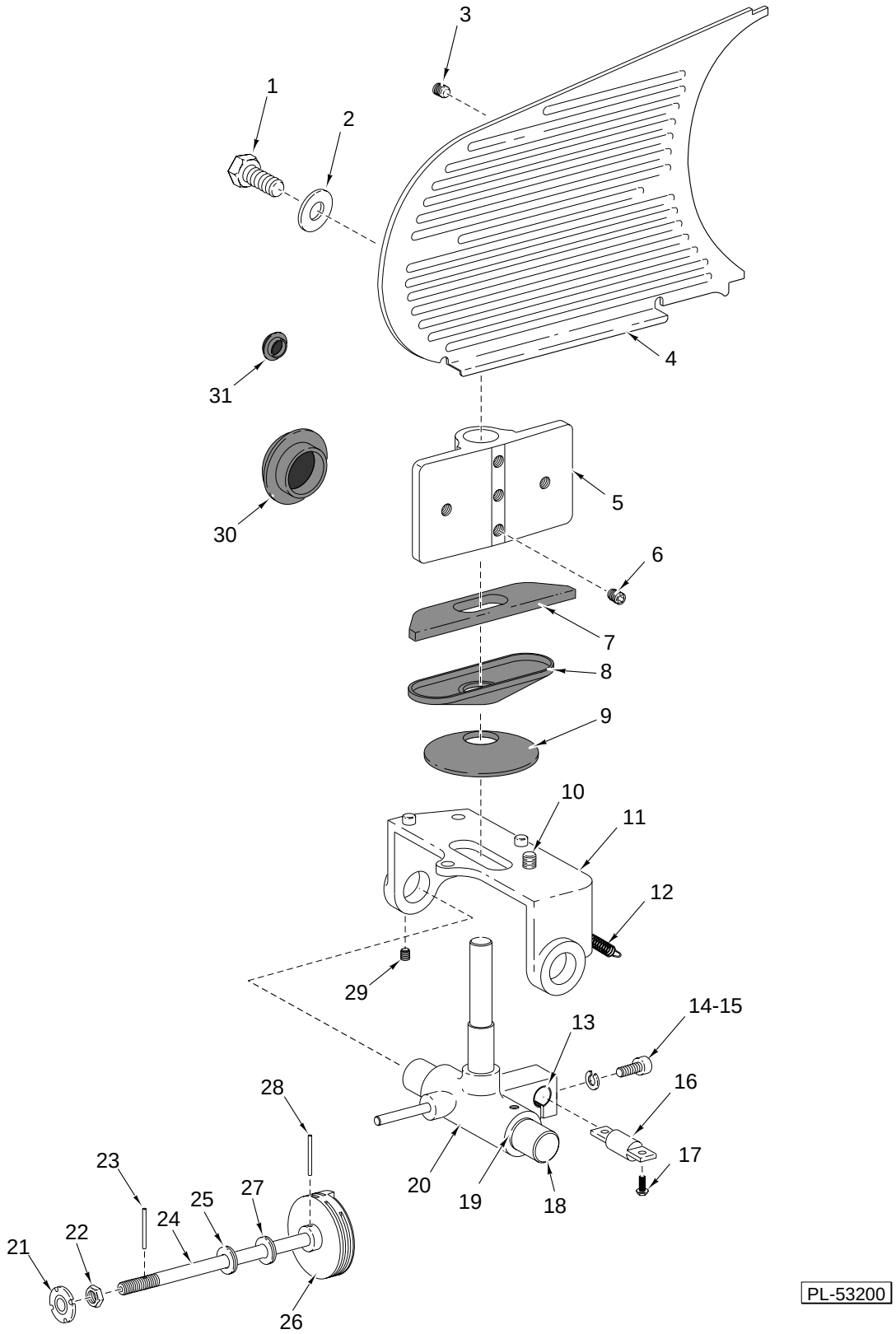

GAUGE PLATE UNIT

GAUGE PLATE UNIT

ILLUS. PL-53200	PART NO.	NAME OF PART	AMT.
1	SC-041-16	Cap Screw 5/16-18 x 1 3/8 Hex Hd. SST	2
2	WS-005-32	Washer	2
3	SC-123-52	Set Screw 5/16 - 24 x 5/8 Hdls., Flat Pt.	4
4	00-438980	Guage Plate Assy.	1
5	00-439021-00002	Mount - Special	1
6	SC-124-11	Set Screw 5/16 - 24 x 5/8 Hdls., Cone Pt.	3
7	00-477744	Cover - Gage Plate (Bottom)	1
8	00-477745	Retainer - Cover	1
9	00-439079	Disc - Cover	1
10	SC-037-75	Cap Screw 5/16-18 x 3/4 Hex Hd.	3
11	00-439072-00002	Support - Slide Index (Incls. item 28)	1
12	00-478432	Spring - Index Backlash	1
13	00-478425	Bushing - Antirotation Rod	1
14	SC-124-46	Cap - Screw 10-24 x 3/4 Soc. Hd.	3
15	WL-008-13	Lockwasher 10 Internal Shakeproof	3
16	00-478415	Rod - Index Antirotation	1
17	SD-038-23	Self - Tapping Screw 1/4 - 20 x 5/8 Hex Washer Hd., Type RL	2
18	00-438886	Rod - Index Slide	1
19	00-478426	Bushing - Index Slide	2
20	00-478416-00002	Slide - Index Mechanism	1
21	00-076948	Disc. - Indexing Drive	1
22	00-010928-00002	Nut - Special	2
23	RP-002-40	Roll Pin 3/32 Dia. x 3/4 Lg.	1
24	00-438890	Cam Shaft	1
25	00-088298	Washer - Belleville	2
26	00-479625	Cam - Indexing	1
27	WS-030-58	Washer	2
28	RP-003-12	Roll Pin 1/8 Dia. x 1 1/4 Lg.	1
29	SC-088-71	Set Screw 8-32 x 3/8 Hdls., Flat Pt.	2
30	00-477753	Plug - Hole (Large)	2
31	00-477754	Plug - Hole (Small)	4

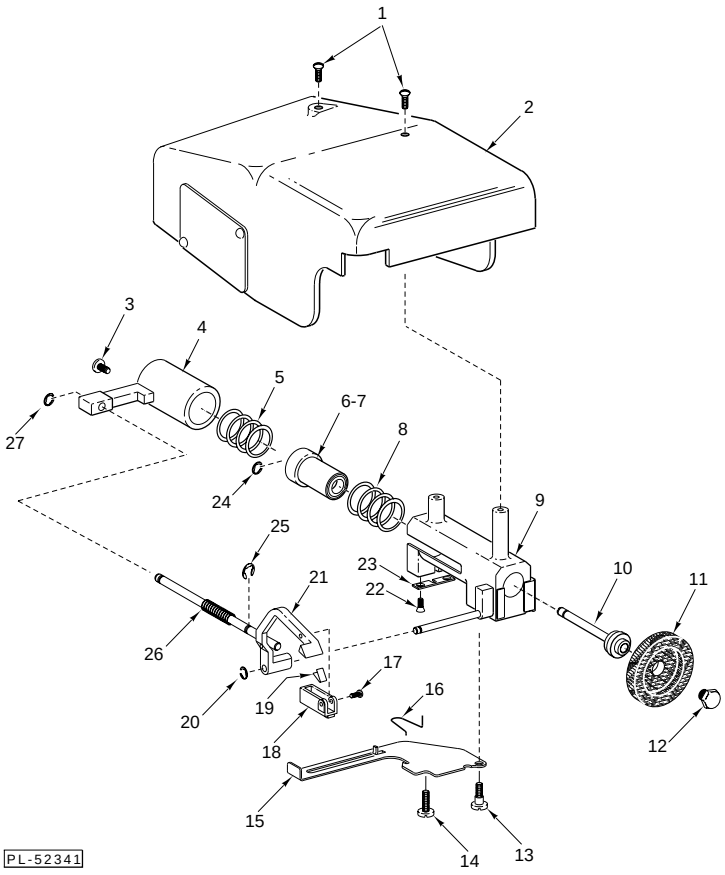

KNIFE SHARPENER UNIT

ILLUS. PL-52341	PART NO.	NAME OF PART	AMT.
1	SC-122-93	Mach. Screw “Special” 10-24 x ½ Phil. Truss Hd.	2
2	00-438459-00001	Plate & Cover Assy.	1
3	SC-122-87	Mach. Screw “Special” 8-32 x ¼ Pan Hd.	1
4	00-437260	Actuator	1
5	00-438430	Spring - Main	1
6	00-438464	Plunger & Ball Bearing Assy. (Incls. item 7)	1
7	BB-021-36	Ball Bearing NSK R4BDD	2
8	00-438437	Spring - Return	1
9	00-438449	Housing & Stud Assy.	1
10	00-438417	Shaft - Grinding Wheel	1
11	00-439691	Stone Service Kit	1
12	00-435814	Retaining Screw (R.H.)	1
13	00-438442	Screw - Shoulder “Special”	1
14	SC-122-87	Mach. Screw “Special” 8-32 x ¼ Pan Hd.	1
15	00-439698	Lever - Locking	1
16	00-438435	Spring “U” (Long end inserted into housing)	1
17	SC-122-84	Mach. Screw “Special” 2-56 x 9/16 Pan Hd.	1
18	00-478747	Stone - Truing	1
19	00-435324	Spring - Truing Stone	2
20	RR-006-22	Retaining Ring	1
21	00-437262	Arm - Truing & Pusher Rod Assy.	1
22	SC-122-85	Mach. Screw “Special” 4-40 x ¼ Flat Hd.	2
23	00-439700	Plate - Rear Locking	1
24	RR-006-22	Retaining Ring	1
25	RR-006-03	Retaining Ring	1
26	00-438426	Spring - Truing Arm	1
27	RR-006-03	Retaining Ring	1
	00-437263-00001	Sharpener Assy.(Incls. items 1 thru 27)	1