HOBART

CATALOG OF REPLACEMENT PARTS



SLICERS

(INCLUDES MOTOR PARTS)

2712 SLICER **ML-104822**

A product of HOBART CORPORATION 701 S. RIDGE AVENUE TROY, OHIO 45374-0001

FORM 34211 (3-99)

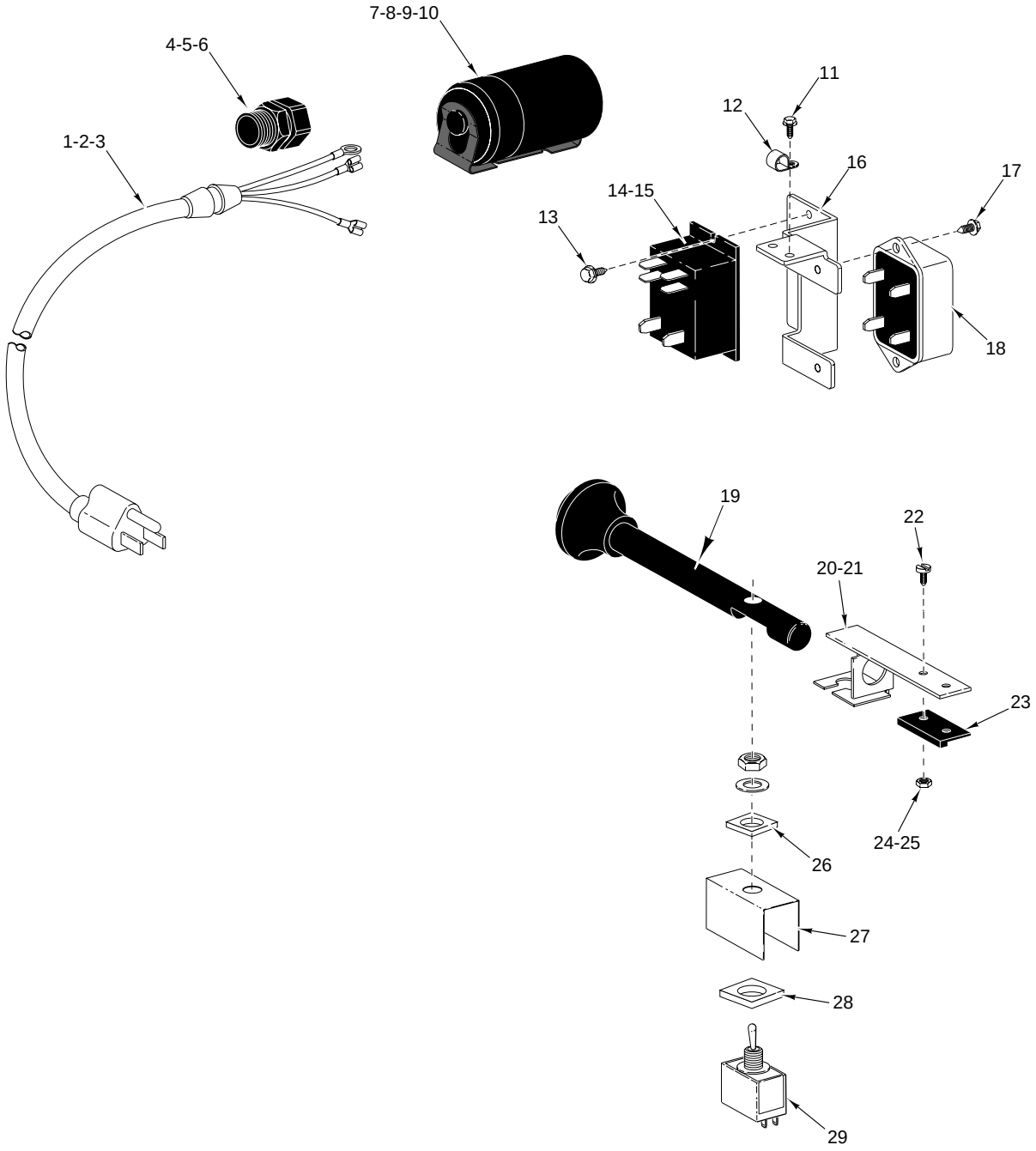

PL-53242

ELECTRICAL UNIT

© HOBART CORPORATION, 1999

ELECTRICAL UNIT

ILLUS. PL-53242	PART NO.	NAME OF PART	AMT.
1	00-117542-00066	Cord & Plug Assy. (100/120 V.)	1
2	00-117542-00067	Cord & Plug Assy. (240 V.)	1
3	SD-015-41	Self - Tapping Screw 8-32 x ½ Phil. Pan Hd., Type TT	1
4	FE-022-84	Strain Relief (Use with items 1, 2 & 3)	1
5	WL-010-01	Washer (Use with items 1, 2 & 3)	1
6	FE-006-05	Lock Nut ½	1
7	00-070486-00001	End Cap - Capacitor	1
8	00-070487-00001	Capacitor	1
9	00-066621-00003	Bracket - Capacitor	1
10	SD-024-16	Self-Tapping Screw 10-24 x ½ Phil Flat Hd., Type TT	1
11	SD-038-16	Self-Tapping Screw 6-32 x ⅜ Hex Washer Hd., Type RL	1
12	00-438132-00001	Clamp - 5/16 "P"	1
13	SD-038-16	Self-Tapping Screw 6-32 x ⅜ Hex Washer Hd., Type RL	2
14	00-087714-042-1	Relay (2 Pole)(Under 150 V.)	1
15	00-087714-042-3	Relay (2 Pole) (220 - 240 V.)	1
16	00-438929	Bracket - Motor Start Switch (Incls. items 17 & 18)	1
17	SD-015-38	Self-Tapping Screw 6-32 x ⅜ Phil Pan Hd., Type T	2
18	00-271612-00002	Switch - Electronic Start (50/60 Hz.)	1
19	00-439043	Knob - ON/OFF	1
20	00-479665	Bracket - Switch On/Off	1
21	SD-038-16	Self-Tapping Screw 6-32 x ⅜ Hex Washer Hd., Type RL	2
22	SC-120-97	Mach. Screw 4-40 x ⅜ Flat Hd. SST	2
23	00-087711-00298	Switch - Home Start	1
24	WL-006-43	Lockwasher 4 Medium	2
25	NS-011-01	Mach. Nut 4/40 Hex	2
26	00-479746	Washer - Square, Small	1
27	00-437657	Switch - Mylar	1
28	00-479635	Washer - Square, Large	1
29	00-087711-148-1	Switch (With Nuts)	1
	00-478384-00001	Harness - Wiring	1
	00-478389	Wire - Bundle	1
	00-065890-00085	Line - Splice	2
	00-065890-00029	Connector - Insulated	AR

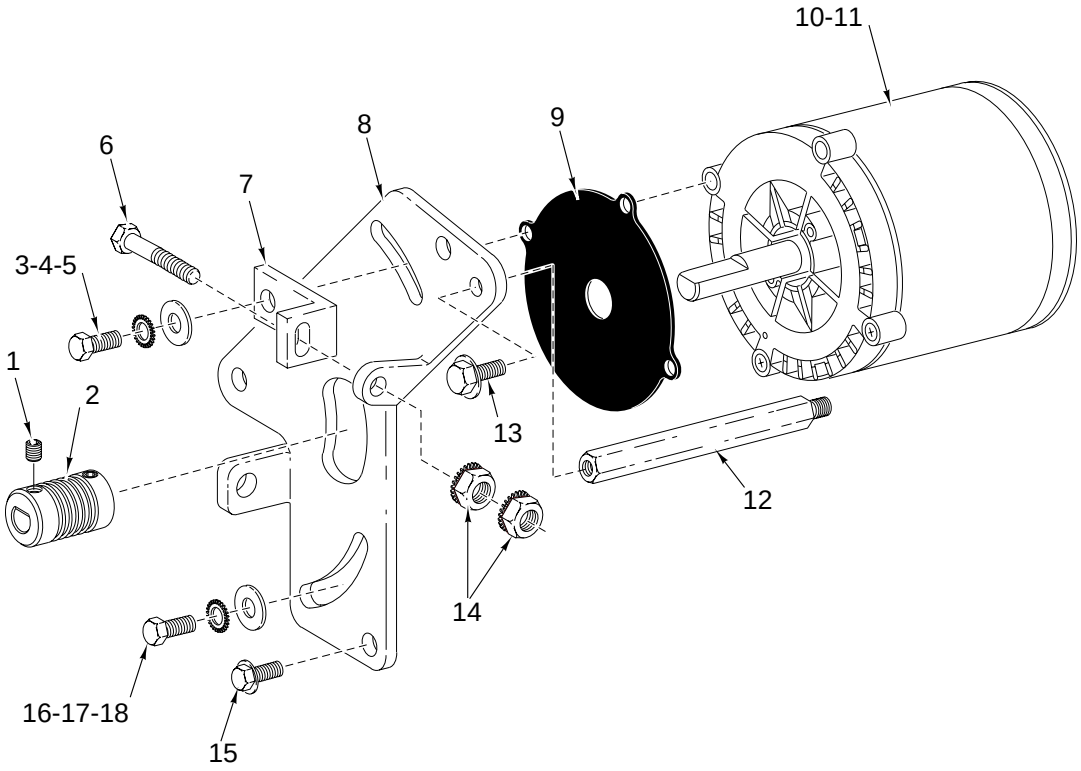

PL-52336

DRIVE MOTOR UNIT

DRIVE MOTOR UNIT

ILLUS. PL-52336	PART NO.	NAME OF PART	AMT.
1	SC-123-65	Set Screw Special ¼-28 x ⅜ Hdls., Flat Pt	2
2	00-438844-00002	Sheave - Poly “V”	1
3	SC-037-73	Cap Screw ⅜-16 x 1 Hex Hd.	2
4	WL-007-25	Lockwasher ⅜ Ext	2
5	WS-018-22	Washer	2
6	SC-118-98	Cap Screw ¼-20 x 2 Hex Hd.	1
7	00-477532	Bracket - Tensioner Adjustment	1
8	00-477760	Plate - Motor	1
9	00-439032	Gasket - Motor	1
10	00-438846-00001	Motor (60 Hz.)	1
11	00-438846-00002	Motor (50 Hz.)	1
12	00-438984	Stand - Off	1
13	SC-041-01	Cap Screw ¼-20 x ¾ Hex Hd	1
14	NS-044-14	Nut - ¼-20 Hex “Keps”	2
15	SD-038-18	Self - Tapping Scew 5/16-18 x ¾ Hex Washer Hd., Type RL	3
16	SC-037-73	Cap Screw ⅜-16 x 1 Hex Hd.	1
17	WL-007-25	Lockwasher ⅜ Ext	1
18	WS-018-22	Washer	1

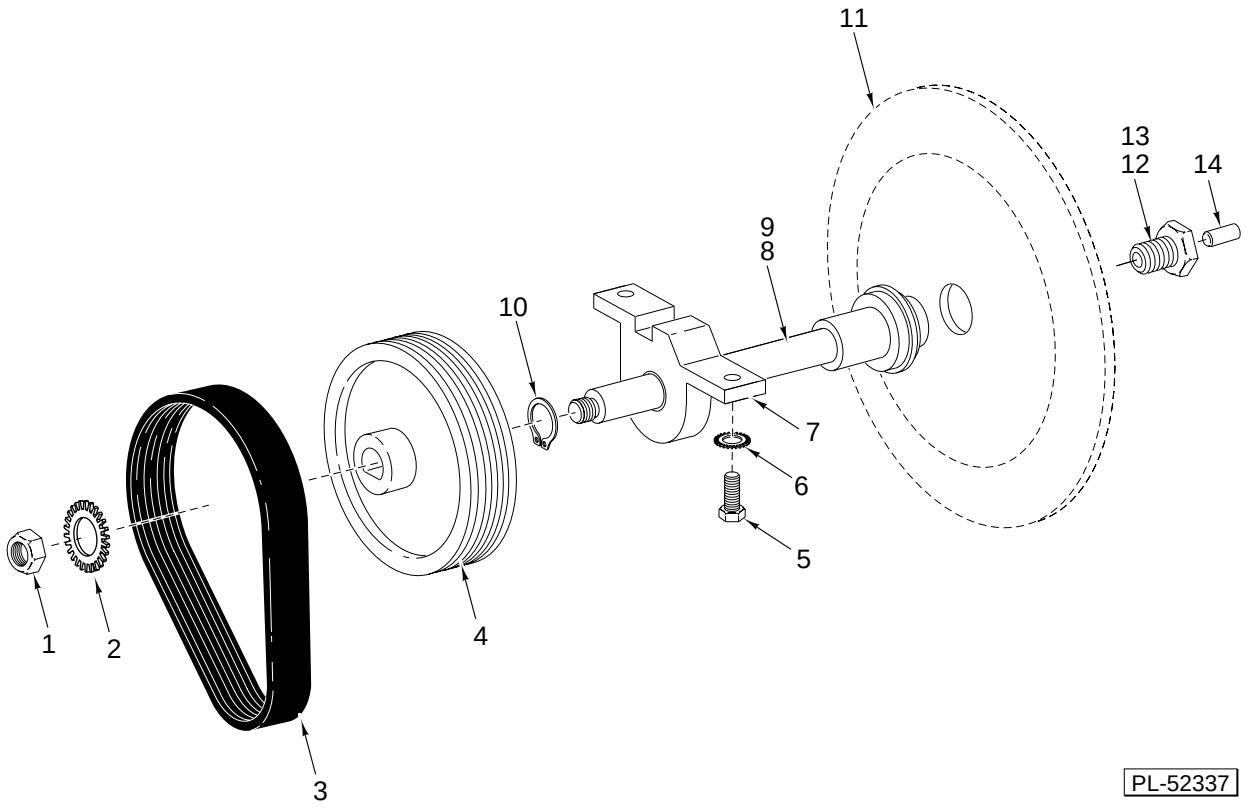

KNIFE SHAFT UNIT

ILLUS. PL-52337	PART NO.	NAME OF PART	AMT.
1	NS-017-41	Nut - Jam ⅝-18 Hex	1
2	WL-004-17	Lockwasher ⅝ Light	1
3	00-438845	Belt - Poly “V”	1
4	00-439049	Sheave - Poly “V” Large 6 Groove	1
5	SC-037-73	Cap Screw ⅜-16 x 1 Hex Hd.	2
6	WL-007-25	Lockwasher ⅜ Ext	2
7	00-477725-00002	Retainer - Lower Hub & Bearing (Incls. item 8)	1
8	BB-015-08	Ball Bearing	1
9	00-438915-00002	Shaft - Knife	1
10	RR-009-07	Retaining Ring	1
11	00-439870-00004	Knife (Packaged)	1
12	00-073356-00002	Screw - Knife (Incls. items 13 & 14)	1
13	SC-064-04	Set Screw ¼-28 x ⅜ Hdls., Flat Pt. “Nylok”	1
14	00-073265	Plug - Plate Thrust	1

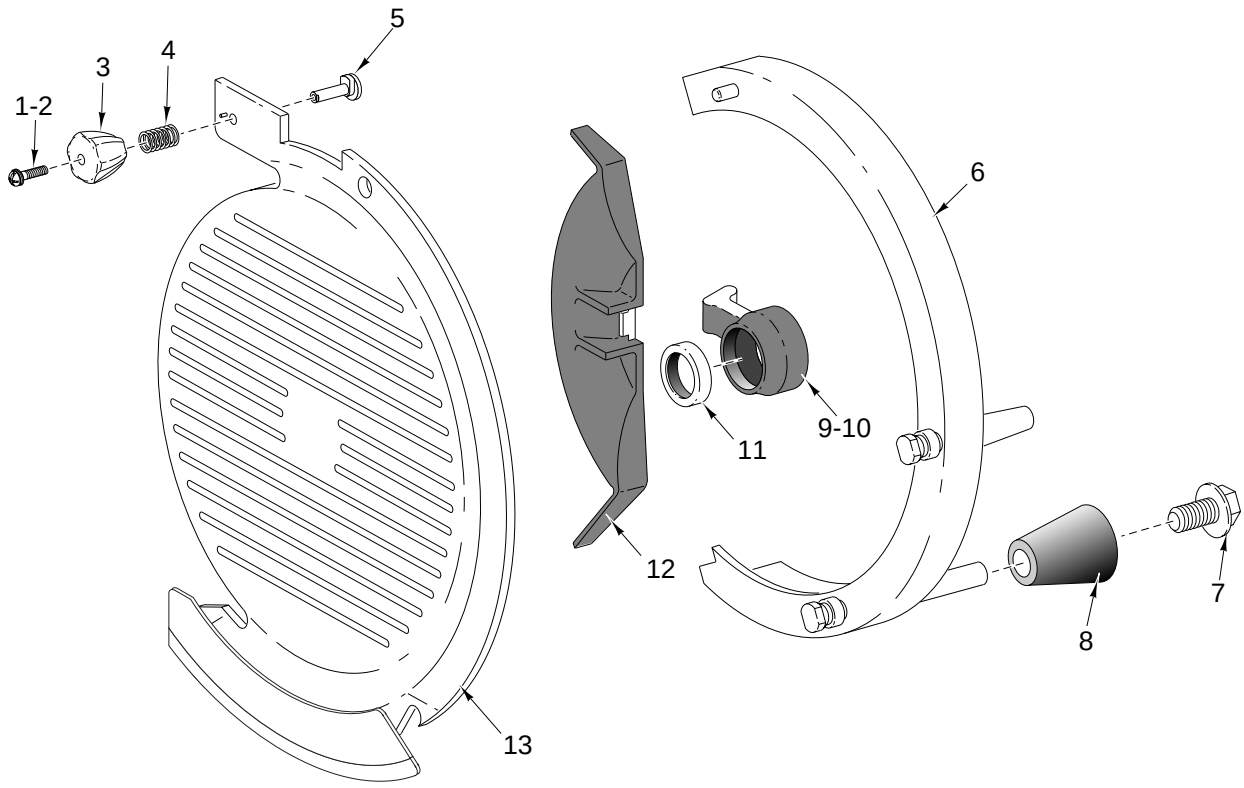

PL-53279

TOP COVER & LOCK KNOB UNIT

ILLUS. PL-53279	PART NO.	NAME OF PART	AMT.
1	SC-122-53	Mach. Screw 4-40 x ⅝ Phil. Pan Hd.	1
2	WL-013-02	Lockwasher 4 Int. Shakeproof	1
3	00-479699	Knob - Locking, Top Cover	1
4	00-437994	Spring - Top Cover	1
5	00-479698	Stud - Locking, Top Cover	1
6	00-438920-00002	Guard - Knife Ring	1
7	SD-038-14	Self - Tapping Screw ¼ - 20 Hex Washer Hd., Type RL	2
8	00-438975	Ferrule - Ring Guard	2
9	00-438974	Deflector Mount	1
10	SD-038-19	Self - Tapping Screw 8-18 x ⅜ Hex Washer Hd.	3
11	00-439015	Knife Shaft Ring	1
12	00-438937	Product Deflector	1
13	00-479740	Cover - Top & Lock Knob Assy.	1

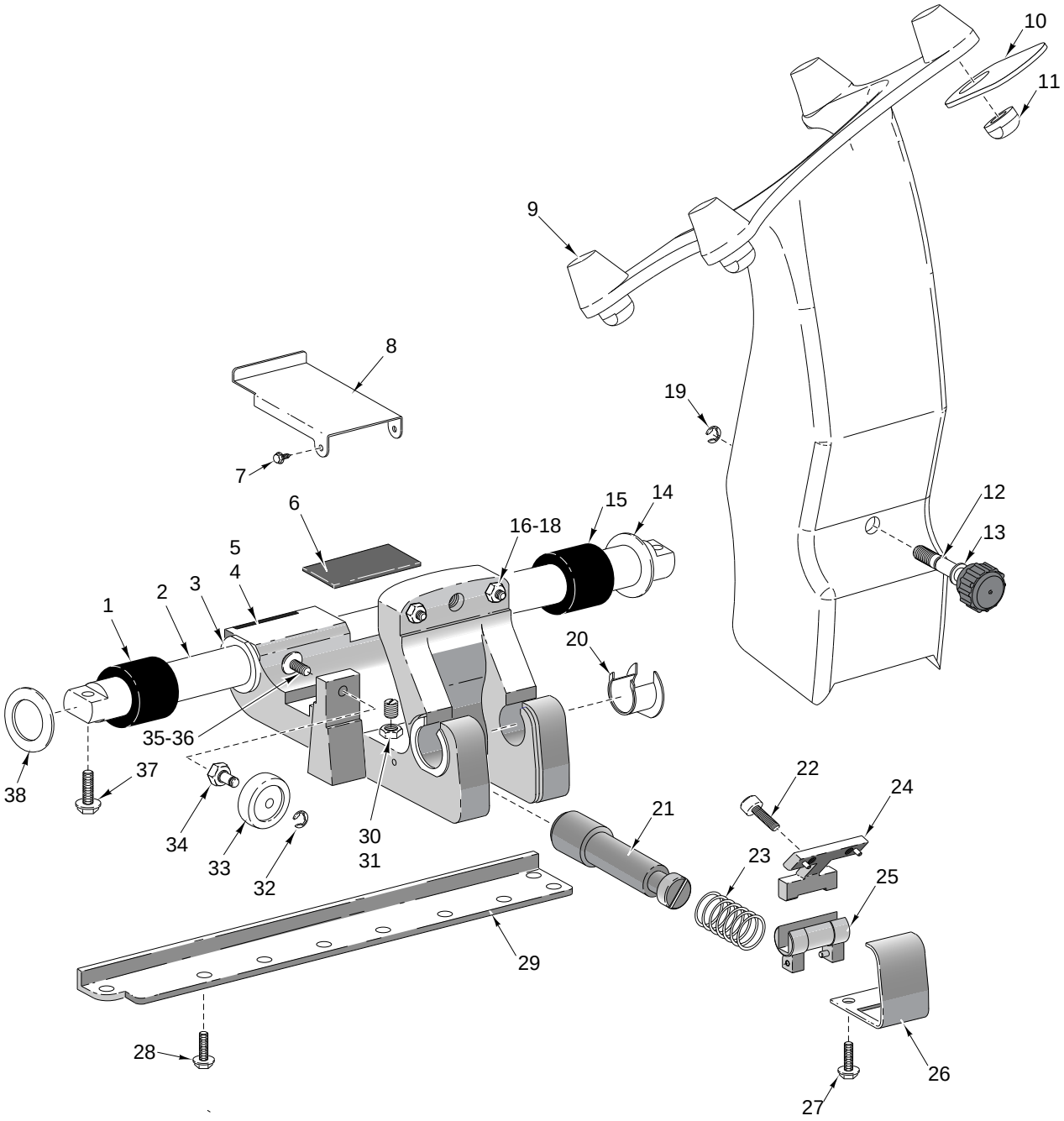

PL-53197

TRANSPORT CARRIAGE UNIT

TRANSPORT CARRIAGE UNIT

ILLUS. PL-53197	PART NO.	NAME OF PART	AMT.
1	00-477555	Bumper - Slide Rod	1
2	00-438907	Slide - Rod	1
3	00-439007	Bearing - Transport	2
4	00-477751	Transport Carriage Assy. (Incls. items 5, 16 & 17)	1
5	00-439064	Magnet - Transport	1
6	00-439017	Wick - Slide Rod Lubrication	1
7	SD-038-16	Self-Tapping Screw 6-32 x ⅜ Hex Washer Hd., Type RL	3
8	00-478424	Cover - Interlock	1
9	00-479676-00002	Arm - Meat Tray Support	1
10	00-479675	Storage Clip - Heavy Meat Grip	1
11	00-479667	Nut - Carriage Tray	4
12	00-477534	Knob Assy.	1
13	00-478021	Washer - Belleville	4
14	00-435708	Washer - Backup (SST)	2
15	00-477555	Bumper - Slide Rod	1
16	SC-123-79	Set Screw 5/16-18 x 1	2
17	NS-018-06	Jam Nut 5/16-18 Hex	2
18	00-535871	Insert - Screw	2
19	RR-006-21	Retaining Ring	1
20	00-439006	Bearing - Pivot	2
21	00-478298	Shaft - Pivot Return	1
22	SC-123-08	Cap Screw ¼ - 20 x ⅝ Soc. Hd.	2
23	00-438902	Spring - Interlock Bar	1
24	00-478470-00002	Plate - Key	1
25	00-478412	Pivot - Tiltable Carrier	1
26	00-438900	Cover - Transport	1
27	SD-038-16	Self-Tapping Screw 6-32 x ⅜ Hex Washer Hd., Type RL	2
28	SD-038-22	Self - Tapping Screw 10-24 x ½ Hex Washer Hd., Type RL	9
29	00-438908	Bar - Transport Roller	1
30	00-477747	Set Screw - Special	1
31	NS-017-20	Jam Nut ⅜-24 Hex	1
32	RR-006-23	Ring - Retaining	1
33	00-478420	Roller - Transport	1
34	00-438911	Screw - Adjusting	1
35	WS-003-49	Washer	1
36	SC-123-56	Mach. Screw - Special ¼ - 28 x ½ Button Hd.	1
37	SD-033-08	Self-Tapping Screw 5/16-18 x 1 Hex Washer Hd., Type TT	2
38	00-435708	Washer - Backup (SST)	1
	00-478469-00002	Support - Tray Assy.	1

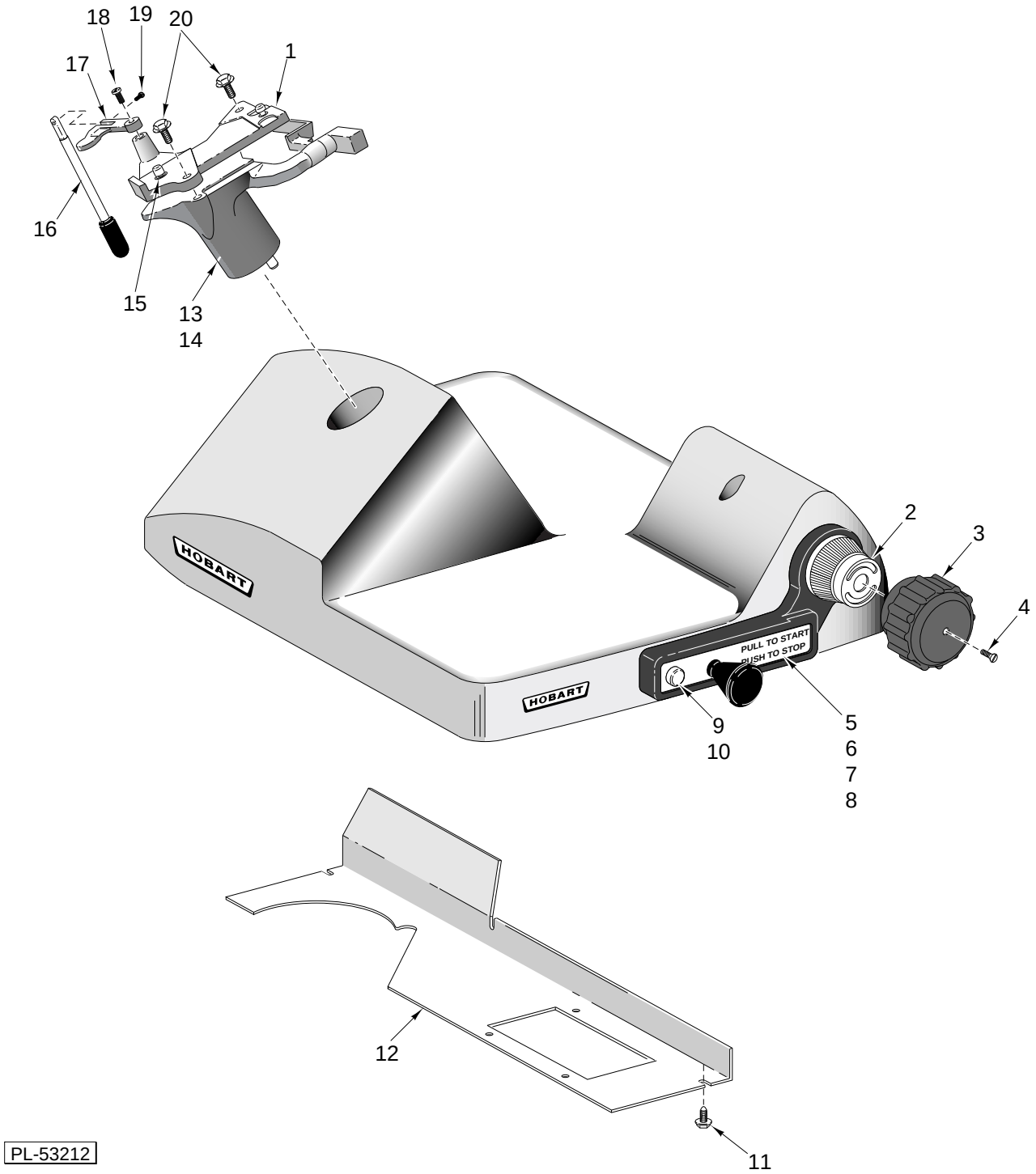
18
19
20
1
17
16
15
13
14
HOBART
HOBART
PULL TO START
PUSH TO STOP
2
3
4
9
10
5
6
7
8
12
11
PL-53212

BASE UNIT

BASE UNIT

ILLUS. PL-53212	PART NO.	NAME OF PART	AMT.
1	00-439063-00002	Base - Sharpener Housing	1
2	00-438982	Dial Assy.	1
3	00-439085	Knob - Indexing	1
4	SC-023-10	Mach. Screw 10-24 x ¾ Oval Hd.	1
5	00-477735	Label - Start/Stop	1
6	00-439091	Bezel - Index	1
7	SD-038-21	Self - Tapping Screw 8-32 x 1¼ Phil. Pan Hd. Type TT	2
8	SD-038-20	Self - Tapping Screw 8-32 x 1 Phil. Pan Hd., Type TT	2
9	00-439042-00001	Lamp (125 V.)	1
10	00-439042-00002	Lamp (250 V.)	1
11	SD-038-16	Self-Tapping Screw 6-32 x ⅜ Hex Washer Hd., Type RL	8
12	00-478036	Cover - Upper Electrical	1
13	00-477522-00002	Mount - Sharpener Housing	1
14	SD-038-13	Self - Tapping Screw 5/16-18 x ⅞ Hex Washer Hd., Type RL	2
15	00-438433	Pin - Lock	1
16	00-477524	Knob & Handle Assy.	1
17	00-437261	Cam	1
18	00-479953	Shoulder Bolt	1
19	SC-122-86	Mach. Screw “Special” 6-32 x ⅝ Pan Hd.	1
20	SD-038-14	Self - Tapping Screw ¼ - 20 Hex Washer Hd., Type RL	2

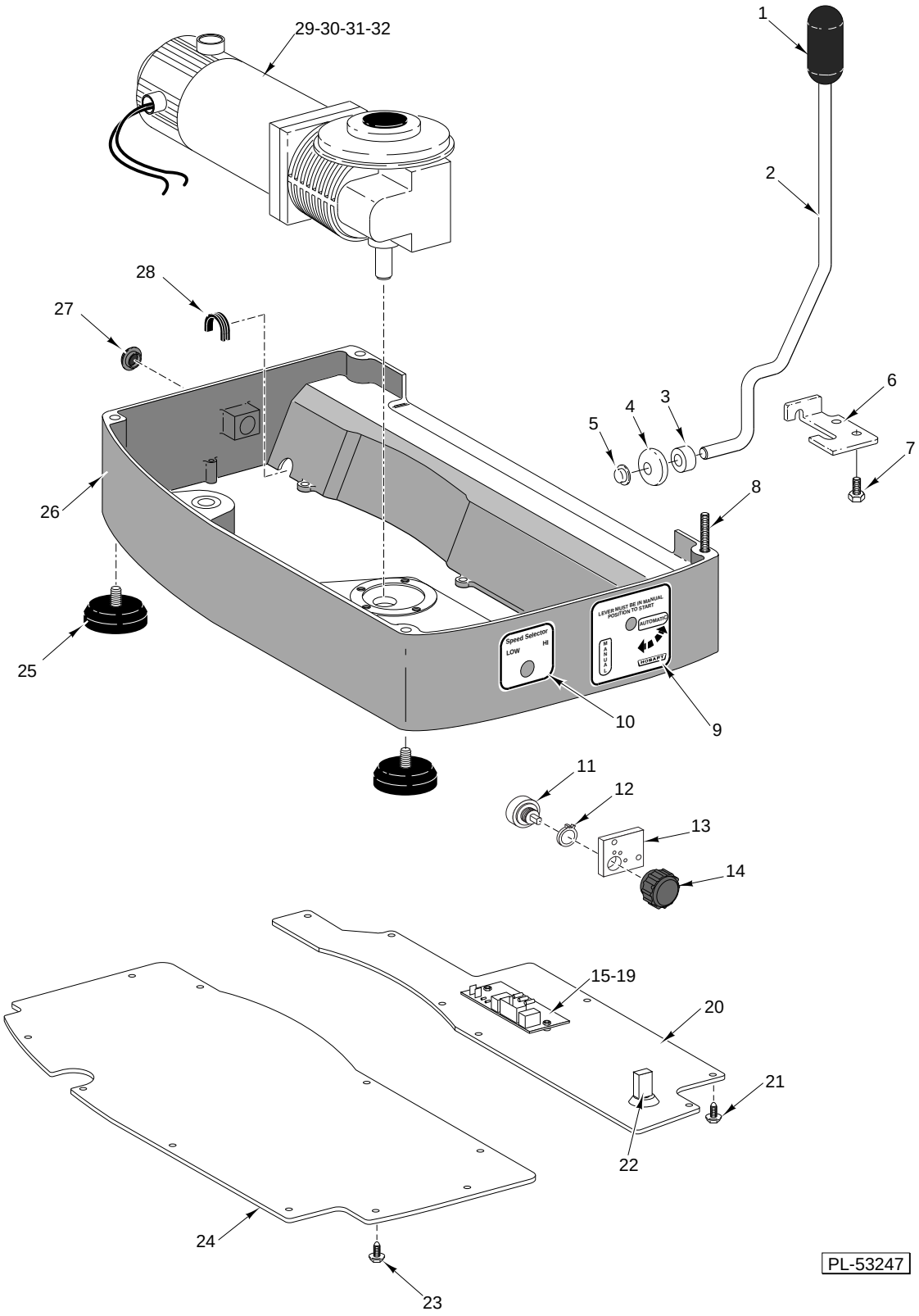

AUTOMATIC BASE UNIT

AUTOMATIC BASE UNIT

ILLUS. PL-53247	PART NO.	NAME OF PART	AMT.
1	00-478300	Handle - Lift Lever	1
2	00-478038	Lift - Lever	1
3	00-478299	Spacer - Lift Lever	1
4	00-108001	Foot - Lifting Lever	1
5	00-106502	Push Nut	1
6	00-121920	Retainer - Lifting Lever	1
7	SD-009-16	Self-Tapping Screw ¼-20 x ¾ Hex Hd., Type F	2
8	SC-123-99	Mach. Screw 5/16-18 x 5¼ Rd. Hd.	4
9	00-478274	Label - Auto/Man (Domestic)	1
10	00-478296	Label - Speed Select (Domestic)	1
11	00-478383	Switch Assy. - Carriage Speed	1
12	00-479748	Stop - Two Speed Slicer	1
13	00-479787	Bracket - Speed Control	1
14	00-479677	Knob & Fastener Assy.	1
15	00-479708	Board - Printed Circuit	1
16	00-478392	Spacer - Nylon	2
17	WS-023-22	Washer	2
18	WL-007-01	Lockwasher 6 External Shakeproof	2
19	NS-009-07	Mach. Nut 6-32 Hex	2
20	00-479647-00001	Cover - Electrical (115 V.)	1
21	SD-038-16	Self-Tapping Screw 6-32 x ⅜ Hex Washer Hd., Type RL	8
22	00-088196-00028	Breaker - 2 A Thermal Overload	1
23	SD-038-16	Self-Tapping Screw 6-32 x ⅜ Hex Washer Hd., Type RL	10
24	00-478034-00001	Cover - Bottom	1
25	00-477722	Foot	4
26	00-478468-00002	Base - Automatic	1
27	00-477753	Plug - Hole (Large)	1
28	00-478294	Grommet - Electric	1
29	00-478273	Motor - Flange Mount ⅛ H.P. (90 VDC)	1
30	00-479166	Motor - Flange Mount ⅛ H.P. (180 VDC)	1
31	SC-110-31	Mach. Screw 10-24 x ¾ Hex Hd.	4
32	WL-008-13	Lockwasher 10 Internal Shakeproof	4
	00-478301	Lever - Lifting Assy. (Incls. items 1 thru 5)	1
	00-478280-00001	Harness - Wiring	1
	00-478275	Kit - Leg Set 4"	1

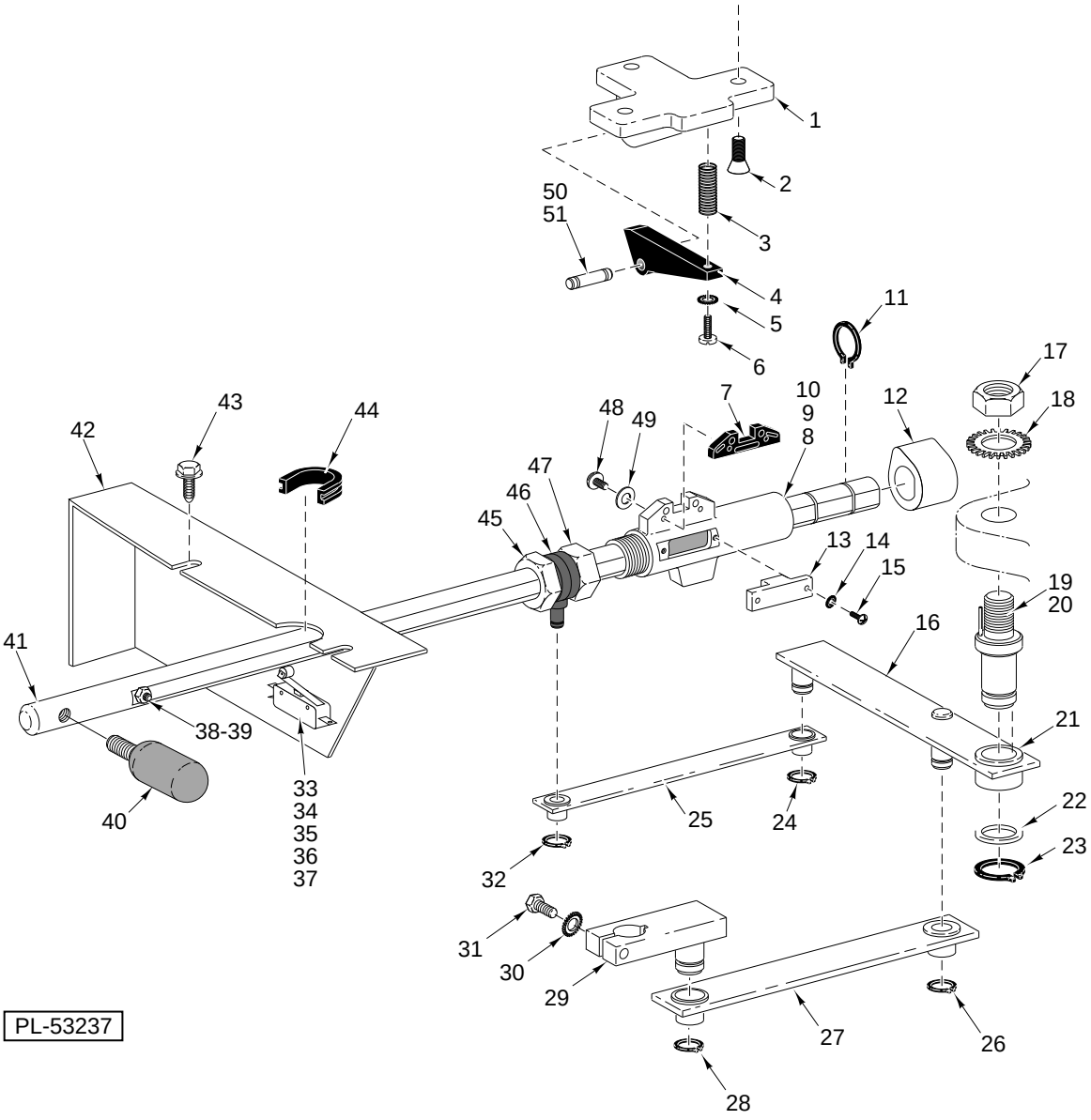

AUTOMATIC CARRIER UNIT

AUTOMATIC CARRIER UNIT

ILLUS. PL-53237	PART NO.	NAME OF PART	AMT.
1	00-478252-00002	Bracket - Pawl	1
2	SD-024-29	Self - Tapping Screw 10-32, Type TT	3
3	00-478429	Spring - Pawl	1
4	00-477762	Pawl - Auto Engage	1
5	WL-007-02	Lockwasher 6 Ext.	1
6	SC-009-49	Mach. Screw 6-32 x ⅜ Rd. Hd.	1
7	00-477763-00002	Ramp - Auto Engage	1
8	00-477755-00002	Carrier - Automatic	1
9	00-478269	Bearing (Auto) - Carrier	2
10	00-478277	Wick - Carrier	1
11	RR-007-21	Retaining Ring	2
12	00-478406	Lock Auto/Man	1
13	00-477775	Key - Auto Engage	1
14	WL-007-02	Lockwasher 6 Ext.	1
15	SC-009-49	Mach. Screw 6-32 x ⅜ Rd. Hd.	1
16	00-478003	Assy. - Main Link (Incls. item 23)	1
17	NS-017-41	Nut - Jam ⅝-18 Hex	1
18	WL-019-12	Lockwasher ⅝ Ext.	1
19	00-477781	Pivot - Main Link	1
20	RR-005-04	Retaining Ring (Spirolox)	1
21	00-478027	Bearing - Main Link	1
22	00-478040	Washer - Main Link	2
23	RR-009-05	Retaining Ring	1
24	RR-009-03	Retaining Ring	1
25	00-478006	Link Assy. - Carrier	1
26	RR-007-21	Retaining Ring	1
27	00-478005	Link Assy. - Motor Drive (Incls. item 23)	1
28	RR-007-21	Retaining Ring	1
29	00-478004	Assy. - Motor Crank Link	1
30	WL-007-16	Lockwasher ¼ External Shakeproof	1
31	SC-036-06	Cap Screw ¼-20 x 1 Hex Hd.	1
32	RR-009-03	Retaining Ring	1
33	00-087711-00270	Switch - Auto/Manual	1
34	00-478284	Barrier - Mylar	1
35	NS-009-02	Mach. Nut 4-40 Hex	2
36	WL-006-43	Lockwasher 4 Medium	2
37	SC-060-40	Mach. Screw 4-40 x ⅝ Rd. Hd.	2
38	00-478408	Pin - Carrier Shaft	1
39	NS-017-03	Jam Nut ¼-20 Hex	1
40	00-478010	Knob & Lever Assy.	1
41	00-477764	Shaft - Auto Carrier	1
42	00-479674	Bracket - Switch	1
43	SD-038-16	Self-Tapping Screw 6-32 x ⅜ Hex Washer Hd., Type RL	2
44	00-478294	Grommet - Electric	1
45	00-478024	Lock - Swivel	1
46	00-477761-00002	Swivel - Auto Carrier	1
47	00-478025	Nut - Swivel Lock	1
48	SC-007-68	Mach. Screw 8-32 x ⅝ Rd. Hd.	2
49	WL-007-07	Lockwasher 8 External Shakeproof	2
50	00-477767	Shaft - Pawl	1
51	RR-010-06	Retaining Ring	2

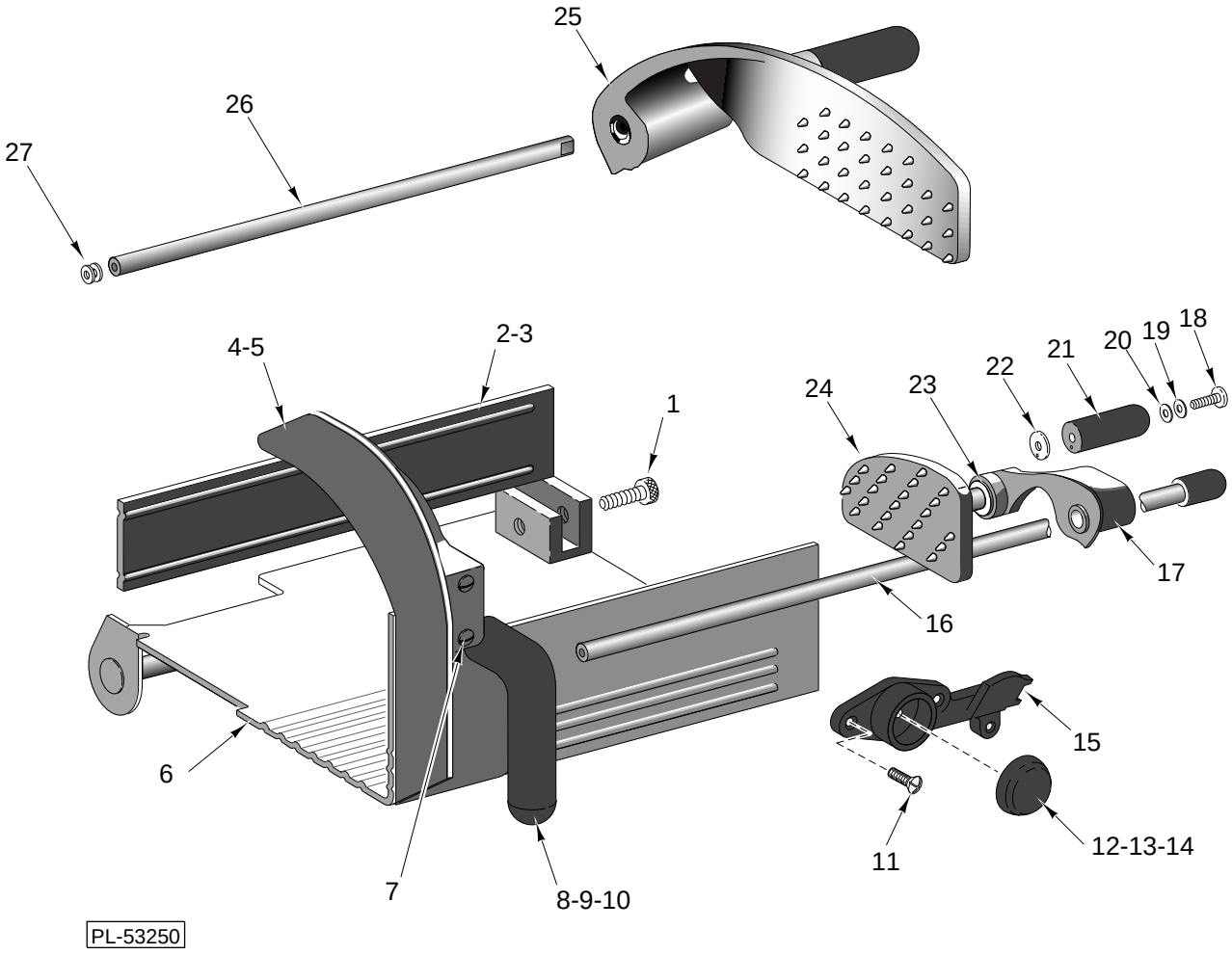

CARRIAGE TRAY UNIT

CARRIAGE TRAY UNIT

ILLUS. PL-53250	PART NO.	NAME OF PART	AMT.
1	00-290984	Thumb Screw - Fence	1
2	00-295118	Fence - Thumb Screw Assy. (Packaged)(Incls. item 5)(SST)	1
3	00-295117	High Fence & Thumb Screw Assy. (Horizontal Carriage Tray)(Incls. item 4)(SST)	1
4	00-439046	Support Handle & Slide Rod	1
5	SC-123-09	Mach. Screw Special 8-32 x ⅜ Phil. Oval Hd.	3
6	00-478464	Carriage Tray (SST)	1
7	SC-123-10	Mach. Screw Special 8-32 x 1½ Phil. Oval Hd.	2
8	00-439060	Handle - Carriage	1
9	WS-022-02	Washer	1
10	SC-123-09	Mach. Screw Special 8-32 x ⅜ Phil. Oval Hd.	3
11	SC-123-09	Mach. Screw Special 8-32 x ⅜ Phil. Oval Hd.	3
12	00-477533	Cap - Meat Hanger	1
13	WS-022-02	Washer	1
14	SC-041-02	Cap Screw ¼-20 x 1 Hex Hd.	2
15	00-478431	Hanger - Meat Grip	1
16	00-478015	Knob & Slide Rod Assy.	1
17	00-478264	Meat Grip Arm & Bearing Assy.	1
18	SC-122-93	Mach. Screw “Special” 10-24 x ½ Phil. Truss Hd.	1
19	00-070345	Washer - Handle Retaining	1
20	00-070344	Washer - Handle Tension	1
21	00-439078	Handle - Meat Grip (Non-Metallic)	1
22	00-437006	Washer - Handle	1
23	00-438280	Bushing	1
24	00-439009	Meat Grip	1
25	00-478444	Rear Meat Grip Assy.	1
26	00-478443	Slide Rod	1
27	00-478448	Spacer - Rear Heavy Meat Grip	2
	00-477537	Meat Grip Assy. (Light Weight)(Packaged)	1

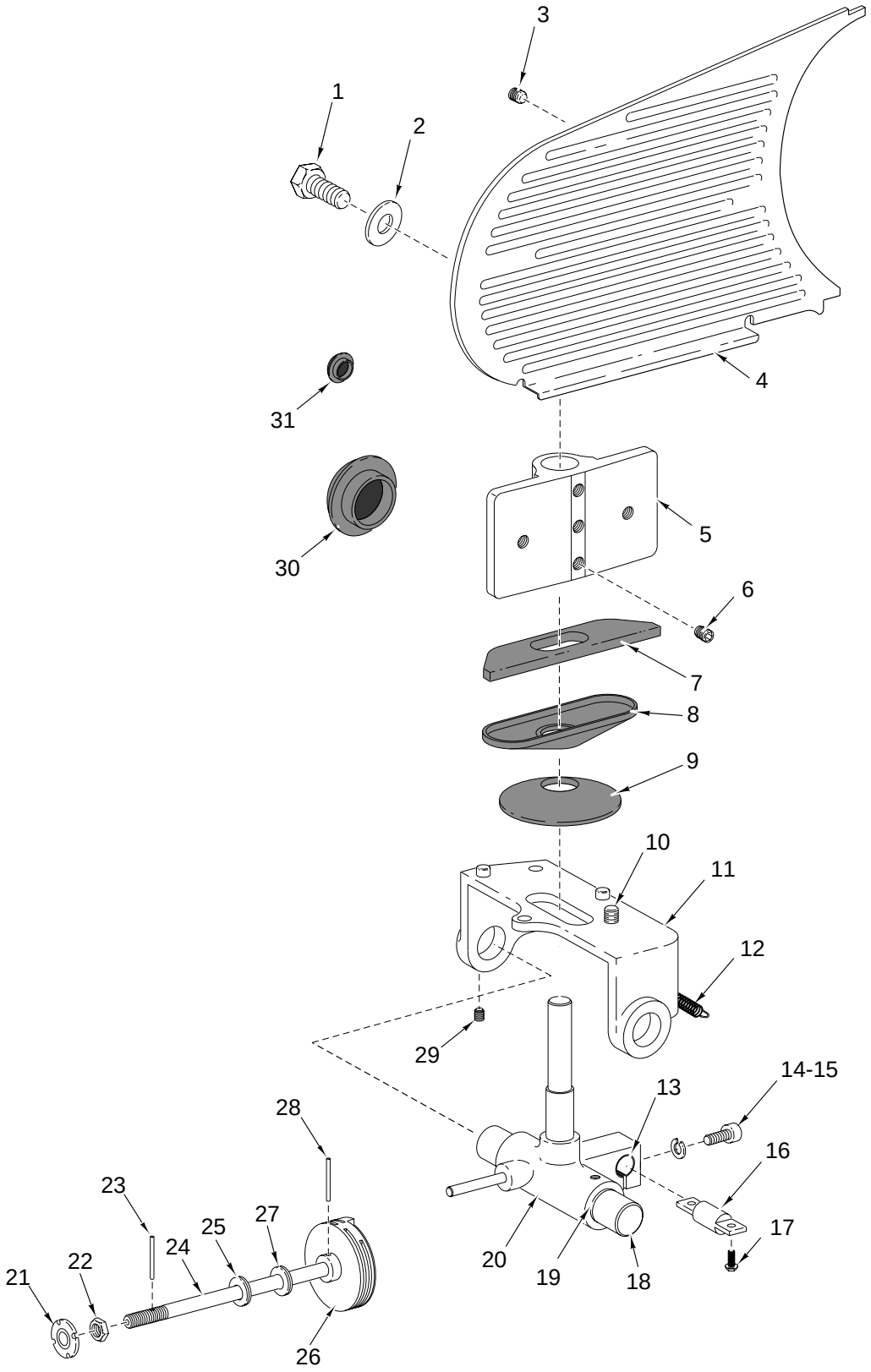

PL-53251

GAUGE PLATE UNIT

GAUGE PLATE UNIT

ILLUS. PL-53251	PART NO.	NAME OF PART	AMT.
1	SC-041-16	Cap Screw 5/16-18 x 1 3/8 Hex Hd. SST	2
2	WS-005-32	Washer	2
3	SC-123-52	Set Screw 5 5/16-24 x 5/8 Hdls., Flat Pt.	4
4	00-438980	Gauge Plate Assy.	1
5	00-439021-00002	Mount - Special	1
6	SC-124-11	Set Screw 5/16-24 x 5/8 Hdls., Cone Pt.	3
7	00-477744	Cover - Gage Plate (Bottom)	1
8	00-477745	Retainer - Cover	1
9	00-439079	Disc - Cover	1
10	SC-037-75	Cap Screw 5/16-18 x 3/4 Hex Hd.	3
11	00-439072-00002	Support - Slide Index	1
12	00-478432	Spring - Index Backlash	1
13	00-478425	Bushing - Antirotation Rod	1
14	SC-124-46	Cap - Screw 10-24 x 3/4 Soc. Hd.	3
15	WL-008-13	Lockwasher 10 Internal Shakeproof	3
16	00-478415	Rod - Index Antirotation	1
17	SD-038-23	Self - Tapping Screw 1/4-20 x 5/8 Hex Washer Hd., Type RL	2
18	00-438886	Rod - Index Slide	1
19	00-478426	Bushing - Index Slide	2
20	00-478416-00002	Slide - Index Mechanism	1
21	00-076948	Disc. - Indexing Drive	1
22	00-010928-00002	Nut - Special	2
23	RP-002-40	Roll Pin 3/32 Dia. x 3/4 Lg.	1
24	00-438890	Cam Shaft	1
25	00-088298	Washer - Belleville	2
26	00-479625	Cam - Indexing	1
27	WS-030-58	Washer	2
28	RP-003-12	Roll Pin 1/8 Dia. x 1 1/4 Lg.	1
29	SC-088-71	Set Screw 8-32 x 3/8 Hdls., Flat Pt.	2
30	00-477753	Plug - Hole (Large)	2
31	00-477754	Plug - Hole (Small)	4

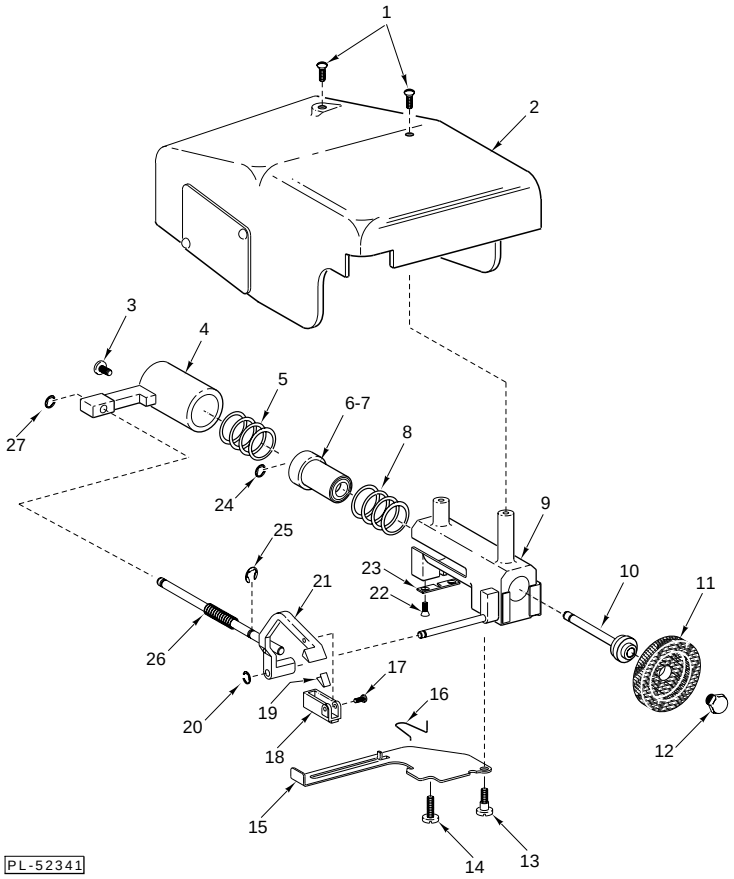

KNIFE SHARPENER UNIT

ILLUS. PL-52341	PART NO.	NAME OF PART	AMT.
1	SC-122-93	Mach. Screw “Special” 10-24 x ½ Phil. Truss Hd.	2
2	00-438459-00001	Plate & Cover Assy.	1
3	SC-122-87	Mach. Screw “Special” 8-32 x ¼ Pan Hd.	1
4	00-437260	Actuator	1
5	00-438430	Spring - Main	1
6	00-438464	Plunger & Ball Bearing Assy. (Incls. item 7)	1
7	BB-021-36	Ball Bearing NSK R4BDD	2
8	00-438437	Spring - Return	1
9	00-438449	Housing & Stud Assy.	1
10	00-438417	Shaft - Grinding Wheel	1
11	00-439691	Stone Service Kit	1
12	00-435814	Retaining Screw (R.H.)	1
13	00-438442	Screw - Shoulder “Special”	1
14	SC-122-87	Mach. Screw “Special” 8-32 x ¼ Pan Hd.	1
15	00-439698	Lever - Locking	1
16	00-438435	Spring “U” (Long end inserted into housing)	1
17	SC-122-84	Mach. Screw “Special” 2-56 x 9/16 Pan Hd.	1
18	00-478747	Stone - Truing	1
19	00-435324	Spring - Truing Stone	2
20	RR-006-22	Retaining Ring	1
21	00-437262	Arm - Truing & Pusher Rod Assy.	1
22	SC-122-85	Mach. Screw “Special” 4-40 x ¼ Flat Hd.	2
23	00-439700	Plate - Rear Locking	1
24	RR-006-22	Retaining Ring	1
25	RR-006-03	Retaining Ring	1
26	00-438426	Spring - Truing Arm	1
27	RR-006-03	Retaining Ring	1
	00-437263-00001	Sharpener Assy.(Incls. items 1 thru 27)	1