INSTRUCTIONS



MODEL 2912B SLICER

MODEL 2912B SLICER

MODEL

2912B ML-134251

ML-134252

Previous models covered by this manual:

2912B ML-134123

HOBART CORPORATION

701 S. RIDGE AVENUE
TROY, OHIO 45374-0001

937 332-3000

www.hobartcorp.com

FORM 34698 Rev. A (Feb. 2004)

Installation, Operation and Care of MODEL 2912B SLICER

SAVE THESE INSTRUCTIONS

GENERAL

The model 2912B slicer is equipped with a 1/2 HP motor and is available for single-phase electrical service. The slicer features the exclusive Hobart Clean Cut™ contoured stainless steel knife with super alloy edge. The slicer is furnished with a cord and plug as standard equipment. The heavy, front-mounted meat grip is standard. The 2912B slicer features automatic slicing with six adjustable speeds.

The **Power Interrupt** feature, standard, requires the slicer to be manually restarted after a power interruption.

The **Gauge Plate and Carriage Interlock** feature, standard, prevents the Carriage Tray from being removed unless the Carriage is in the HOME position (pulled all the way to the front) and the Gauge Plate is closed. Once the Carriage Tray is tilted horizontally or removed, the slicer will not stay on after the switch is pulled and released. Also, the Gauge Plate cannot be opened until the Carriage Tray is returned to its normal operating position.

The **HomeStart** feature, standard, requires the carriage to be in the HOME position before the slicer can be started.

The heavy front meat grip provided on all 2912B models has a solid core and stainless steel support arm to enhance feeding of the product into the knife during slicing. The meat grip's tapered handle makes it easy to lift or move the meat grip to the retaining clip during product loading.

The model 2912B-2 slicer is equipped with the Roast Beef Package which includes the high carriage fence, four 1 5/8" tall rubber feet and a skid plate kit as standard equipment.

A tubular food chute, slaw tray and low carriage fence are other available accessories for model 2912B.

Model 2912B Slicer



© HOBART CORPORATION 1998, 2004

INSTALLATION

UNPACKING

Immediately after unpacking the slicer, check for possible shipping damage. If the slicer is found to be damaged, save the packaging material and contact the carrier within 15 days of delivery.

Prior to installing the slicer, test the electrical service to make sure that it agrees with the specifications on the machine data plate. The data plate is located on the right side of the slicer base.

CARRIAGE TRAY

Assemble the Carriage Tray Support Arm to the slicer by inserting the Key in the Carriage Pivot (Fig. 7); turn the Knob on the Carriage Tray Support Arm (Fig. 3) clockwise until tight. Refer to page 7 for assembly information.

SHARPENER

The Sharpener should already be mounted on top of the slicer and locked to its bracket (Fig. 1).

TOP KNIFE COVER

The Top Knife Cover should already be in place and secured with its Latch Knob (Fig. 2).

DEFLECTOR

The Deflector (Fig. 1) should already be mounted below the Knife.

FENCE (Low or High)

The Fence (Fig. 1) can be clamped on the Carriage Tray to limit product movement during slicing.

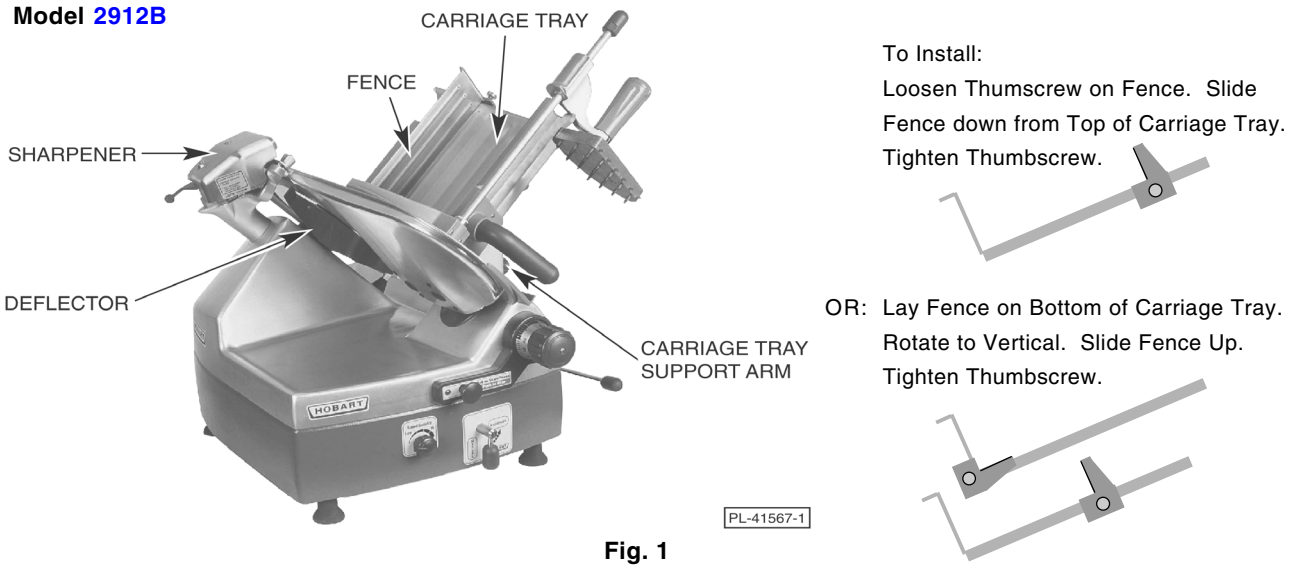

Fig. 1

ELECTRICAL

WARNING: THIS MACHINE IS PROVIDED WITH A THREE-PRONG GROUNDING PLUG. THE OUTLET TO WHICH THIS PLUG IS CONNECTED MUST BE PROPERLY GROUNDED. IF THE RECEPTACLE IS NOT THE PROPER GROUNDING TYPE, CONTACT AN ELECTRICIAN.

CLEAN BEFORE USING

Thoroughly clean and sanitize the slicer after installation and before use. Refer to CLEANING, pages 6 – 7.

OPERATION

SAFETY

SAFETY DEVICES INCORPORATED IN THIS SLICER MUST BE IN THEIR CORRECT OPERATING POSITIONS ANY TIME THE SLICER IS IN USE.

The Top Knife Cover (Fig. 2) must be in position and secured with the Latch Knob (Fig. 2). The Ring Guard is not removable. The Deflector (Fig. 1), mounted below the slicer knife, can be removed for cleaning.

The Meat Grip (Fig. 2) must be used when slicing short ends to keep your hand(s) away from the knife.

When the slicer is not running, the Index Knob (Fig. 2) must be turned below zero (fully clockwise). The Gauge Plate will then cover the knife edge.

Always UNPLUG the Power Cord before cleaning or moving the slicer.

Model 2912B

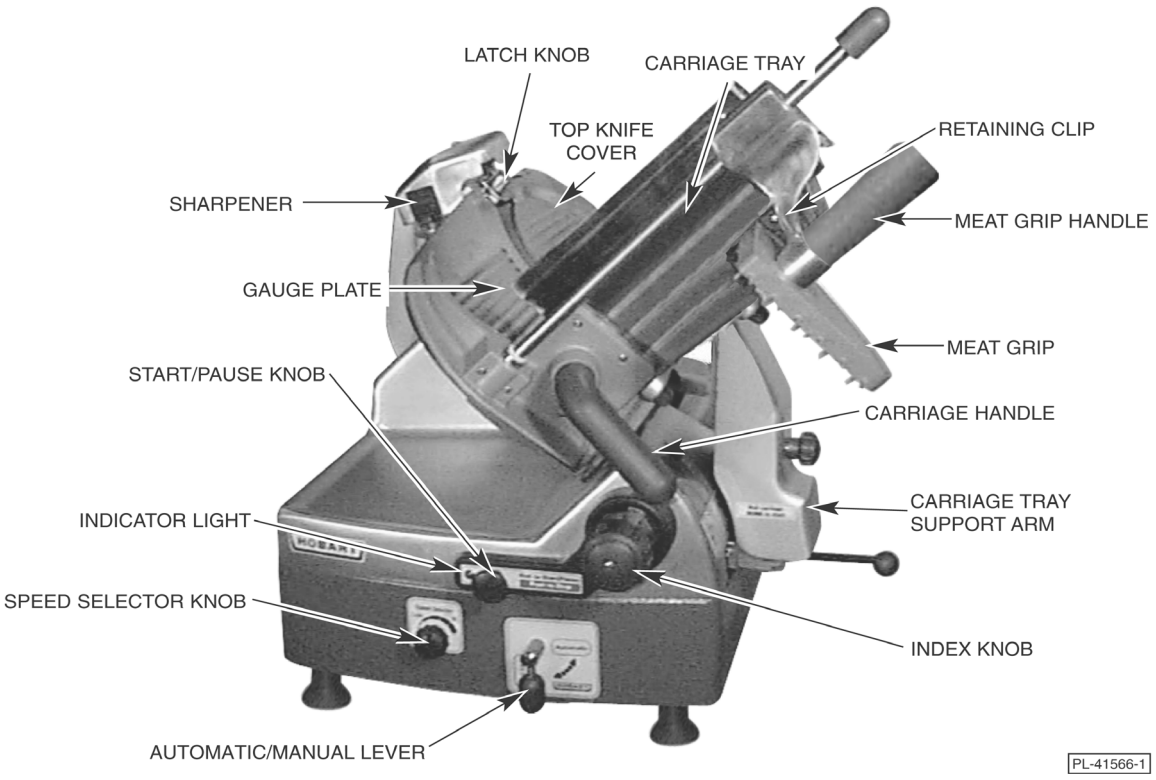

Fig. 2

WARNING: ROTATING KNIFE. USE FEED GRIP. UNPLUG MACHINE POWER CORD BEFORE CLEANING, SERVICING, OR REMOVING PARTS. REPLACE PARTS BEFORE USE.

SLICING — MODEL 2912B

Loading the Product

With the Gauge Plate fully closed and the Automatic/Manual Lever (Fig. 2) in the Manual position (down), pull the carriage all the way toward the operator end of the machine (Home position).

With the Meat Grip out of the way, place the product to be sliced on the Carriage Tray.

To adjust the Fence: Loosen the thumbscrew (Fig. 1); slide the Fence so it is close to the product but not pushing against it; retighten the thumbscrew.

Set the Meat Grip against the product. The Meat Grip should be used when slicing. If using the optional food chute, the Meat Grip is not needed. It may be stored out of the way by sliding it to the top of its travel, rotating it under the Carriage Tray and allowing it to rest in the Retaining Clip (Fig. 2).

Manual Slicing

Adjust the Gauge Plate by turning the Index Knob (Fig. 2) to obtain the desired slice thickness. The numbers on the Index Knob do not indicate actual measurements but may be used for reference to duplicate slice thickness. Make sure the carriage is all the way toward the operator (Home position).

Turn the slicer on by pulling the Start/Pause Knob (Fig. 2) until the slicer starts, and then release the knob. The Indicator Light is lit. If the Gauge Plate is not open before the Start/Pause Knob is pulled, the slicer will not continue to run when the Start/Pause Knob is released.

Use the Carriage Handle (Fig. 2) to move the carriage back and forth to slice manually.

To turn the slicer off, either push the Start/Pause Knob or close the Gauge Plate.

Automatic Slicing

Load the product as described above.

Turn the Speed Selector Knob (Fig. 2) to the desired speed. The speed can be adjusted to any of the six speeds at any time.

Adjust the Gauge Plate by turning the Index Knob to obtain the desired thickness. Make sure the carriage is all the way toward the operator (Home position).

Rotate the Automatic/Manual Lever to the Automatic position.

- To Start slicing — pull the Start/Pause Knob (Fig. 2) until the slicer starts, and then release it. The slicer knife motor and carriage drive unit will start, and the Indicator Light beside the Start/Pause Knob is lit. If the Gauge Plate is not open before the Start/Pause Knob is pulled, the slicer will not continue to run when the Start/Pause Knob is released.
- To Pause — pull the Start/Pause Knob (Fig. 2) again, and then release it. The carriage will complete its cycle, returning to the Home position, and the slicer knife will stop. The Indicator Light goes off.
- To Resume slicing — pull the Start/Pause Knob (Fig. 2) again, and then release it.
- To Stop the slicer — push the Start/Pause Knob.

To restart the slicer, it may be necessary to move the Automatic/Manual Lever to Manual (down), pull the carriage tray all the way toward the operator (Home position), place the Automatic/Manual Lever in Automatic (Up) and pull the Start/Pause Knob.

To use the optional food chute, place the Meat Grip on the Retaining Clip, fit the hangers on the food chute around the meat grip slide rod (at front) and lower the food chute onto the Carriage Tray.

CLEANING

This machine must be thoroughly cleaned and sanitized after each day's operation or after being idle for an extended period of time.

WARNING: THE SLICER KNIFE IS VERY SHARP. EXERCISE EXTREME CAUTION WHEN WORKING NEAR THE KNIFE.

WARNING: DISCONNECT THE ELECTRICAL POWER TO THE MACHINE AND FOLLOW LOCKOUT / TAGOUT PROCEDURES.

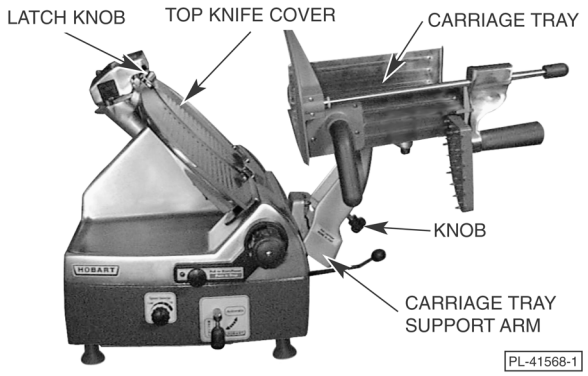

Fig. 3

Use a clean cloth soaked in a solution of mild detergent and warm water to wipe all surfaces of the machine. Rinse using a fresh cloth and clean water. Use only products formulated to be safe on stainless steel and aluminum.

To clean the Carriage Tray, close the Gauge Plate and pull the Carriage all the way toward the operator. Unscrew the Knob on the Carriage Tray Support Arm (Fig. 3). Tilt the Carriage Tray to the right until almost horizontal (Fig. 3). The Carriage Tray Support Arm can be cleaned while in this horizontal position, or it can be removed by grasping with both hands and lifting straight up. Once removed, the Carriage Tray Support Arm can be cleaned in a sink.

To re-assemble the Carriage Tray Support Arm, refer to page 7.

Remove the Top Knife Cover by rotating the Latch Knob (Fig. 3) counterclockwise and lifting it free of the guide pins. Remove the Deflector (Fig. 1) from its mount below the slicer knife by rotating it outward, away from the knife. Clean both Top Knife Cover and Deflector with warm soapy water in a sink. Rinse with clean water.

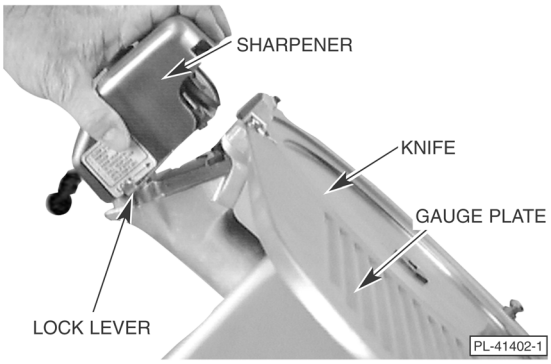

Fig. 4

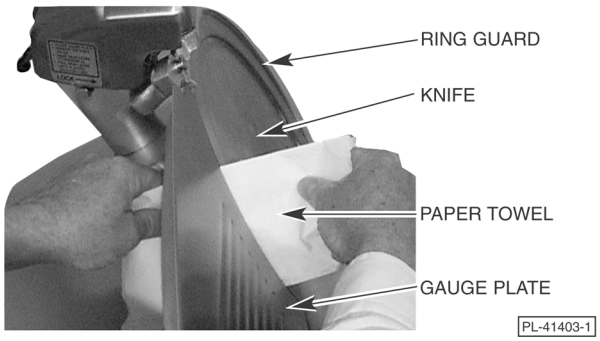

Fig. 5

Remove the Sharpener by pushing the Lock Lever to the left (Fig. 4). Tilt the right side up, clearing the right guide pin, then lift the Sharpener up, clearing the left guide pin. Wipe out any residue remaining inside the sharpener housing and clean the Sharpener in a sink. Do not soak. Rinse with fresh water.

Clean completely around the Ring Guard by working a moistened, folded paper towel between the Ring Guard and Knife. Insert the towel at the base of the Ring Guard. Manually rotating the knife will allow the towel to wipe the Ring Guard and the edge of the Gauge Plate as it follows the knife (Fig. 5).

Wash and rinse both sides of the knife by wiping outward from the center. Use a mild detergent or sanitizer solution only. Never clean any part of the slicer with steel pads.

Do not exceed chemical manufacturer's recommended concentrations for detergent or sanitizer. Do not exceed 200 parts per million concentration of available chlorine. For example, mixing 1 tablespoon of 5.25% sodium hypochlorite bleach with 1 gallon of water yields a solution containing 200 ppm of available chlorine. Solution with concentration greater than 200 ppm will accelerate corrosion of metals. Maximum exposure to sanitation solution varies with temperature and concentration. Rinse with clean water.

Reassemble the Sharpener to the mounting bracket by sliding the left slot on the Sharpener over the left guide pin on the bracket while tilting slightly (Fig. 6). Then, press down on the right side of the Sharpener so the locking hole fits over the right guide pin on the bracket. Slide the Lock Lever to the right to lock the Sharpener in position. Make sure the Sharpener is securely engaged to the pins on the bracket.

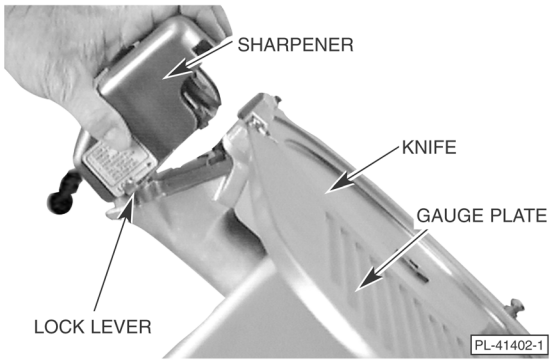

Fig. 6

Carefully reassemble the Top Knife Cover by putting it in position (three guide pins). Lock by turning the Latch Knob counterclockwise while lowering the Top Knife Cover; then release the Latch Knob and turn it clockwise until snug.

Replace the Deflector below the slicer knife: Guide bottom of socket onto mount and rotate inward, towards the knife.

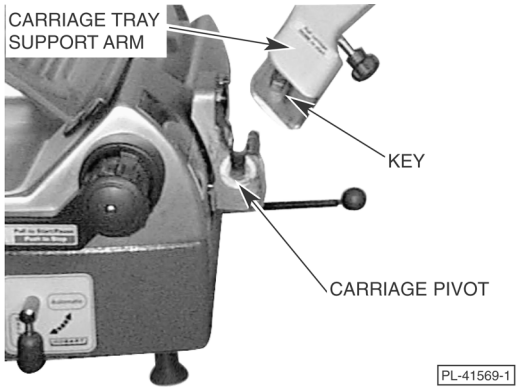

Fig. 7

NOTE: The last three digits of the slicer serial number are etched on the Key (Fig. 7). Make sure the Carriage Tray Support Arm stays with its own slicer, otherwise proper clearances may not be maintained.

To reinstall the Carriage Tray Support Arm: Hold it with both hands and lower it so the Key at the bottom of the Support Arm fits into the slot of the Carriage Pivot (Fig. 7). The Carriage Tray should rest almost horizontal (Fig. 3). Return the Carriage Tray to the Gauge Plate by tilting to the left. Turn the Knob on the Carriage Tray Support Arm clockwise until tight.

To clean underneath the model 2912B slicer, raise the Lift Lever past center to its stop (Fig. 8). After cleaning, return the slicer to its normal position by slowly retracting the Lift Lever.

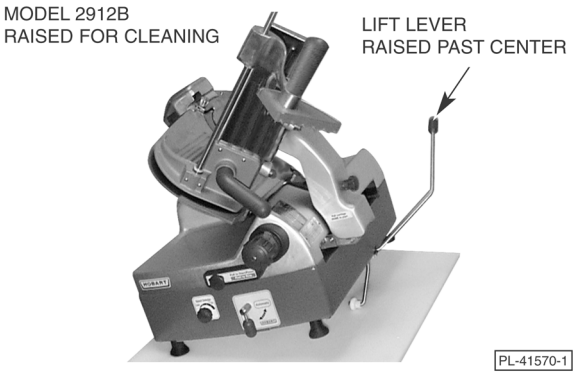

Fig. 8

DO NOT wash any slicer components in a dishwasher. DO NOT immerse slicer base or motor in water.

If using a chlorinated sanitizing solution, dilute per manufacturer's guidelines. Rinse with fresh water.

NOTE: Failure to follow use, care and maintenance instructions may void your Hobart warranty.

MAINTENANCE

KNIFE SHARPENING

The Hobart Clean Cut™ knife will provide long service in normal food retail or commercial kitchen use. However, in high volume applications where it is a practice to sharpen the knife frequently, the knife will be expended in a shorter time.

Sharpen only when necessary, usually when slice quality starts to degrade; prolonged or too frequent sharpening results in unnecessary knife wear.

WARNING: DISCONNECT THE ELECTRICAL POWER TO THE MACHINE AND FOLLOW LOCKOUT / TAGOUT PROCEDURES.

Turn the Index Knob fully clockwise to close the Gauge Plate. Remove the Top Knife Cover by rotating the Latch Knob counterclockwise and lifting it off the slicer. Thoroughly wash the area around the knife, the exposed knife surfaces and the knife edge. Fat from meat or cheese should not be allowed to transfer from the knife to the Sharpener.

Plug in machine power cord. With the carriage tray pulled all the way toward the operator end of the machine, start the slicer with your right hand by pulling the Start/Pause Knob until the slicer starts and hold it out (do not release it). Pull the Sharpener Handle fully toward the operator for 5 seconds (Fig. 9). Slowly release the Sharpener Handle. Push the Start/Pause Knob to turn the slicer off. If necessary, repeat sharpening for another 5 seconds.

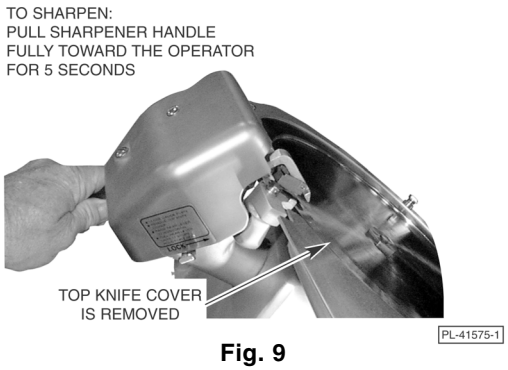

Fig. 9

Unplug machine power cord. Wipe the slicer with a clean damp cloth to remove any grinding particles. Replace the Top Knife Cover.

LUBRICATION — Carriage Slide Rod and Sharpener

Use only Lubriplate FMO-200-AW food-safe lubricant, supplied with the slicer. To apply oil, pull out the telescoping tube on the oil bottle, aim the tube and squeeze gently on the sides of the bottle. Apply 5 drops every month (depending on usage) in the Wick Hole on the Carriage Transport; or, apply 5 drops directly on the Carriage Slide Rod on each side of the Carriage Transport (Fig.10) once each month. After applying the oil, move the Carriage Tray back and forth so the oil spreads over the entire length of the slide rod. Also, apply 1 drop on both slots of the sharpener plunger and on the sharpener shaft (Fig. 11).

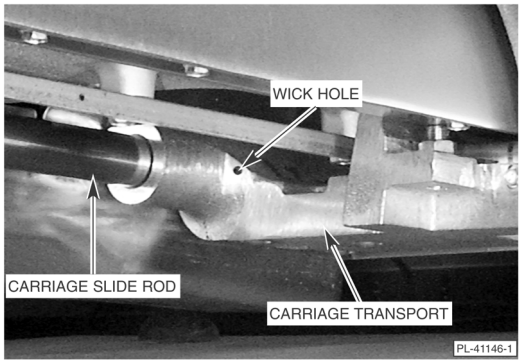

Fig. 10

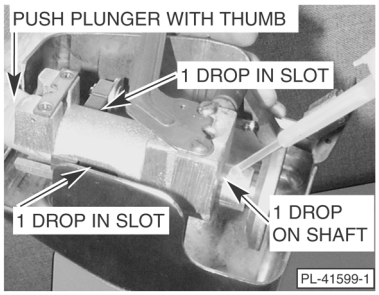

Fig. 11

OVERLOAD RESET BUTTON — MODEL 2912B

Push the reset button underneath the slicer near the right-front foot if the carriage motor overloads.

SERVICE

Contact your local Hobart-authorized service office for any repairs or adjustments needed on this equipment.