INSTRUCTIONS

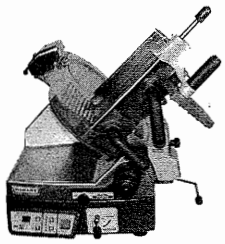

2912SC SLICER

MODEL 2912SC SLICER

MODEL

2912SC ML-104965

Previous models covered by this manual:

2912SC ML-104832

HOBART
CORPORATION

701 S. RIDGE AVENUE
TROY, OHIO 45374-0001

937 332-3000

www.hobartcorp.com

FORM 34457 (Feb. 2000)

Model 2912SC Slicer



Model 2912SC Slicer with Option Group

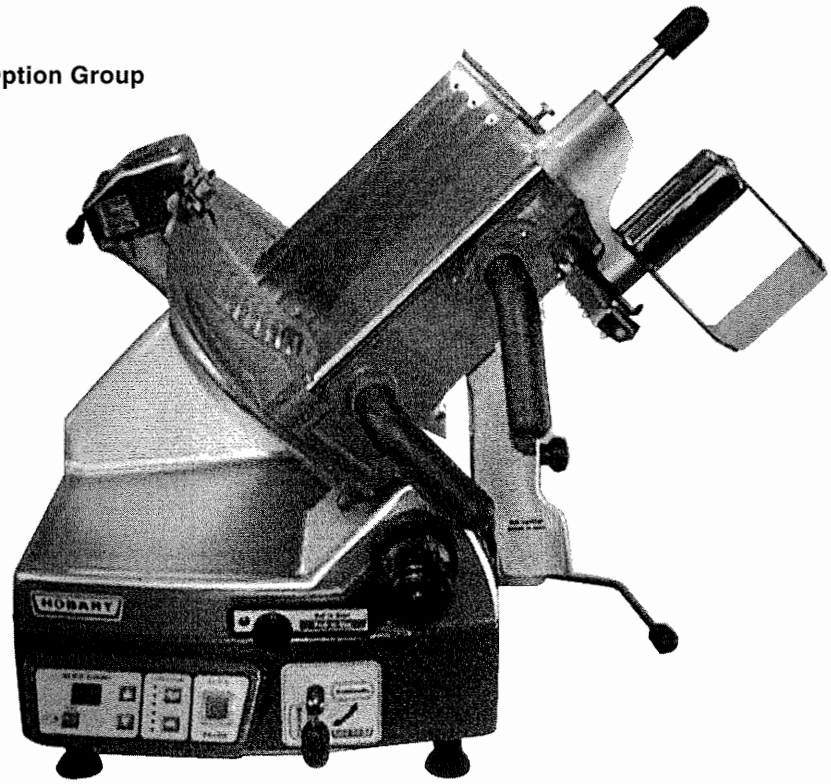

© HOBART CORPORATION 1998, 1999

Installation, Operation, and Care of MODEL 2912SC SLICER

SAVE THESE INSTRUCTIONS

GENERAL

The model 2912SC slicers are equipped with a ½ HP motor and are available for single-phase electrical service. The slicer features the exclusive Hobart Stay-Sharp contoured cast solid stainless steel knife. The slicer is furnished with a cord and plug as standard equipment. The 2912SC slicer features automatic slicing with six adjustable speeds. Other features and options include:

The **Power Interrupt** feature, standard, requires the slicer to be manually re-started after a power interruption.

The **Gauge Plate and Carriage Interlock** feature, standard, prevents the Carriage Tray from being removed unless the Carriage is in the HOME position (pulled all the way to the front) and the Gauge Plate is CLOSED. When the Carriage Tray is tilted horizontally, the slicer will turn OFF if it has not previously been turned OFF. Once the Carriage Tray is tilted horizontally or removed, the slicer cannot be started and the Gauge Plate cannot be opened until the Carriage Tray is returned to its normal operating position.

The **HomeStart** feature, standard, requires the carriage to be in the HOME position before the slicer can be started.

The **AutoShutoff** feature, provided on all 2912SC slicers, is turned off at the factory but can be enabled or disabled by pressing the down arrow key while pulling the switch knob all the way forward with the lever on manual. If AutoShutoff is enabled, the slicer will turn off if a keystroke or full stroke of the carriage has not been made within a 10 second interval while in Manual mode.

The 2912SC slicer's slice counter can be set to any value from 1 to 99. It Counts Down as each slice is made, stopping at zero. The slice counter setting is retained in memory for repeat applications. If the slice counter begins on zero, the slices Count Up — until slicing is stopped by the operator.

A tubular food chute, and a 4" leg set are available accessories for 2912SC. The low carriage fence is standard on 2912SC. A high carriage fence is an accessory used with front mounted meat grips. The standard meat grip is front-mounted. Heavy front-mounted meat grip is an available accessory.

Many model 2912SC slicers equipped for sandwich shoppe use are provided with an option group which includes the high carriage fence, heavy front-mounted Meat Grip with swing handle (873249), a set of four 1⅝" tall rubber feet, and a Skid Plate Kit (478689).

When all Automatic Mode requirements are met, you can press the Slice / Pause button to either start or resume automatic slicing or to stop slicing and return to the Home position. Refer to pages 6 – 8 for details.

INSTALLATION

UNPACKING

Immediately after unpacking the slicer, check for possible shipping damage. If the slicer is found to be damaged, save the packaging material and contact the carrier within 15 days of delivery.

Prior to installing the slicer, test the electrical service to assure it agrees with the specifications on the machine data plate. The data plate is located on the right side of the slicer base.

TALL FEET (when provided)

Remove the short rubber feet used for shipping and install the four 1⅝" tall rubber feet in their place.

CARRIAGE TRAY

The Carriage Tray is secured to the slicer when the knob on the Carriage Tray / Support Arm is turned clockwise until snug (Fig. 1). Refer to page 10 for assembly information.

SHARPENER

The Sharpener should already be mounted on top of the slicer and locked to its bracket (Fig. 1).

TOP KNIFE COVER

The Top Knife Cover should already be in place and secured with its Latch Knob (Fig. 1).

DEFLECTOR

The Deflector should already be mounted below the knife (Fig. 1).

FENCE (Low and High Fences are used with front-mounted meat grip only.)

Either Fence (Fig. 1) can be clamped on the Carriage Tray to limit product movement during slicing.

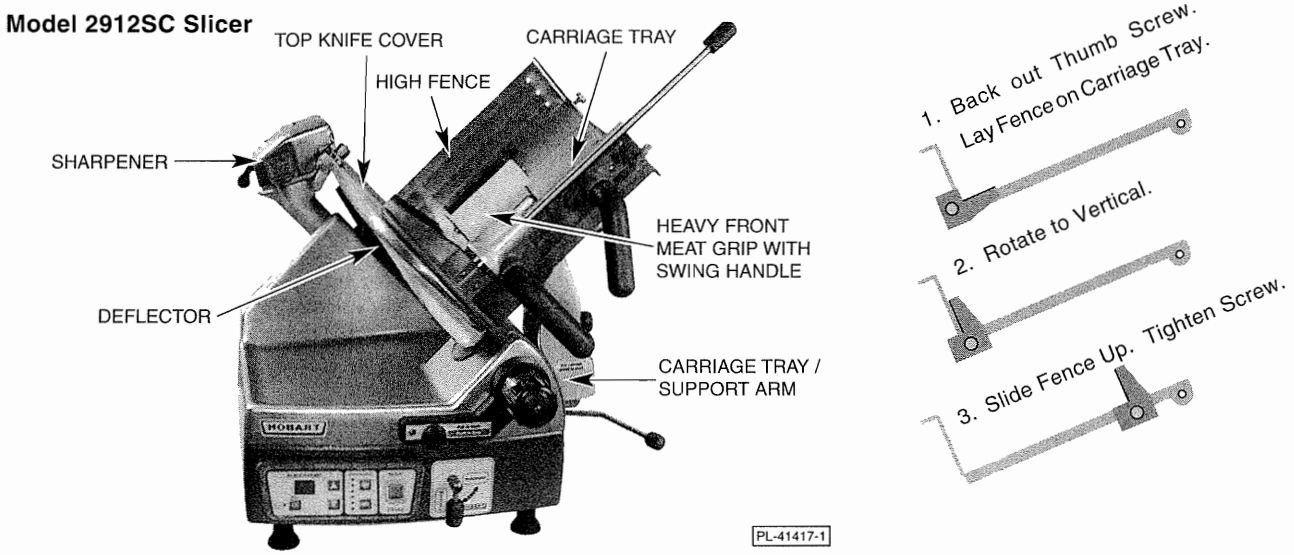

Fig. 1

ELECTRICAL

WARNING: THIS MACHINE IS PROVIDED WITH A THREE-PRONG GROUNDING PLUG. THE OUTLET TO WHICH THIS PLUG IS CONNECTED MUST BE PROPERLY GROUNDED. IF THE RECEPTACLE IS NOT THE PROPER GROUNDING TYPE, CONTACT AN ELECTRICIAN.

CLEAN BEFORE USING

The 2912SC slicer must be thoroughly cleaned and sanitized after installation and before being used. Refer to Cleaning, page 9.

OPERATION

SAFETY

SAFETY DEVICES INCORPORATED IN THIS SLICER MUST BE IN THEIR CORRECT OPERATING POSITIONS ANYTIME THE SLICER IS IN USE.

The TOP KNIFE COVER must be in position and secured with the LATCH KNOB (Fig. 2). The RING GUARD is not removable. The DEFLECTOR, mounted below the slicer knife, can be removed for cleaning.

The MEAT GRIP (Fig. 2) must be used when slicing short ends to keep your hand(s) away from the knife.

When the slicer is not running, the INDEX KNOB (Fig. 2) must be turned back below zero (fully clockwise). The GAUGE PLATE will then cover the knife edge.

Always UNPLUG the POWER CORD before cleaning or moving the Slicer.

WARNING: ROTATING KNIFE. USE FEED GRIP. UNPLUG MACHINE POWER CORD BEFORE CLEANING, SERVICING, OR REMOVING PARTS. REPLACE PARTS BEFORE USE.

Model 2912SC Slicer

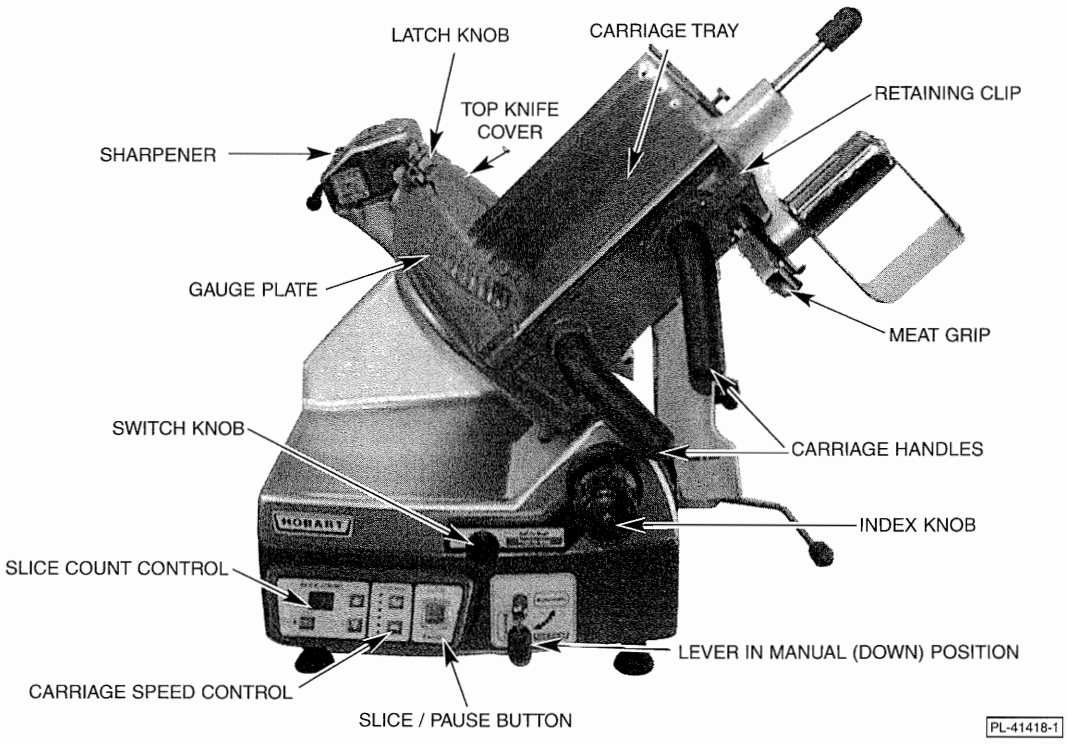

Fig. 2

KEYPAD (Fig. 3)

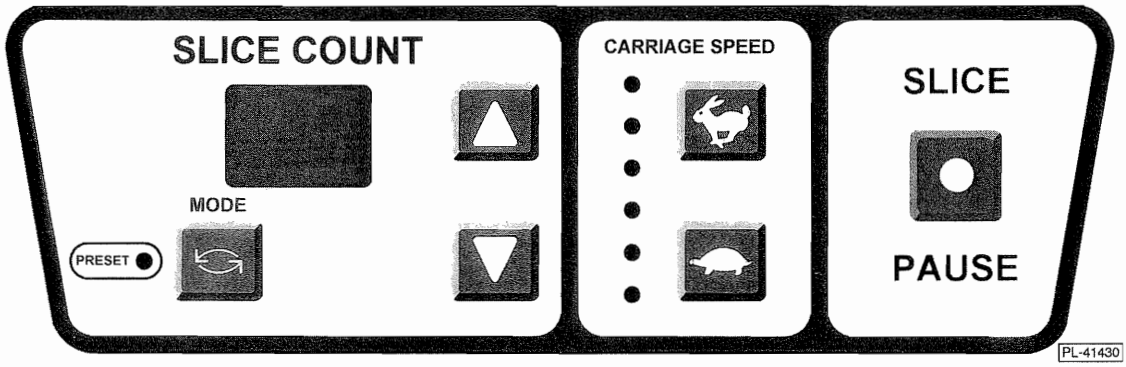

Fig. 3



— Selects the Mode: PRESET lit or PRESET not lit.



— Up arrow increases the Slice Count by 1 in operator or program modes or advances through the six programmed preset values when Preset is on.



— Down arrow decreases the Slice Count by 1 in operator or program modes or advances through the six programmed preset values when Preset is on.

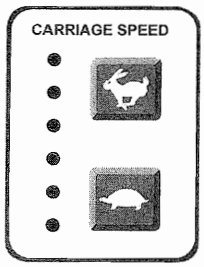

— Hare increases the Carriage Speed by one level. The Carriage Speed is indicated by the number of lights.

— Tortoise decreases the Carriage Speed by one level. The Carriage Speed is indicated by the number of lights.

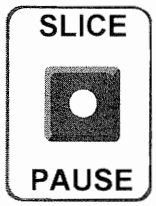

— Slice / Pause button starts the Knife and Carriage motors when in Automatic Mode only. If Slice / Pause is pressed while running, the Carriage returns to Home and stops. If Slice / Pause is pressed after an interruption, slicing restarts. Press Slice / Pause button with your thumb.



— Short tone for a valid key.
Long tone for an invalid key.
Two short tones, enter Program Mode.

PRESET VALUES — SLICE COUNT

Six preset values for Preset mode are available. The preset values provided at the factory are shown in the table below. Other values can be programmed in place of these values by following the Programming instructions in the next section.

FACTORY PRESET VALUES — SLICE COUNT

PRESET MODE	Preset 1	Preset 2	Preset 3	Preset 4	Preset 5	Preset 6
SLICE COUNT	4	6	8	10	15	20

PROGRAMMING

To enter Program Mode with slicer controls lit and lever on Automatic: Hold down the Mode key for 6 seconds until 2 beeps sound and [Pr] displays for 2 seconds. Release the Mode key. The blinking PRESET indicates Program Mode. The CARRIAGE SPEED light(s) show which Preset value is displayed (1 – 6). Do not interrupt power during programming.

1. Press the Up and Down arrow keys to increase or decrease the Preset value.
2. Press Hare or Tortoise keys to access any Preset value (1 – 6), as indicated by the speed lights.

Repeat steps 1 and 2 to review or change any of the 6 Preset values. When all Preset values are programmed as desired, press the Mode key for 2 seconds to Save and Exit. A beep sounds. [If 0 is programmed as a Preset value, the slicer will Count Up until slicing is stopped by the operator.]

KEYBOARD AND DISPLAY ACTIVATION

Manual Mode — With the Lever on Manual (pointing down) the keyboard display and the slicer knife motor are either both on or both off. The display and slicer knife motor will go off if the Switch Knob is pushed or if the AutoShutoff feature (when enabled) senses inactivity for a 10 second interval.

Automatic Mode — With the Lever on Automatic (pointing to the right) the keyboard display remains on only if the Switch Knob is on, the gauge plate is open, and the carriage is either at Home position or in motion during slicing.

SLICING WITH PRESETS

Using a Preset or Entered Value in Preset Slice Count Mode

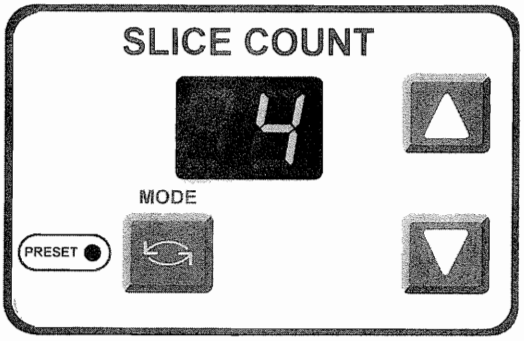

If you press the Mode key until Preset is lit: Select a 'Slice Count' from the six Preset values using the keys.

If Preset is not lit: Select a 'Slice Count' using the keys.

The Preset light is lit and the slice counter is ready to count down to zero. With the lever on Automatic and the gauge plate set, press [Slice / Pause] to begin Automatic slicing. After the counter counts down to zero, the slicer returns to Home position and shuts off.

SLICING — MODEL 2912SC

With the Gauge Plate fully closed, pull the Carriage all the way toward you until it reaches its stop. With the Meat Grip out of the way, place the product to be sliced on the Carriage Tray. Adjust the fence by loosening the thumb screw and sliding the fence so that it is close to the product but not pushing against it. Tighten the thumb screw. Set the Meat Grip against the product. To operate the slicer in manual mode, place the Lever (Fig. 2) in Manual position (pointing down) before starting the slicer.

If the Meat Grip is not needed, it may be stored out of the way by sliding it to the top of its travel, rotating it under the Carriage Tray, and allowing it to rest in the Retaining Clip (Fig. 2).

Adjust the Gauge Plate by turning the Index Knob (Fig. 2) to obtain the desired slice thickness. The numbers on the Index Knob do not indicate actual measurements but may be used for reference to duplicate slice thickness. With the Carriage in the HOME position, turn the slicer on by pulling the Switch Knob (Fig. 2) forward until it starts and then releasing it. Unless the Gauge Plate is opened before pulling the Switch Knob on, the slicer will not continue to run when the Switch Knob is released.

Use either Carriage Tray Handle (Fig. 2) to push the Carriage back and forth to slice manually.

In Manual Mode, turn the slicer off by pushing the Switch Knob or by closing the Gauge Plate.

To operate the slicer in Automatic mode . . . With the Carriage in HOME position (all the way forward), the Lever on the Automatic position (pointing to the right), the Gauge Plate adjusted to the desired slice thickness, and the slicer Switch Knob pulled on, the slicer is ready to begin Automatic slicing.

Select the desired Carriage Speed by using the Hare button to increase Carriage Speed and / or Tortoise button to decrease Carriage Speed. The Carriage Speed indicator lights will show the Carriage Speed selected (1 to 6). The speed can be adjusted at any time.

Select the desired Slice Count and Mode. One Mode available from pressing the Mode key allows you to select from only six Preset values using the Up and Down arrow keys. The Factory Preset values of [4], [6], [8], [10], [15], or [20] can be changed per Programming, page 7. An alternate Mode available from pressing the Mode key begins with the Slice Count at [0] and allows you to select from 1 to 99 using the Up and Down arrow keys. If the Slice Count is [0] when you begin automatic slicing, the slicer Counts Up as each slice is made until slicing is stopped by the operator (after counting from 1 to 99, the slicer begins again at 0). If the Slice Count is on any value from 1 to 99 and the Preset indicator light is lit when you begin automatic slicing, the slicer Counts Down one as each slice is made and stops at Home position when zero is reached.

To start the carriage drive unit, press the Slice / Pause button with your thumb to begin slicing. The slicer returns to Home position at completion of a Preset cycle or at completion of a slice after the Slice / Pause button is pushed. A Preset cycle can resume by pushing Slice / Pause again. The drive unit can also be stopped by rotating the Lever down and to the left to the Manual position. The slicer can be stopped by pushing the Switch Knob or by closing the Gauge Plate.

To use the optional Food Chute, place the Meat Grip on the Retaining Clip, fit the hangers on the Food Chute around the meat grip slide rod (at front), and lower the Food Chute onto the Carriage Tray.

CLEANING

This machine must be thoroughly cleaned and sanitized after each day's operation or after being idle for an extended period of time.

WARNING: THE SLICER KNIFE IS VERY SHARP. EXERCISE EXTREME CAUTION WHEN WORKING NEAR THE KNIFE.

WARNING: UNPLUG MACHINE POWER CORD AND TURN THE INDEX KNOB FULLY CLOCKWISE BEFORE CLEANING THE SLICER.

Use a clean cloth soaked in mild detergent and warm water to wipe all surfaces of the machine. Rinse using a fresh cloth and clean water. Use only products formulated to be safe on stainless steel or aluminum.

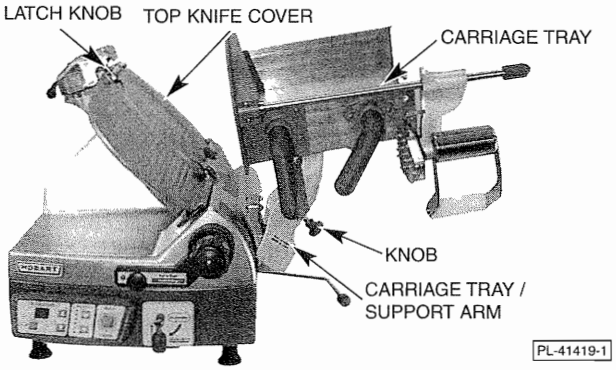

Fig. 4

To clean the Carriage Tray, close the gauge plate and pull the Carriage all the way to the front. Unscrew the Knob on the Carriage Tray / Support Arm (Fig. 4). Tilt the Carriage Tray / Support Arm to the right until almost horizontal (Fig. 4). The Carriage Tray / Support Arm can be cleaned while in this horizontal position, or it can be removed by grasping with both hands and lifting straight up. Once removed, the Carriage Tray / Support Arm can be cleaned in a sink. **NOTE**: The last three digits of the slicer serial number are etched on the Key (Fig. 8) so you can make sure the Carriage Tray stays with its own slicer.

Remove the Top Knife Cover by rotating the Latch Knob (Fig. 4) counterclockwise and lifting it free of the guide pins. Remove the Deflector (Fig. 1) from its mount below the slicer knife by rotating downward. Clean both Top Knife Cover and Deflector with warm soapy water in a sink. Rinse with clean water.

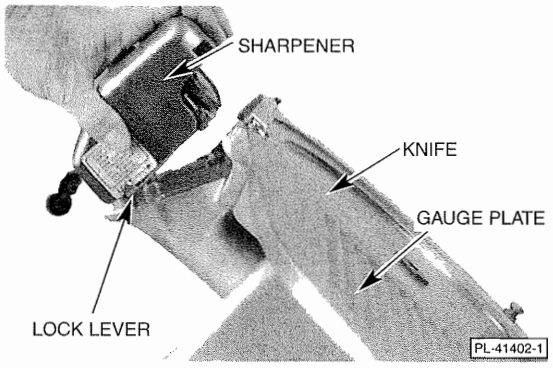

Fig. 5

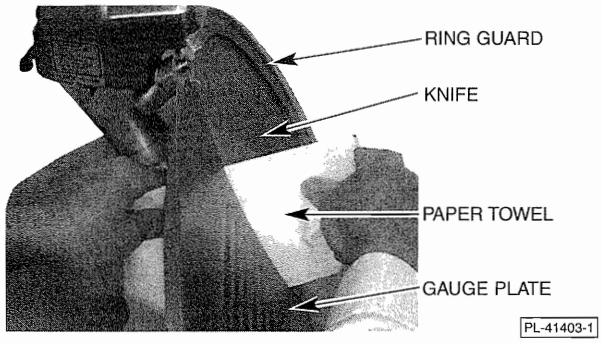

Fig. 6

Remove the sharpener by pushing the Lock Lever to the left (Fig. 5). Tilt the right side up, clearing the right guide pin, then lift the sharpener up, clearing the left guide pin. Wipe out any residue remaining inside the sharpener housing and clean the sharpener in a sink. Rinse with fresh water.

Clean completely around the Ring Guard by working a moistened, folded paper towel between the Ring Guard and Knife. Insert the towel at the base of the Ring Guard. Manually rotate the knife and the towel will wipe the Ring Guard and the edge of the Gauge Plate as it follows the knife (Fig. 6).

Wash and rinse both sides of the knife by wiping outward from the center. Use a mild detergent or sanitizer solution only. Never clean any part of the slicer with steel pads.

Do not exceed chemical manufacturer's recommended concentrations for detergent or sanitizer. Do not exceed 200 parts per million concentration of available chlorine. For example, mixing 1 tablespoon of 5.25% sodium hypochlorite bleach with 1 gallon of water yields a solution containing 200 ppm of available chlorine. Solution with concentrations greater than 200 ppm will accelerate corrosion of metals. Maximum exposure to sanitation solution varies with temperature and concentration. Rinse with clean water.

Reassemble the sharpener to the mounting bracket by sliding the left slot on the sharpener over the left guide pin on the bracket while tilting slightly (Fig. 7). Then, press down on the right side of the sharpener so the locking hole fits over the right guide pin on the bracket. Slide the Lock Lever to the right to lock the sharpener in position. Make sure the sharpener is securely engaged to the pins on the bracket.

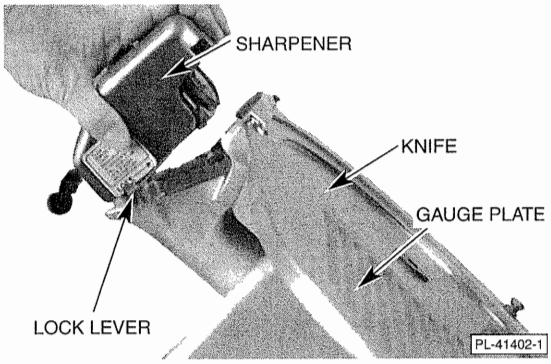

Fig. 7

Carefully reassemble the Top Knife Cover by putting it in position (three guide pins). Lock by turning the Latch Knob to the left while lowering the Top Knife Cover; then, release the Latch Knob and turn it to the right until snug.

Replace the Deflector below the slicer knife: Guide bottom of socket onto mount and rotate upwards.

Make sure the digits etched on the Key (Fig. 8) match the last three digits of the slicer serial number. To reinstall the Carriage Tray / Support Arm: Hold it with both hands and lower it so the Key at the bottom of the Support Arm fits into the slot of the Carriage Pivot (Fig. 8). The Carriage Tray should rest almost horizontal (Fig. 4). Return the Carriage Tray to the Gauge Plate by tilting to the left. Turn the Knob on the Carriage Tray / Support Arm clockwise until snug.

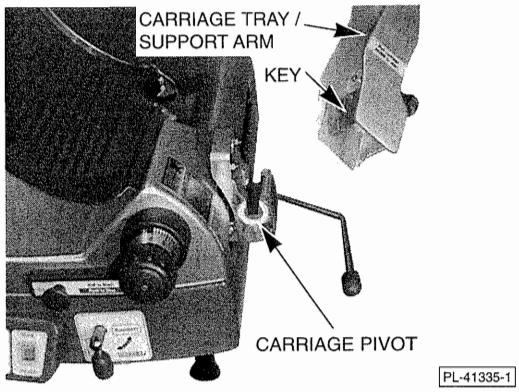

Fig. 8

To clean under the model 2912SC slicer, raise the Lift Lever past center to its stop (Fig. 9). After cleaning, return the slicer to its normal position by slowly retracting the Lift Lever.

DO NOT wash any slicer components in a dishwasher. DO NOT immerse slicer base or motor in water.

If using a chlorinated sanitizing solution, dilute per manufacturer's guidelines. Rinse with fresh water.

NOTE: Failure to follow use, care, and maintenance instructions may void your Hobart warranty.

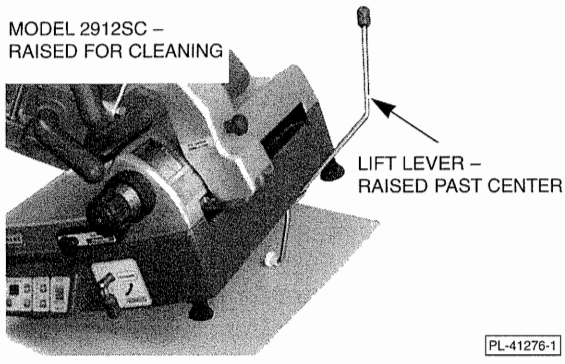

Fig. 9

MAINTENANCE

KNIFE SHARPENING

The Hobart cast stainless steel knife will provide long service in normal food retail or commercial kitchen use. However, in high volume applications where it is a practice to sharpen the knife frequently or even daily, the knife will be expended in a shorter time.

Sharpen only when necessary; prolonged or too frequent sharpening results in unnecessary knife wear.

WARNING: UNPLUG MACHINE POWER CORD.

Turn the index knob fully clockwise to close the gauge plate. Remove the Top Knife Cover by rotating the Latch Knob counterclockwise and lifting it off the slicer. Thoroughly wash the area around the knife, the exposed knife surfaces, and the knife edge. Fat from meat or cheese should not be allowed to transfer from the knife to the sharpener.

Plug in machine power cord. With the carriage tray pulled fully forward, start the slicer with your right hand by pulling the start switch forward and holding it out. If the sharpener handle is the type that does not hang downwards, pull it fully forward for 5 seconds (Fig. 10). If the sharpener handle does hang downwards, lift it with your left hand until horizontal and pull forward for 5 seconds (Fig. 10). Slowly release the sharpener handle. Release the switch knob to turn the slicer off. If necessary, repeat sharpening for another 5 seconds.

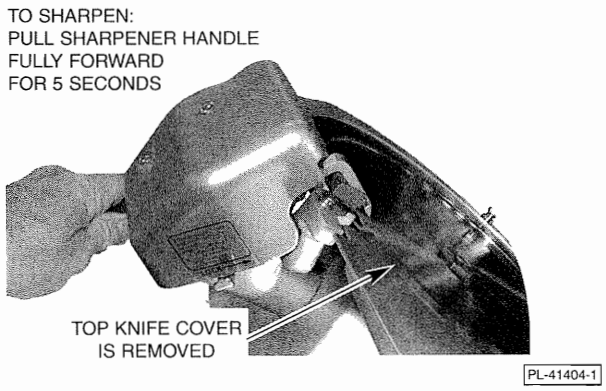

Fig. 10

Unplug machine power cord. Wipe the slicer with a clean damp cloth to remove any grinding particles. Replace the Top Knife Cover.

LUBRICATION — Carriage Slide Rod

Lubricate the Carriage Slide Rod with Lubriplate FMO-200-AW oil (supplied). Either squirt 8 – 10 drops every 2 – 3 months (depending on usage) in the Wick Hole on the Carriage Transport (Fig. 11). Or, once monthly, apply 4 – 5 drops directly on the Carriage Slide Rod on each side of the Carriage Transport (Fig. 11).

To apply oil, pull out the telescoping tube on the oil bottle, aim the tube, and squeeze gently on the sides of the bottle. After applying oil, move the Carriage Tray back and forth a few times so the oil spreads over the entire length of the slide rod.

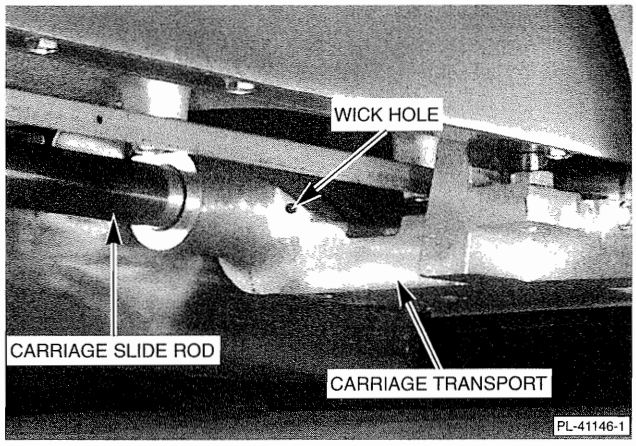

Fig. 11

OVERLOAD RESET BUTTON — MODEL 2912SC

Push the reset button underneath the slicer near the right-front foot if the carriage motor overloads.

SERVICE

Contact your local Hobart-authorized service office for any repairs or adjustments needed on this equipment.