HOBART

INSTRUCTION MANUAL

••• with Replacement Parts

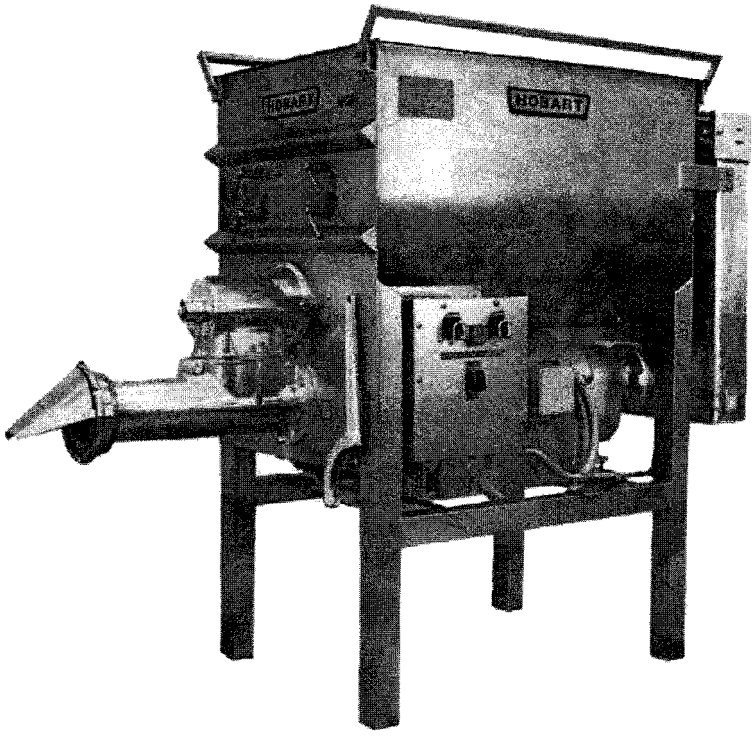

MODEL 4356A MIXER-GRINDER

(INCLUDES MOTOR PARTS)

ML-32679
ML-32680

A product of HOBART CORPORATION TROY, OHIO 45374

FORM 15451 (7-84)

Instructions for Operation and Care of MODEL 4356A MIXER-GRINDER

GENERAL

The model 4356A Mixer-Grinder is designed to process fresh boneless, pre-ground, tempered flaked frozen or a combination of these meats. The hopper volume is 14 cubic feet which provides a weight capacity up to 500 pounds, depending on type of product.

Two motors are used in this machine a 15 horsepower motor for grinding and a 5 horsepower motor for mixing. This allows the operator to feed and grind, mix onty, or grind only.

Using the feed screw and overlapping mixing arms, blending meats, moisture, seasoning, and extenders is quick and efficient. After MIXING, switching to FEED AND GRIND provides steady output of ground meat without bridging.

A MOMENTARY GRIND ONLY operation is also available. Should the grinder cylinder become jammed with meat or clearing of grinder cylinder desired, selection of GRIND ONLY will empty it. In this mode of operation, just the grinder motor runs. The feed screw does not feed additional product to the grinder cylinder.

Options

High speed grinder gears are available which will increase the grinder worm speed from a standard 215 R.P.M. to 288 R.P.M. High speed gears are never to be used for first grind beef. Optional sprockets (along with the proper drive chains) may also be ordered to increase the feed (conveyor) screw speed from 52 to 110 R.P.M. and the mixing arms from 14 to 45 R.P.M.

INSTALLATION

Unpack the mixer-grjnder, install the floor leveling feet and place it in operating position. Adjust the leveling screws so the cylinder end is approximately *1/2"* to 1" lower than opposite end, thus allowing water to drain out of the hopper and grinder cylinder when cleaning.

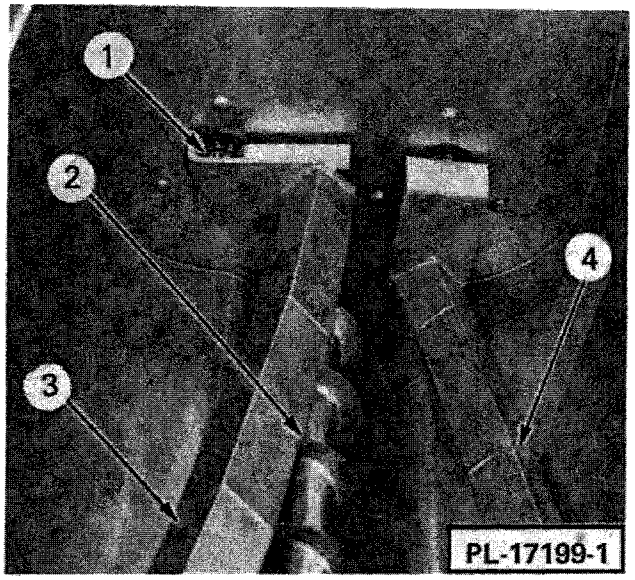

Fig. 1

If machine was shipped with mixing arms installed, they should be removed at this time. Rotate the mixing arm (3, Fig. 1) by hand until the L.H. drive shaft notch *(A,* Fig. 2) is at the vertical top.

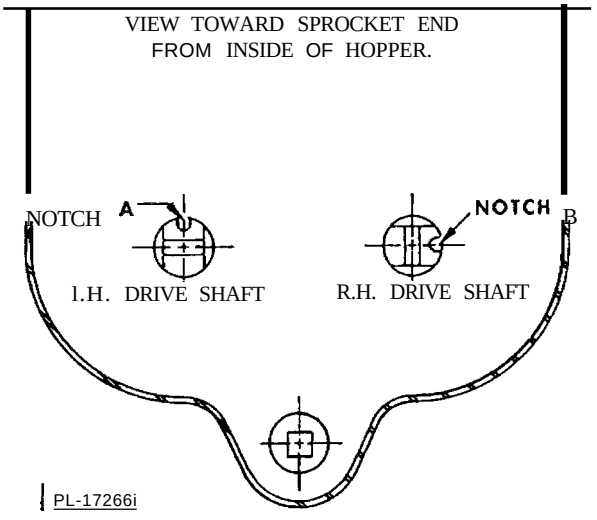

Fig. 2

© HOBART CORPORATION, 1980

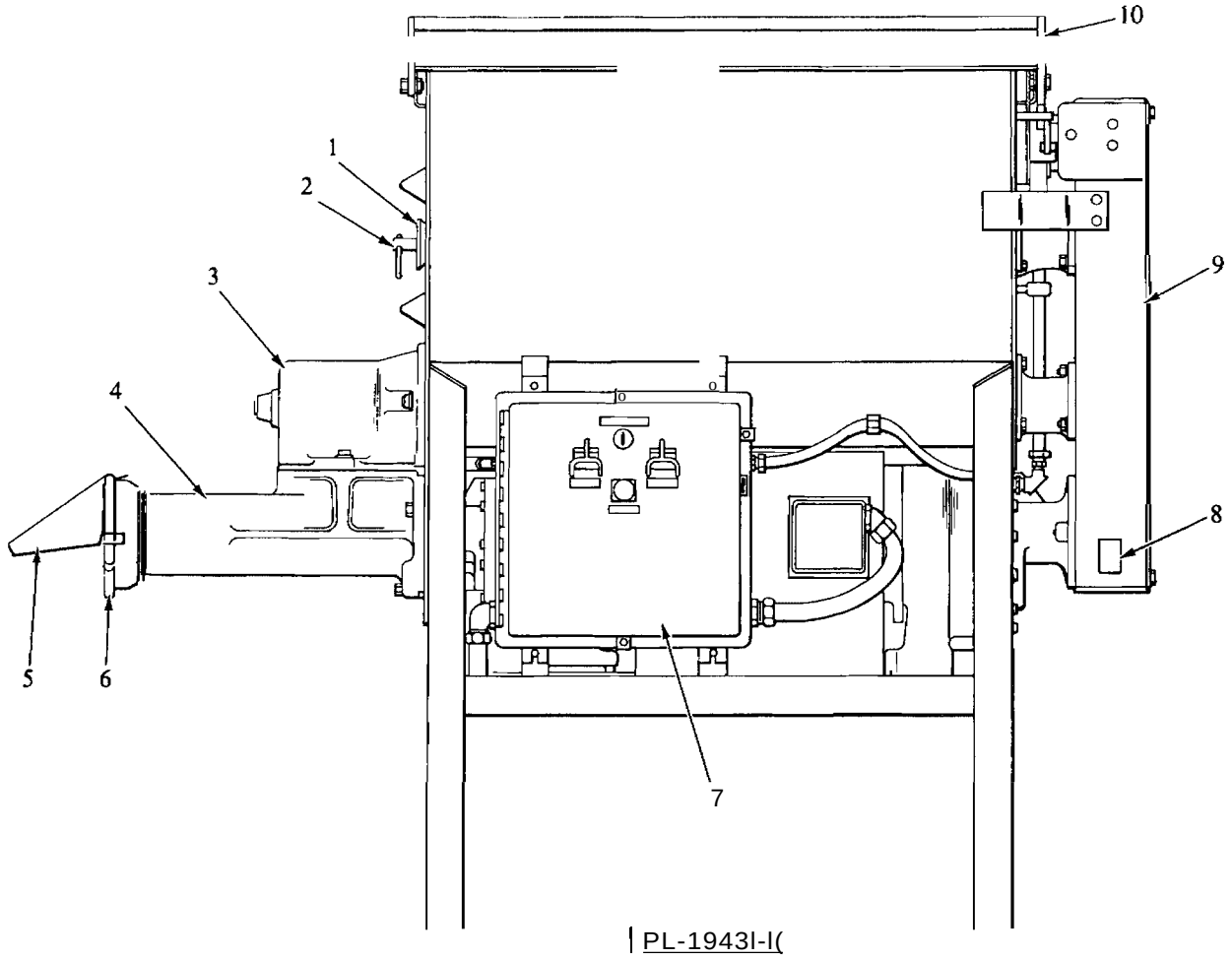

Fig. 3

Loosen the two thumb screws (2, Fig. 3) that retain the mixing arm stub shaft (1, Fig. 3). Rotate and remove the L.H. stub shaft while supporting the front end of the mixing arm inside the hopper. Remove the mix;ng arm" The other mixing arm is removed in the same manner.

Electrical

WARNJNG: ELECTRICAL AND GROUNDING CONNECTIONS IV1UST COMPLY WITH THE APPLICABLE PORTIONS OF THE NATIONAL ELECTRICAL CODE AND/OR OTHER LOCAL ELECTRICAL CODES.

WARNING: DISCONNECT ELECTRICAL POWER SUPPLY AT FUSED DiSCONNECT SWITCH AND PLACE A TAG INDICATING CIRCUIT IS BEING WORKED ON.

All internal wiring of the machine is compJeted before shipping. Before making electrical supply connection, check the specifications on the data plate (8, Fig. 3) to assure they agree with those of your electrical service. See wiring diagram inside sprocket drive case (9, Fig. 3).

Make erectrical connections per the wiring diagram.

BRANCH CIRCUIT SIZE AND PROTECTION

DUAL ELEMENT TIME-DELAY FUSE

Volts	Phase	Minimum Circuit Ampacjty	Maximum Fuse Size	75°C Copper Wire Size
200	3	80	80	#4
230	3	80	80	#4
460	3	40	40	#8

INVERSE TIME CIRCUIT BREAKER

Volts	Phase	Minimum Circuit Ampacity	Maximum Circuit Breaker Size	75°C Copper Wire Size
200	3	80	80	#4
230	3	80	80	#4
460	3	50	50	#8

Motor Rotation

After the electrjcal connection is made, the machine must be checked for correct motor rotation. Install the feed chamber (3, Fig. 3) and tighten the cylinder nuts. Apply electrical power to machine and place the selector switch (4, Fig. 4) in GRIND ONLY. Push the START FEED AND GRIND/ GRIND switch (1, Fig. 4) momentarily and release.

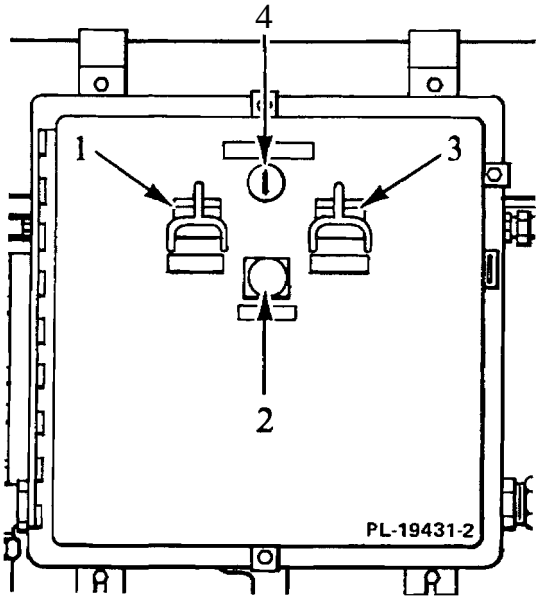

Fig. 4

If the machine rotation is correct, the square drive shaft will turn counterclockwise while facing the feed chamber.

If the machine rotation is incorrect, oil wiJl be pumped out of the transmission. DISCONNECT ELECTRICAL POWER SUPPLY and interchange any two power supply reads at the terminar block. Start the machine momentarily to verify counterclockwise (see arrow) rotation while facing the attachment hub.

Sanitizing

NOTE: The 4356A Mixer-Grinder must be thoroughly cleaned, sanitized and lightly coated with mineral oil after installation and before being assembled for service.

ASSEMBLY

DISCONNECT ELECTRICAL POWER SUPPLY and the conveyor screw (2, Fig. 1) the length of hopper and into square drive shaft. Install grinder cylinder (4, Fig. 3) on the three studs at the hopper end. Secure with cylinder nuts.

Install the feed chamber (3, Fig. 3) and tighten the four nuts.

Apply power to the machine, place the selector switch (4, Fig. 4) in FEED AND GRIND and operate momentarily to position drive shaft notches A & B as shown in Fjg. 2.

DISCONNECT ELECTRICAL POWER SUPPLY and install a mixing arm (3, Fig. 1) into the L.H. drive shaft (1, Fig. 1). While holding the opposite end of the arm the stubshaft (1, Fig. 3) and tighten the two thumb screws (2, Fig. 3).

Rotate the mixing arm by hand until notch B (Fig. 2) of the R.H. drive shaft is up. Install the second mixing arm into the R.H. drive shaft. While holding the opposite end of the arm, install the stubshaft and tighten the two thumb screws.

Check mixing arm clearance by manually rotating assembled arms one compJete turn before applying power.

Install the worm into the cylinder and rotate until the square shank of the worm locks into the attachment hub drive.

Install the grinder knife with cutting edges out.

Install the grinder plate on the worm using caution to align the plate with the alignment pin. Thread the adjusting ring (6, Fig. 3) loosely on the cylinder. Install the meat deflector (5, Fig. 3).

OPERATION

NEVER PUT HAND OR ARMS INSIDE HOPPER unless mixer-grinder is disconnected from electrical power supply.

Spring-loaded safety rails (10, Fig. 3) are hinged at the hopper ends. If either rail is bumped, it will pivot, open the interlock, and stop the machine. The spring wilt return the safety rail to its operating position crosing the interlock. The machine wi1l resume the selected function when restarted by operator.

The feed chamber, secured to the machine hopper by four nuts, must be in position for machine operation. If the feed charrlber is moved from its operating position during operation, an interlock switch will open and stop the machine. The feed chamber must be correctJy instaUed and the machine restarted.

Controls

The control box (7, Fig. with switches for selecting modes of operation, is located on the hopper.

The STOP switch (2, Fig. 4) is used to stop all modes of operation. When changing from one operation to another, the STOP switch first be pushed.

The START MIX switch (3, Fig. 4) is pushed when it is desired to mix the product that is in the hopper. During the MIXING ONLY cycle, the hopper conveyor screw and mixing arms operate in a reverse direction assuring a complete mix of all ingredients in the hopper and preventing meat from entering the feed chamber. Extended mixing may damage meat.

The selector switch (4, Fig. 4) is used to select either the FEED AND GRIND or the GRIND ONLY operation. When the START FEED and GRIND/GRIND switch (1, Fig. 4) is pushed, the machine will operate in the mode selected by the Selector switch (4, Fig. 4).

Running

The knife and plate depend on the meat for lubrication. When starting a cleaned machine the adjusting ring should be Jeft loose until meat begins to come through knife and plate. Once ground meat is visible, the adjusting ring shou ld be tightened hand tight.

The two motors on the mixer-grinder are protected by thermal overloads which sense motor temperature. If either motor overheats, the machine will stop. When motor(s) has cooled, the mixer-grinder can be started.

MAINTENANCE

WARNJNG: DISCONNECT ELECTRICAL POWER SUPPLY AT FUSED DISCONNECT SWITCH AND PLACE A TAG INDICATING CIRCUIT IS BEING WORKED ON BEFORE BEGINNING AND MAINTENANCE PROCEDURE.

Cleaning

NOTE: The control box is provided with heaters to minimize condensation. After cleaning, connect power supply so the heater will be on.

Regular cleaning is required at the end of each working shjft or whenever the machine is to be out of service for an extended period of time (overnight).

The machine is designed for easy cleaning by removing the following components: meat deflector (5/ Fig. 3); adjustjng ring (6, Fig. 3); plate and knife; worm; feed chamber (3, Fig. 3); cylinder (4, Fig. 3); mixing arms (3 & 4, Fig. 1) and conveyor screw (2, Fig. 1).

A rubber seal at each of the three driving shafts (inside the hopper) may be removed for cleaning by grasping the outer flange or using a dull screwdriver tip and pulling seal out.

The grinder can be washed down with high pressure hot water or steam as is customary in meat processing operations.

CAUTION: Use care to avoid direct high pressure flushing of the control box, electrical connections, etc. DO NOT assemble the feed chamber to the machine untiJ the grinder is to be used for processing a product. The feed chamber js interlocked to prevent accidental starting.

Sanitizing

The 4356A Mixer-Grinder must be thoroughly sanitized and coated with mineral oil before being reassembred for service.

Lubrication

Motor transmissions are lubricated at the factory. A dip stick (1, Fig. 5) at each transmission is provided for regular checking of the oil level. Drain and refill the transmission annually with Mobil Lube H.D. - BOW - 90.

The idler spocket should be lubricated at both fittings (1 & 2, Fig. 6) with Alvania #2 lube after each 20 hours of operation.

The chains (3, Fig. 6) should be lubricated with LPS #3 after each 20 hours of operation.

Air Intake

Under normal operating conditions, the motor air intake screens under each gear case) may

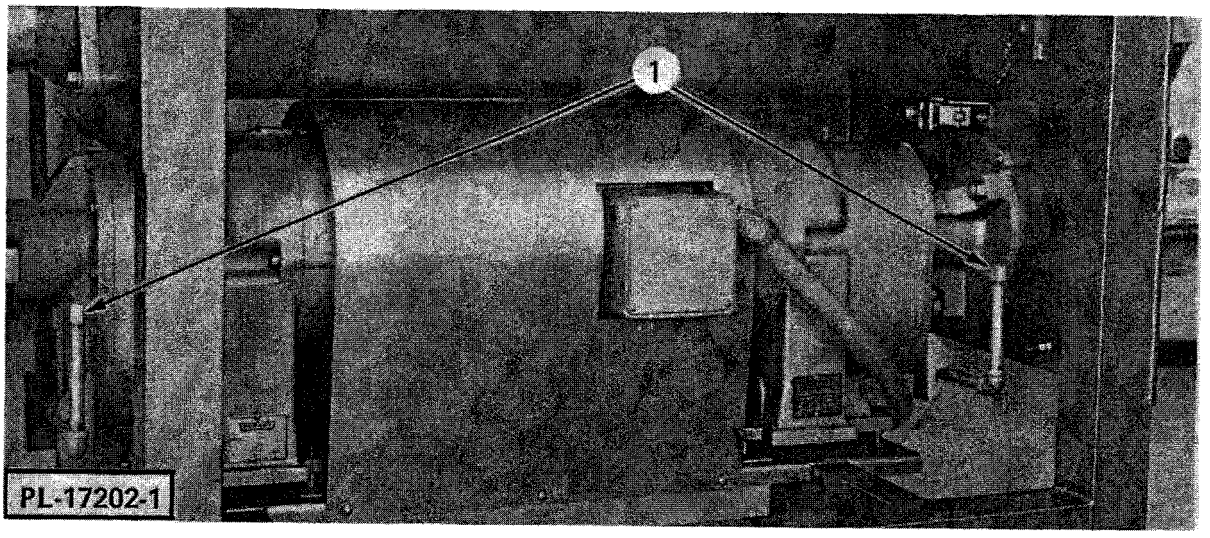

Fig. 5

require occasional cleaning. In installations where flour, seasonings or other foreign materials are present in the air, the screens may become partjally or completely covered, restricting air to the motors. With a clean cloth or soft bristle brush, clean as required.

TROUBLESHOOTING

Symptom - No rvlachine Operation

Possible Cause:

1. One or more of interlocked components not in operating position.
2. Electrical power supply fused disconnect switch in open position.
3. Blown fuse or tripped c;rcuit breaker at electrical power supply.

Syn1ptom - Adjusting Ring Won't Thread Completely On Cylinder.

Possible Cause:

1. Threads on cylinder and/or in adjusting ring are clogged with dried meat particles. Thoroughly clean and oil with tasteless mineral oil.

Symptom - Noise In Gear Cases Or Sprocket Drive Case.

Possible Cause:

1. May be due to inadequate lubrication. See Maintenance for recommended lubrication procedures.

If any symptom persists, contact your local Hobart Service Office.

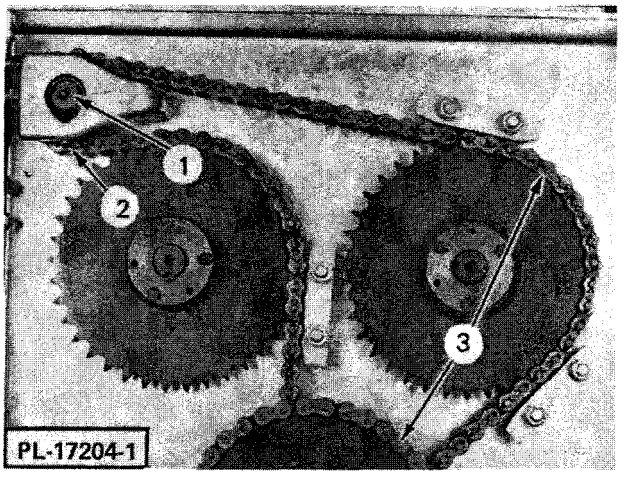

Fig. 6

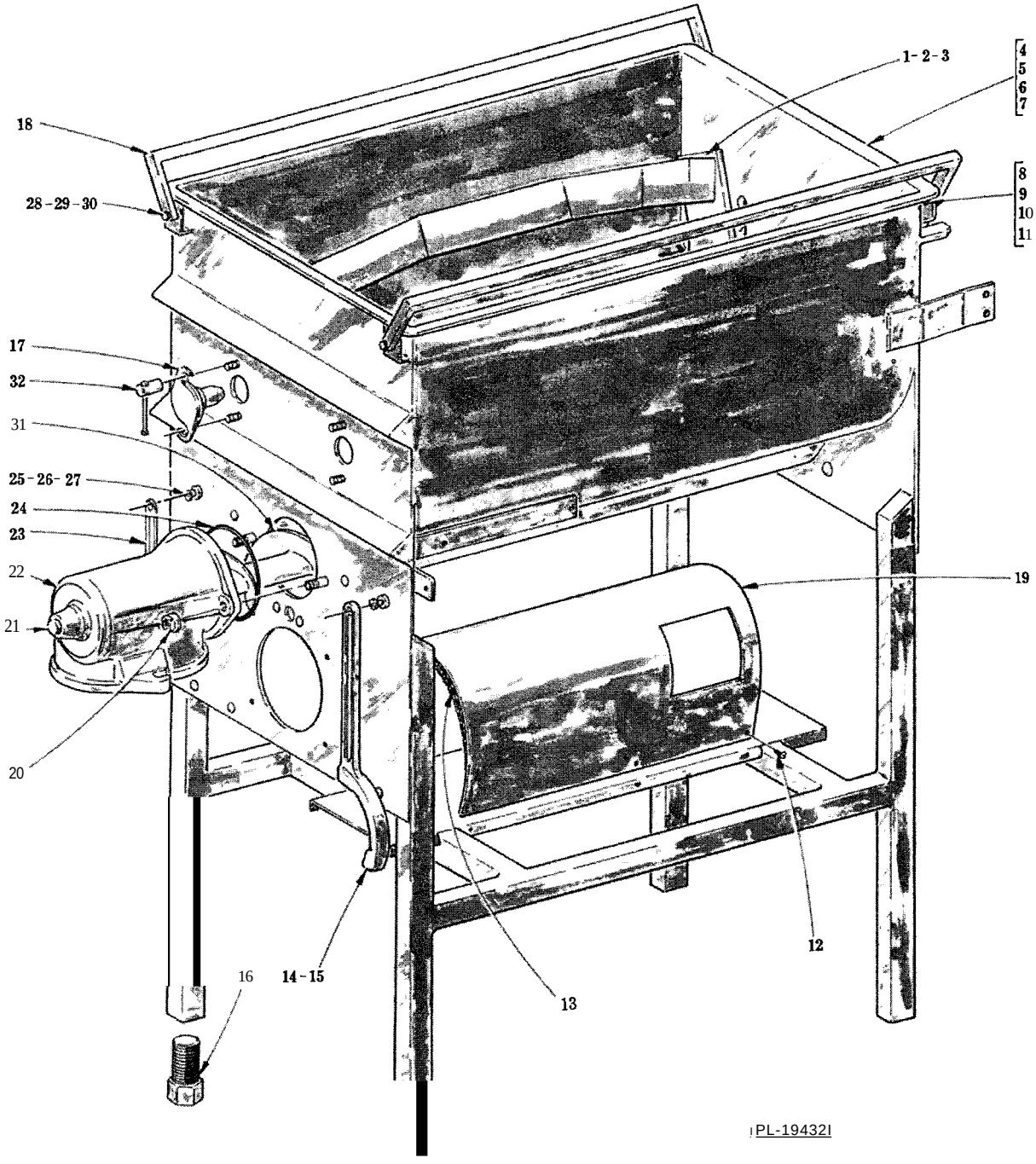

FRAME AND HOPPER UNIT

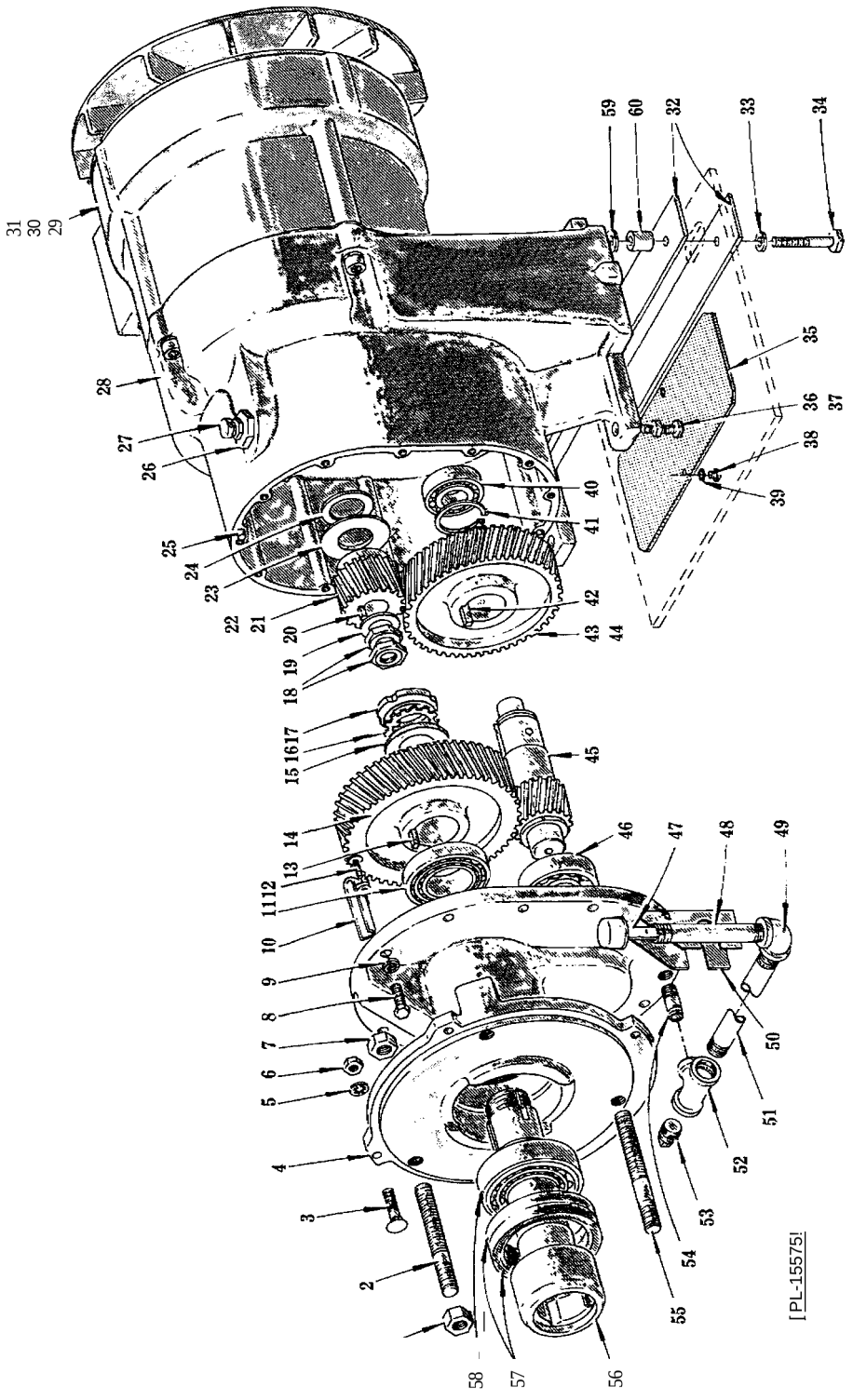

GEAR CASE UNIT (15 H.P.)
(GRINDER)

FRAME AND HOPPER UNIT

ILLUS. PL-19432	PART NO.	NAME OF PART	AMT.
1	C·124790	1st Cut Mixing Arm (Incls. item #3)	2
2	E-I01765	2nd Cut Mixing Arm (Incls. item # 3)	2
3	A-I05237	Mixing Arm Bushing & Loctite Assy	1
4	E-291425-1	Frame & Hopper Assy. (R.H.) (33-1/2" Floor to Center Line Cylinder)	1
5	E-291425-2	Frame & Hopper Assy. (R.H.) (36-1/2" Floor to Center Line Cylinder)	1
6	E-291480-1	Frame & Hopper Assy. (L.H.) (33-1/2" Floor to Center Line Cylinder)	1
7	E-291480-2	Frame & Hopper Assy. (L.H.) (36-1/2" Floor to Center Line Cylinder)	1
8	B-120874	Pivot Bolt - Safety Rail	2
9	WS-29-2	Washer	2
10	WL-6-28	Lock Washer - 3/8" Medium	2
11	NS-15-13	Full Nut - 3/8"-16 Hex Fin	2
12	5D-33-38	Self-Tapping Screw - #10-24 x 1" Pan Hd., Type F	6
13	B-123705	Seal - Motor Shield	2
14	S-80368	Wrench - Spanner (#56)	1
15	D-103829	Wrench - Spanner (#66)	1
16	B-117932	Foot - Adjustable	4
17	P-83787	Shaft - Mixer Arm Stub	2
18	C-120877-1	Safety Rail Assy	2
19	D-290474	Shield - Motor	1
20	M-69862	Nut -Cylinder	2
21	B-112926	Feed Screw Bushing Assy	1
22	D-291456	Cylinder Feed Chamber Assy. (1ncls. item #21)	1
23	M-69863	Wrench - Cylinder Nut	1
24	D-67500-63	"Ot'Ring	I
25	M-83820	Screw - Spanner Wrench Support	2
26	WL-4-6	Lock Washer· 3/8" Medium	2
27	NS-13·25	Full Nut 3/8"-16 Hex Fin	2
28	B-120874	Pivot Bolt - Safety Rail	2
29	WL-6-28	Lock Washer - 3/8" Medium	2
30	N5-15-13	Full Nut - 3/8"-16 Hex Fin	2
31	5·83814	Conveyor Screw Assy	1
32	M-I01557	"T" Thumb Nut Assy	4

GEAR CASE UNIT (15 H.P.)
(GRINDER)

ILLUS. PL-15575	PART NO.	NAME OF PART	AMT.
1	NS-13-43	Full Nut - 5/8"-11 Hex Fin	3
2	M-72981-2	Stud - Cylinder (4" Lg.)	2
3	SC-82-3	Carriage Bolt - 1/4"-20 x I"	4
4	£-118681	Hub .. Attachment (Grinder End)	1
5	WL-8-17	Lock Washer - 1/4" Int. Shakeproof	4
6	NS-13-2	Full Nut - 1/4"-20 Hex Fin	4
7	NS-13-43	Full Nut - 5/8"-11 Hex Fin	3
8	SC-62-24	Cap Screw - 5/16"-18 x 1-1/2" Hex Hd	12
9	WL-3-45	Lock Washer - 5/16" Extra Heavy	12
10	B-l16775	Conveyor - Oil	1
11	BR-2-19	Roller Bearing - Cup & Cone Assy	I
12	SC-69-2	Mach. Screw - #10-32 x 5/8" Phil. Pan Hd., "Nylok"	I
13	C-I09070-23	Key	1
14	D-68953	Gear - Chopper Drive (56T)	1
15	B-123431	Washer Tongue	1
16	WL-17-9	Lock Washer - Timken #TWI07	1
17	NS-34-8	Lock Nut - N.D. # N-07	1
18	V-6566	Lock Nut	2
19	WS-ll-24	Washer	1
20	C-I0907o-17	Key	1
21	C-85812-1	Gear - Motor Pinion (24T)	1
22	C-85812-2	Gear - Motor Pinion (29T) (High Speed)	1
23	M-72536	Flinger - Oil	1
24	M-72S37	Spacer - Oil Flinger..	AR
25	0-11800-239	Dowel	2
26	M-83804	Bushing - Air Vent.	1
27	M-83805	Vent - Air	1
28	T-85852-2	Case - Gear	1
29	B-278028-1	Motor (200/400 V., 60 Hz., 3 Ph.)	1
30	8-278028-.2	Motor (230/460 V., 60 Hz., 3 Ph.)	1
31	B-278028..3	Motor (230/400 V., 50 Hz., 3 Ph.)	1
32	B-113741-1	Spacer - Motor Mounting	2
33	WL-4-6	Lock Washer· 3/8" Medium	2
34	SC-41-36	Cap Screw - 3/8"-16 x 2-1/2" Hex Hd	2
35	C00l 20471	Screen Air Inlet	1
36	NS-15-13	Full Nut - Hex Fin	2
37	SC-41-31	Cap Screw - 3/8"-16 x 1-1/4" Hex Hd	2
38	SC-60-21	Mach. Screw - #10-24 x 1/4" Rd. Hd	2
39	WL·3-20	Lock Washer - #10 Light	2
40	BB-18-33	Ball Bearing - Fafnir #205K	1
41	RR-6-14	Retaining Ring	1
42	C-l09070-21	Key	1
43	C..68954Ool	Gear· Main Drive (6ST)	1
44	C-68954-2	Gear - Main Drive (60T) (High Speed)	1
45	0-68951	Pinion - Countershaft (19T)	1
46	BB-7-21	Ball Bearing - Fafnir #207K	1
47	B-118026	Dip Stick & Cap Assy	1
48	FP-45..58	Nipple - 3/8" x 5" Lg. (T.B.E.)	1
49	FP-14-1	Elbow - 3/8" x 90°	1
50	P-S6972	Bracket - Oil Pipe Support	1
51	FP-45-58	Nipple - 3/8" x 5't Lg. (T.B.E.)	1
52	M-70677	Tee - 3/8" x 3/8" x 1/4" Reducing	1
53	FP-28-9	Plug - 3/8" Sq. Hd. Pipe	1
54	FP..37-5	Nipple - 1/4" xIII Lg. (T.B.E.)	1
55	M-72981-1	Stud - Cylinder (4-1/2" Lg.)	1
56	R-68909	Shaft - Square Drive	1
57	M-72535	Seal	2
58	BR-2-18	Roller Bearing - Cup & Cone Assy	1
59	WS-18-4	Washer	AR
60	B-115233	Spacer	2

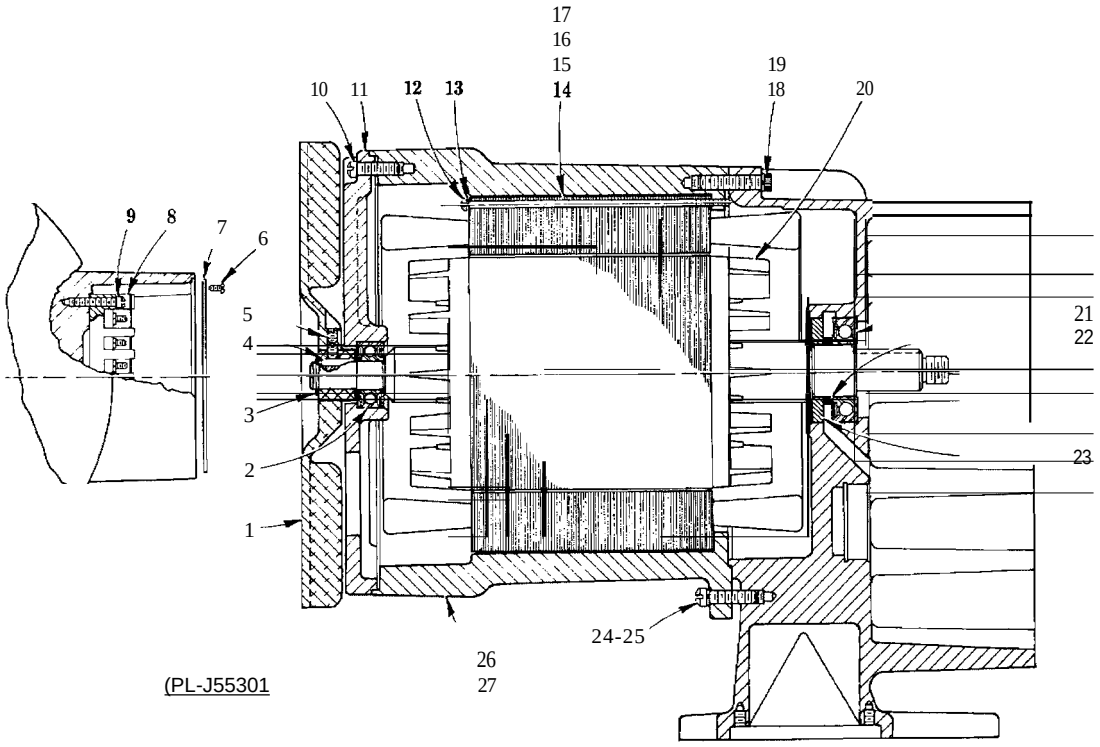

MOTOR UNIT
(15 H.P.)

MOTOR UNIT
(15 H.P.)

ILlUS. PL·15530	PART NO.	NAME OF PART	AMT.
1	D-78421	Fan	1
2	BB-16-37	Ball Bearing - NTN #63204LLU	1
3	RR-4-6	Retaining Ring	1
4	C-I09070-2	Key.	1
5	SC-47-12	Set Screw - 1/4"-20 x 3/8" Soc. Hdls., Kn. Cup Pt	4
6	SC-9-79	Mach. Screw - #6-32 x 5/16" Rd. Hd	4
7	C-275157	Cover - Terminal Box	1
8	B-275192	Terminal Block	1
9	5C-12-36	Mach. Screw - # 10-24 x 3/4" FiL Hd	2
10	5C-11-98	Mach. Screw - 5/16"-18 x *1-1/4"* FiL Hd	3
11	£-275151	Bracket - Bearing	1
12	SC-60-73	Mach. Screw - # 10-32 7-1/8" Rd. Hd	4
13	WL-3-20	Lock Washer - # 10 Light	4
14	D-65478-145-1	Stator Assy. (200/400 V., 60 Hz.)	1
15	D-65478-145-2	Stator Assy. (230/460 V., 60 Hz.)	1
16	0-65478-147-1	Stator Assy. (575 V., 60 Hz.)	1
17	0-65478-146-1	Stator Assy. (50Hz.)	1
18	\VL-3-43	Lock Washer - 5/16" Light	3
19	5C-40-74	Cap - 5/16"-18 x 2" Soc. Fit Hd	3
20	C-15747-301	Rotor Assy	1
21	BB-20-15	Ball Bearing - Fafnir #207KD	1
22	M-68968	-	1
23	M-83715	Detlector - (,rease	1
24	WL-3-43	Lock \Vasher - 5/16" Light	1
25	5C-11-98	Mach. Screw - *5/16"-18* x 1-1/4" Fil. Hd	1
26	£-275150-1	Field Ring	1
27	RP-6-3	Roll Pin .219" Dia, x 5/8" Lg	4

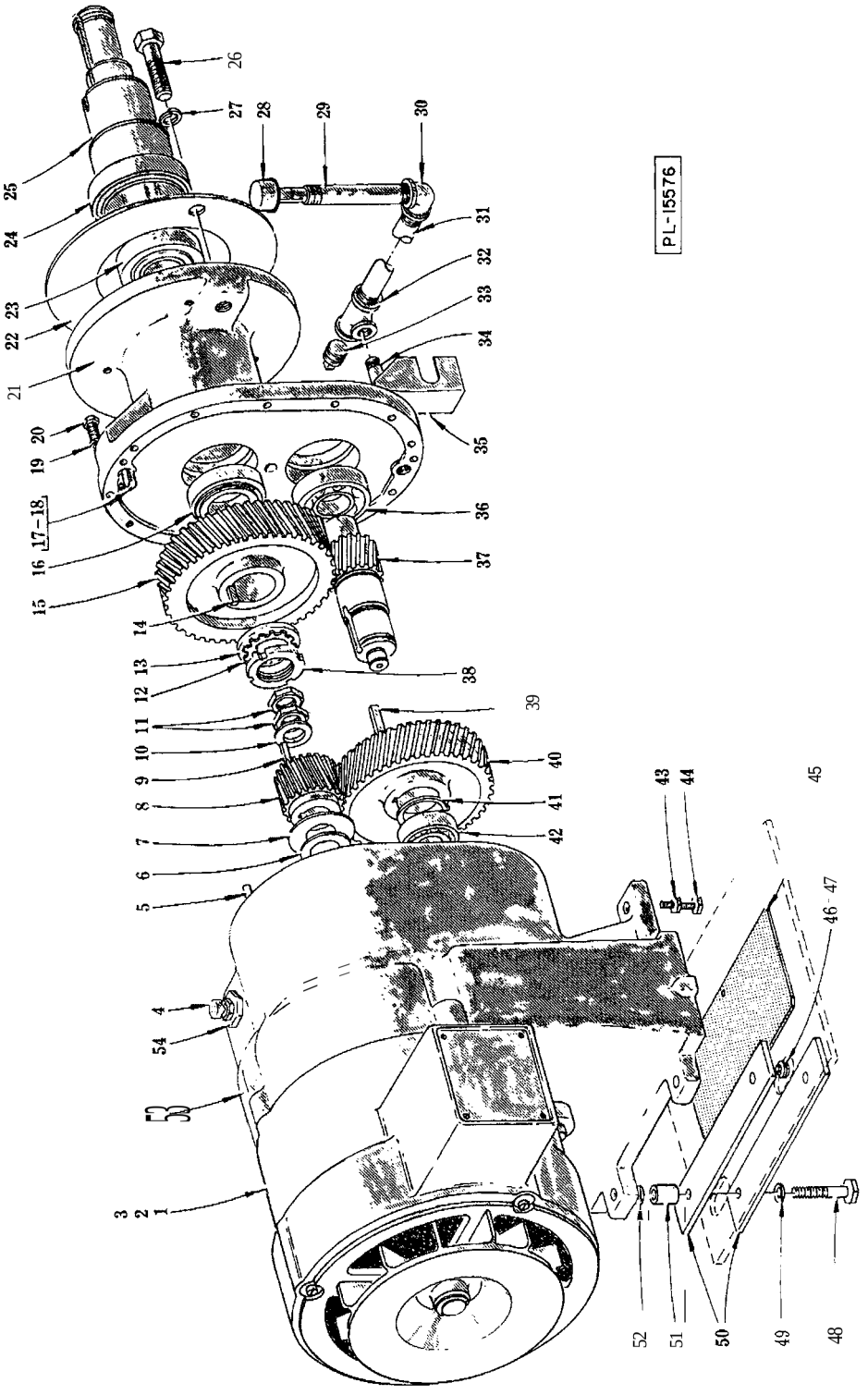

GEAR CASE UNIT (5 U.P.)
(CONVEYOR SCREW AND MIXING ARMS)

GEAR CASE UNIT (5 H.P.)
(CONVEYOR SCREW AND MIXING ARMS)

ILLUS. PL-15576	PART NO.	NAME OF PART	AMT.
1	B-278029-1	Motor (200/400 V., 60 Hz., 3 Ph.)	1
2	B-278029-2	Motor (230/460 V., 60 Hz., 3 Ph.)	1
3	B-278029-3	Motor (230/400 V., 50 Hz., 3 Ph.)	1
4	M-83805	Yent - Air	1
5	0-11800-239	Dowel	2
6	M-72537	Spacer - Oil Flinger.	AR
7	M-72536	Flinger - Oil	1
8	C-85812-1	Gear - Motor Pinion (24T)	1
9	C-I09070-17	Key	1
10	WS-11-24	Washer	1
11	V-6566	Lock Nut	2
12	WL-17-9	Lock Washer - Timken #TW107	1
13	B-123431	Washer - Tongue	1
14	C-109070-20	Key	1
15	D-69833	Gear - Chopper Drive (56T)	1
16	BR-2-20	Roller Bearing - Cup & Cone Assy	1
17	B-116775	Conveyor - Oil	1
18	SC-69-2	Mach. Screw · #10-32 x 5/8" Phil. Pan Rd. "Nylok"	1
19	WL-345	Lock Washer - 5/16" Extra Heavy	12
20	SC-62-24	Cap Screw - 5/16"-18 x 1-1/2" Hex Hd	12
21	E-118682	Hub - Attachment (Sprocket End)	1
22	P-83788	Gasket - Attachment Hub	1
23	BR-2-21	Roller Bearing - Cup & Cone Assy	1
24	B-110058	Seal - Bearing Oil	1
25	D-120988	Shaft - Chain Drive	1
26	SC-62-23	Cap Screw - 5/8"-11 x 2" Hex Hd	2
27	WL-4-17	Lock Washer - 5/8" Light	2
28	B-118026	Dip Stick & Cap Assy	1
29	FP-45-58	Nipple - 3/8" x 5" Lg. (T.B.E.)	1
30	FP-14-1	Elbow - 3/8" x 90°	1
31	FP-45-58	Nipple · 3/8" x 5" Lg. (T.B.E.)	1
32	M-70677	Tee - 3/8" x 3/8" x 1/4" Reducing	1
33	FP-28·9	Plug - 3/8" Sq. Hd. Pipe	1
34	FP-37-5	Nipple - 1/4" x I" Lg. (T.B.E.)	1
35	P-86972	Bracket - Oil Pipe Support	1
36	BB-7-21	Ball Bearing - Fafnir #207K	1
37	0-68951	Pinion - Countershaft (19T)	1
38	NS-34-8	Lock Nut - N.D. #N-07	1
39	C-I09070-21	Key	1
40	C-68954-1	Gear - Main Drive (65T)	1
41	RR-6-14	Retaining Ring	1
42	BB-18-33	Ball Bearing - Fafnir #20SK	1
43	NS-15-13	Cap Screw - 3/8"-16 Hex Fin	2
44	SC-41-31	Cap Screw - 3/8"-16 x 1-1/4" Hex Hd	2
45	C-120471	Screen - Air Inlet	1
46	SC-60-21	Mach. Screw - #10-24 x 1/4" Rd. Hd	2
47	WL-3-20	Lock Washer - #10 Light	2
48	SC-41-36	Cap Screw - 3/8"-16 x 2-1/2" Hex Hd	2
49	WL-4-6	Lock Washer - 3/8" Medium	2
50	B-113741-1	Spacer - Motor Mounting	2
51	B-115233	Spacer"	2
52	WS-18-4	Washer	AR
53	T-85852-2	Case - Gear	1
54	M-83804	Bushing - Air Vent	1

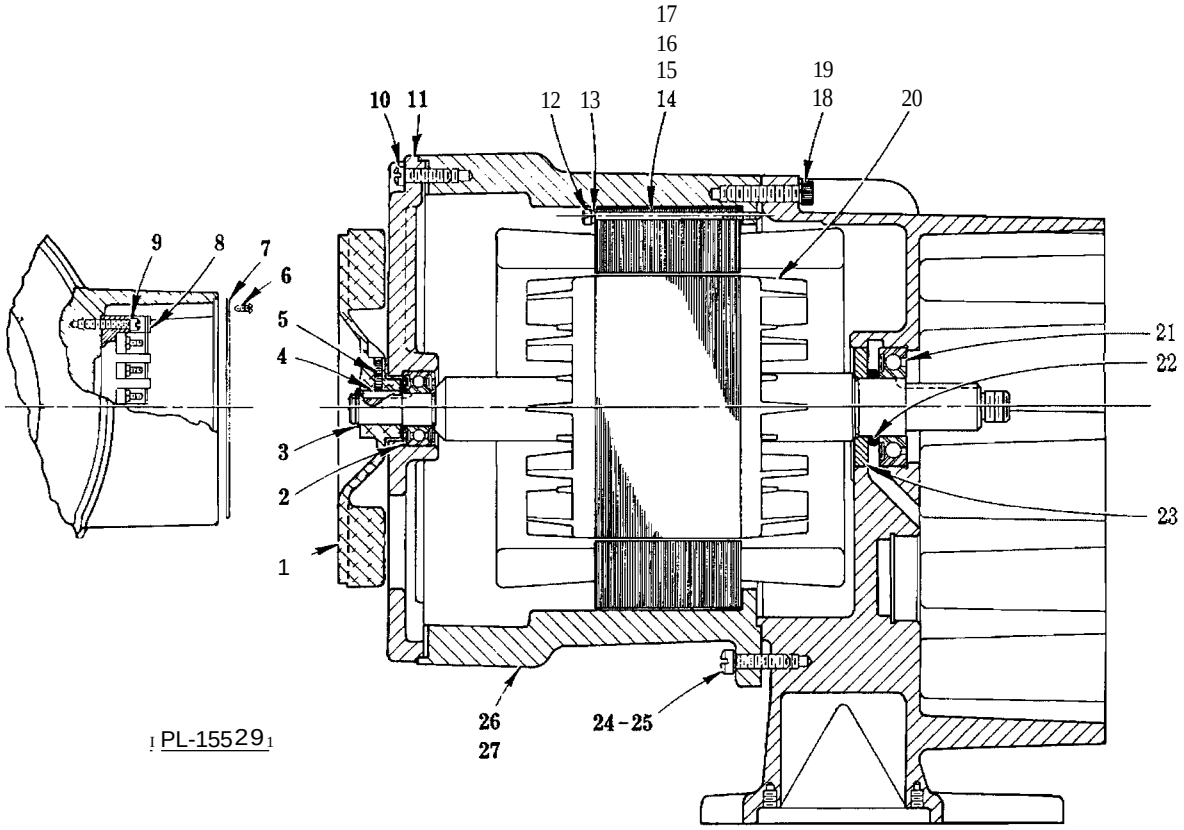

MOTOR UNIT
{5 H.PJ

MOTOR UNIT
(5 H.P.)

JlLUS. Pl-15529	PART NO.	NAME OF PART	AMT.
1	D-275183	Fan	I
2	BB-16-37	Ball Bearing - NTN #63204LLU	I
3	RR-4-6	Retaining Ring	I
4	C-I09070-2	Key	1
5	SC-47-12	Set Screw - 1/4"-20 x Soc. Hdls.. Kn. Cup Pt	2
6	5C-9-79	Mach. Screw - #6-32 Rd. Hd	4
7	C-275157	Cover - Terminal Box	I
8	B-275192	Terminal Block	1
9	5C-12-36	Mach. Screw - # 10-24 x 3/4" Fil. Hd	2
10	5C-11-98	Mach. Screw - 5/16"-18 x 1-1/4" Fil. Hd	3
11	E-275151	Bracket - Bearing	1
12	SC-12-62	Mach. Screw - #10-32 x 4" Fit Hd	4
13	\VL-3-20	Lock Washer - # 10 Light	4
14	D-65478-148-1	Stator Assy. (200/400 V., 60 Hz.)	1
IS	D-65478-148-2	Stator Assy. (230/460 V., 60 Hz.)	1
16	D-65478-150-1	Stator Assy. (575 V., 60 Hz.)	1
17	D-65478-149-1	Stator *Assy.* (50 Hz.)	1
18	\VL-3-43	Lock Washer -5/16" Light	3
19	SC-40-74	Cap Screw - 5/16"-18 x Soc. Fit Hd	3
20	C-15747-302	Rotor Assy	1
21	BB-20-15	Ball Bearing - Fafnir #207KD	1
22	M-68968	Spacer - Bearing	1
23	M-83715	Deflector - Grease	1
24	WL-3-43	Lock Washer - 5J16" Light	1
25	5C-11-98	Mach. Screw - *S/16"-18* x *1-1/4"* Fit Hd	1
26	E-275156-1	Field Ring	1
27	RP-6-3	Roll Pin - .219" Dia. 5/8" Lg	4

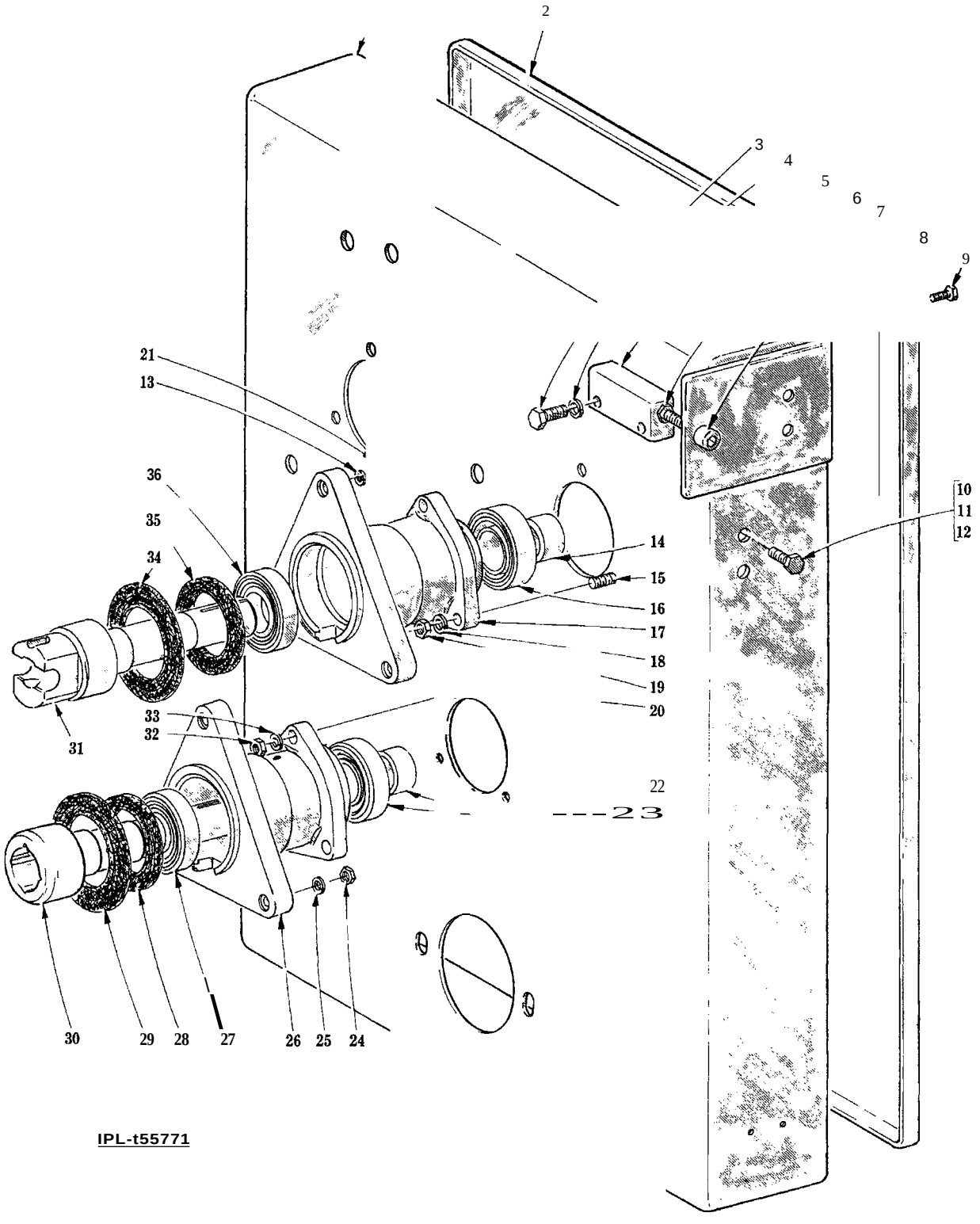

SPROCKET DRIVE CASE UNIT

SPROCKET DRIVE CASE UNIT

ILLUS. PL-15571	PART NO.	NAME OF PART	AMT.
1	E-120895	Drive Case Assy..	1
2	£-120894	Cover - Drive Case	1
3	se-90-l	Cap Screw - 1/2"-13 x Hex Hd	2
4	WL-4-11	Lock Washer - 1/2" Medium	2
5	M-87206	Block· Rear Adjustable	1
6	NS-13-33	FulINut-l/2"-13 Hex Fin	1
7	SC·40·82	Cap Screw - 1/2"-13 x 2-1/2" Soc. Fit Hd	1
8	WS-17-29	Washer	4
9	SC-4I-3	Cap Screw - 1/4"-20 x 1-1/8" Hex Hd	4
10	SC-41-44	Cap Screw -1/2"-13 x 1-1/4" Hex Hd	4
11	WL-4-1I	Lock Washer - 1/2" Medium	4
12	N5-13-33	Full Nut -1/2"-13 Hex Fin	4
13	WL-4-11	Lock Washer - 1/2" Medium (With 1/2" Stud)	6
14	M-89367	Sleeve - Spacing	2
15	SC-97-44	Cap Screw· 1/2"-13 x 1-3/4" Hex Hd	6
16	BB-20-13	Ball Bearing (MRC #308SZZ)	2
17	5-108576	Carrier - Bearing (Mixing Arm)	2
18	WL-4-11	Lock Washer - 1/2" Medium	6
19	NS-13-33	Full Nut - 1/2"-13 Hex Fin	6
20	SC-97-44	Cap Screw -1/2"-13 x 1-3/4" Hex Hd	3
21	NS-13-33	Full Nut - 1/2"-13 Hex Fin. (With 1/2" Stud)	6
22	M-89367	Sleeve - Spacing.	1
23	BB-20-13	Ball Bearing (MRC #308SZZ)	1
24	NS-13-33	Full Nut - 1/2"-13 Hex Fin. (With 1/2" Stud)	3
25	WL-4-11	Lock Washer· 1/2" Medium (With 1/2" Stud)	3
26	5-108576	Carrier - Bearing (Conveyor Screw)	1
27	BB-20-11	Ball Bearing (MRC #209SZZ)	1
28	M-72535	Seal - Outer	1
29	M-83783	Seal - Inner	1
30	0-123450	Shaft - Conveyor Square Drive	1
31	D-123456	Shaft - Mixing Arm Drive	2
32	NS-13-33	Full Nut - 1/2"-13 Hex Fin	3
33	WL-4-11	Lock Washer - 1/2" Medium	3
34	M-83783	Seal - Inner	2
35	M-72535	Seal- Outer	2
36	DB-20-II	Ball Bearing (MRC #209SZZ)	2
	5-108813-2	Bearing Carrier Assy. (Mixing Arm) (Incls. items # 16, 17, 31, 35 & 36)	2
	5-108814-2	Bearing Carrier Assy. (Conveyor Screw) (lncis. items #23, 26, 27, 28 & 30)	1

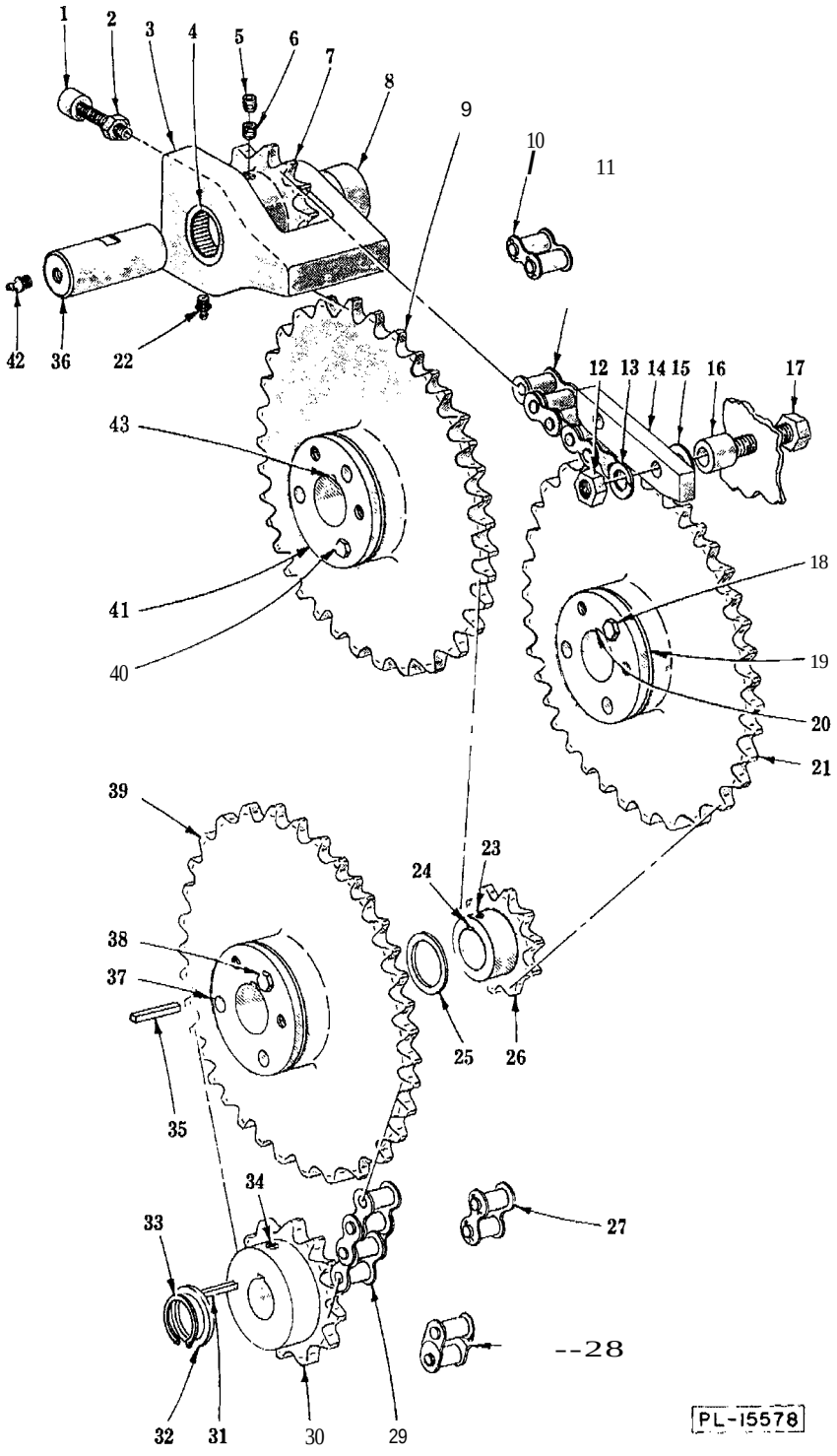

SPRoeKET DRIVE UNIT

SPROCKET DRIVE UNIT

ILLUS. PL-15578	PART NO.	NAME OF PART	AMT.
1	SC-40-82	Cap Screw - 1/2"-13 x 2-1/2" Soc. Fil. Hd	2
2	NS-13-33	Full Nut - 1/2"-13 Hex Fin	2
3	R-87909	Idler Sprocket Support & Needle Bearing Assy. (lncls. items #4 & 8)	1
4	BN-2-19	Bearing - Needle (Torrington #B-2414-0H)	1
5	SC-64-18	Set Screw - 1/2"-13 x 1/2" Soc. Hdis., Cup Pt. "Nylok"	1
6	SC-47-59	Set Screw - 1/2"-13 x 1/2" Soc. Hdls., Kn. Cup Pt	1
7	P-84985	Sprocket (13T) (Idler)	1
8	BN-2-20	Bearing - Needle (Torrington #M-24141)	1
9	C-118861-6	Sprocket & Bushing Assy. (37T) (Driven, Mixing Arm) (IncIs. item #41)	1
10	B-114545	Link - Connecting (#80 H)	AR
11	D-119493-7	Mixing Arm Drive Chain Assy. (84" Lg.) (Incls. item #10)	1
12	NS-13-43	Full Nut - 5/8"-11 Hex Fin	6
13	WL-4-17	Lock Washer - 5/8" Light	6
14	P-89842	Block - Chain Guide	3
15	WS-I0-41	Washer	AR
16	M-89844	Spacer	6
17	SC-90-53	Cap Screw - 5/8"-11 x 2-3/4" Hex Hd	6
18	SC-62-22	Cap Screw - 3/8"-16 x 1-1/4" Hex Hd	3
19	B-118830-3	Bushing - Taper Lock (Q1) (lncls. item #18)	1
20	C-I09070-25	Key	1
21	C-118861-6	Sprocket & Bushing Assy. (37T) (Driven, Mixing Arm) (Incls. item # 19)	1
22	OG-3-49	Oiler - 1/8" Pipe Thd..	1
23	*SC-75-15*	Set Screw - 5/16"-18 x 3/8" Soc. Hdis., Cup Pt	1
24	C-I09070-23	Key	1
25	M-89412	Washer - Sprocket Spacing	AR
26	E-118854-9	Sprocket (lOT) (Driven, Mixing Arm) (Incis. item #23)	1
27	B-1 14545	Link - Connecting (#80 H)	AR
28	B-114192	Link - Offset (#80 H)	AR
29	M-85503	Conveyor Drive Chain Assy. (45" Lg.) (Incls. items #27 & 28)	1
30	C-118854-8	Sprocket (9T) (Motor Drive) (Inds. item #34)	1
31	C-109070-9	Key	1
32	WS-14-43	Washer	AR
33	RR-6-8	Retaining Ring	1
34	SC-75-15	Set Screw - 5/16"-18 x 3/8" Soc. Hdls., Cup Pt	1
35	C-I09070-25	Key	1
36	P-84982-1	Shaft - Idler Support	1
37	B-118830-3	Bushing - Taper Lock (Ql) (Incis. item #38)	1
38	SC-62-22	Cap Screw - 3/8"-16 x 1-1/4" Hex Hd	3
39	C-118861-6	Sprocket & Bushing Assy. (37T) (Driven, Conveyor Screw) (Incls. item #37)	1
40	SC-62-22	Cap Screw - 3/8"-16 x 1-1/4" Hex Hd	3
41	B-118830-3	Bushing - Taper Lock (Ql) (lncis. item #40)	1
42	OG-349	Oiler - 1/8" Pipe Thd	1
43	C-I09070-25	Key	1
	R-87331-1	Idler Assy. (Inels. items. #3, 5, 6, 7, 22, 36 & 42)	1
	D-120964-1	Sprocket & Chain Kit (IncIs. items #11 & 26 thru 30)	1

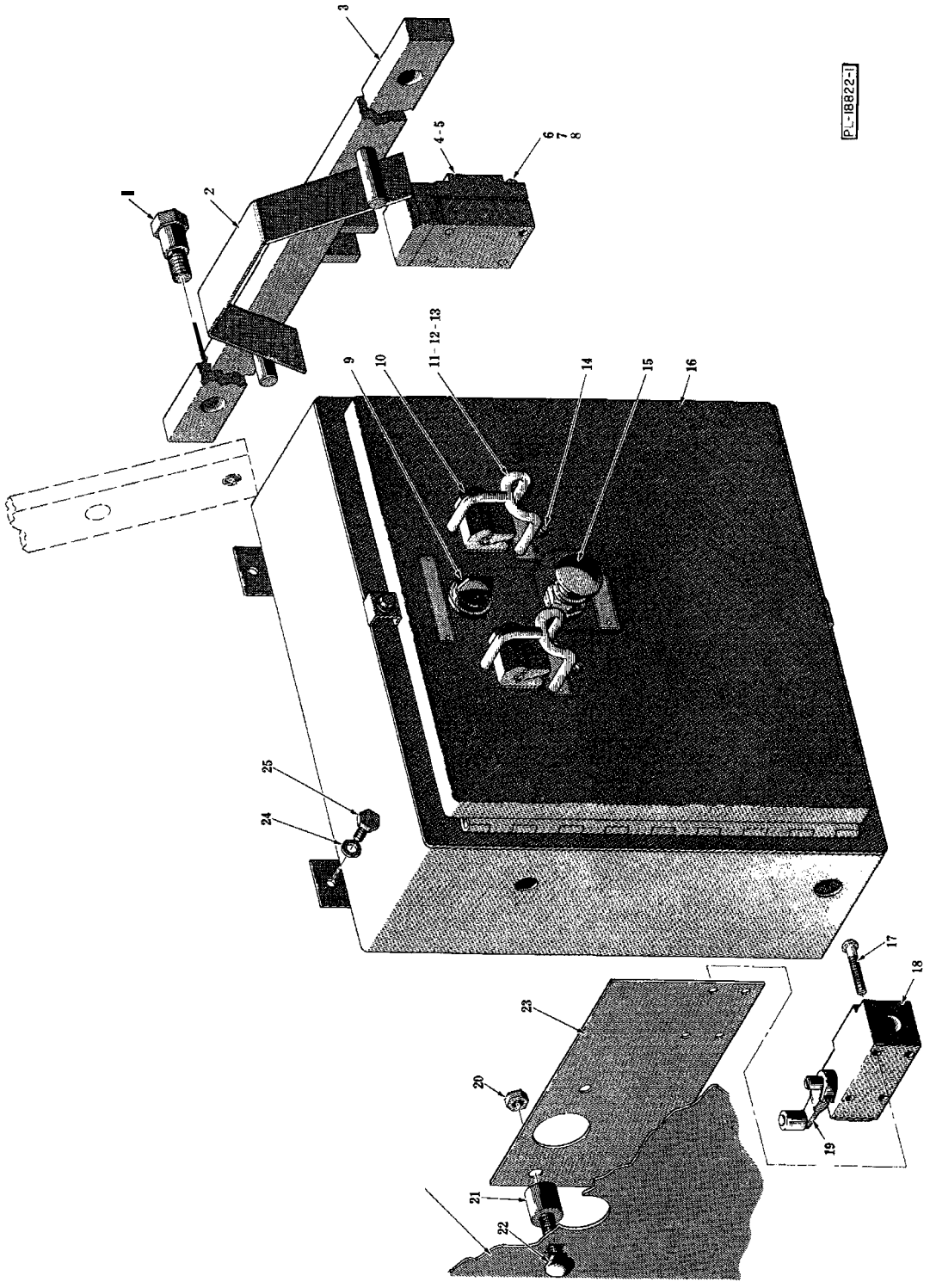

INTERLOCK AND CONTROL BOX UNIT

INTERLOCK AND CONTROL BOX UNIT

ILLUS.. PL·18822·1	PART NO.	NAME OF PART	AMT.
1	120873	Pivot Bolt - Transverse Bar	2
2	120926	Spring - Safety Rail	1
3	291152-1	Transverse Bar Assy	1
4	87711-175-1	Limit Switch Assy. (lncls. item #5)	1
5	294235-1	Lever Arm - Limit Switch	1
6	SC-98-5	Mach. Screw - #10-24 x *1-1/2"* Rd. Hd	2
7	WS-19-6	Washer	2
8	NS-11-18	Mach. Nut· #10-24 Hex	2
9	87711-169-1	Selector Switch - NEMA 4-4X	1
10	87711-171-1	Push ButtOD - NEMA 4	2
11	115090	Switch Guard Assy	2
12	SC-21-8	Mach. Screw - #6-32 x 3/8" Rd. Hd	6
13	\VS-23-44	Washer	6
14	118068	Pilot Light Ass}'	2
15	87711-187-3	Push Button Assy	1
16	291420	Control Box	1
17	SC-98-5	Mach. Screw - #10-24 x *1-1/2"* Rd. Hd	2
18	87711-174-2	Limit Switch	1
19	294235-1	Lever Arm .. Limit Switch	1
20	NS-15-1	FuU Nut - 1/4"-20 Hex Fin	2
21	115233	Spacer - Control Box..	2
22	SC-113-23	Mach. Screw - 1/4"-20 x 1-3/8" Rd. Rd. Sq. Neck	2
23	291414	Bracket - Interlock Switch Mounting	1
24	\VL-6-28	Lock Washer - 3/8" Medium	4
25	SC-41-26	Cap Screw - 3/8"-16 x 1/2" Hex Hd	4

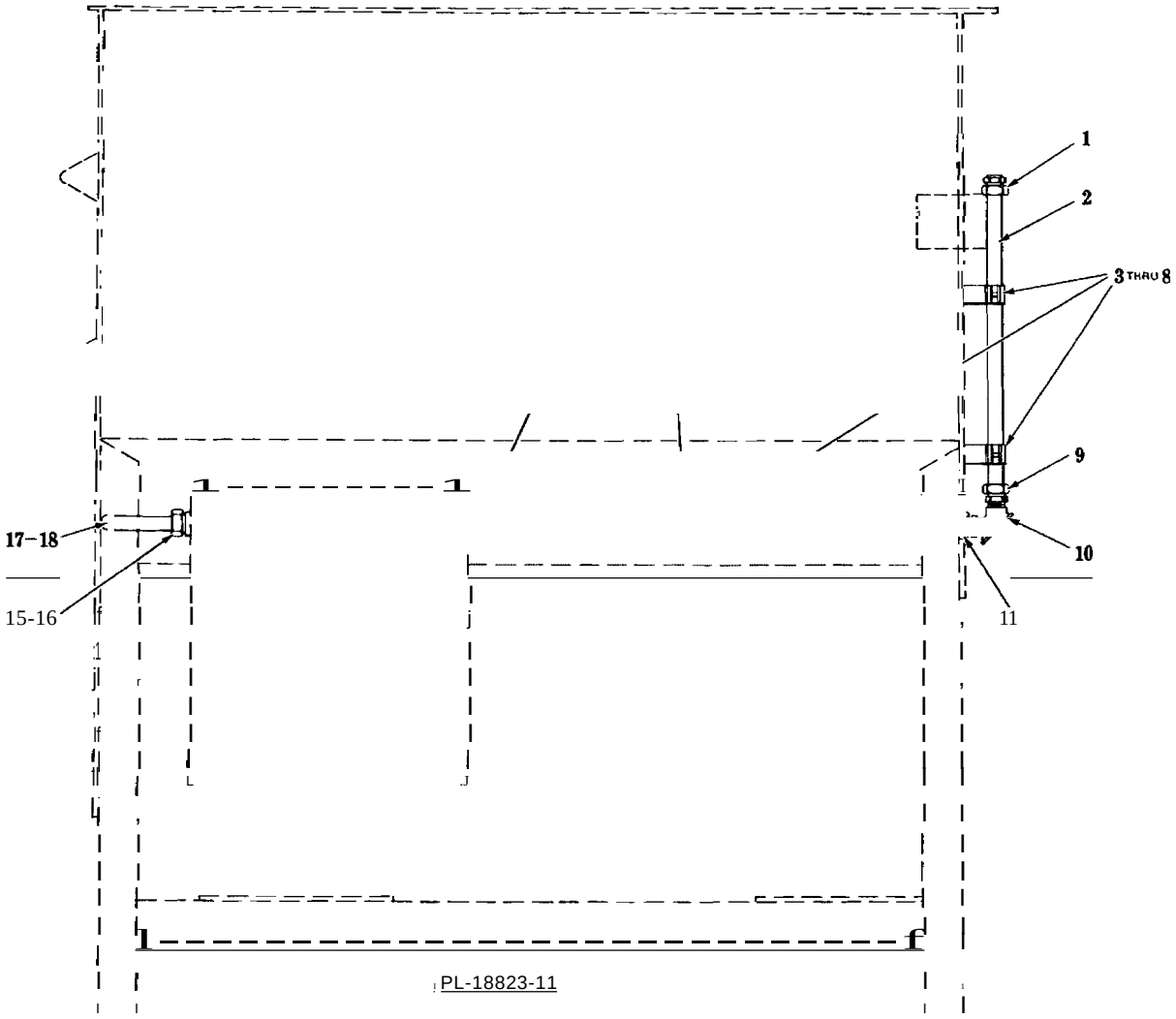

CONDUIT (INTERLOCK SWITCHES TO CONTROL BOX)

CONDUIT (INTERLOCK SWITCHES TO CONTROL BOX)

ILLUS. Pl-18823-1	PART NO.	NAME OF PART	AMT.
1	FE-7-4	Connector - Straight "Sealtite" (1/2" Male Thd x 1/2" Flex. end.)	1
2	77658-17	Conduit - 1/2" x 26" Flex	1
3	62271	Hanger - Cable	3
4	SC-21-47	Mach. Screw - 1/4"-20 x 1" Rd. Hd	3
5	\VL-6-17	Lock Washer - 1/4" Medium	3
6	NS-15-1	Full Nut - 1/4"-20 Hex Fin	3
7	SC-21-37	Mach. Screw - 1/4"-20 x 3/8" Rd. Hd	3
8	WL-6-17	Lock Washer - 1/4" Medium	3
9	FE-7-4	Connector - Straight "Sealtite" (1/2" Male Thd. x 1/2" Flex. Cnd.)	1
10	FE-7-31	Ell - 90° x 1/2" Pulling	1
11	FE-7-4	Connector Straight "Sealtite" (1/2" Male Thd. x 1/2" Flex. end.)	1
12	77658-22	Conduit - 1/2" x 18-3/4" Flex	1
13	FE-7-4	Connector - Straight "Sealtite" (1/2" Male Thd. x 1/2" Flex. Cnd.)	1
14	FE-8-10	1/2" Gasket Assy	1
15	FE-?-?	Connector - 90° "Sealtite" (1/2" Male Thd. x 1/2" Flex. Cnd.)	1
16	FE-8-10	1/2" Gasket Assy	1
17	FE-7-4	Connector - Straight (1/2" Male Thd. x 1/2" Flex. Cnd.)	1
18	77658-45	Conduit - 1/2" x 12" Flex	1

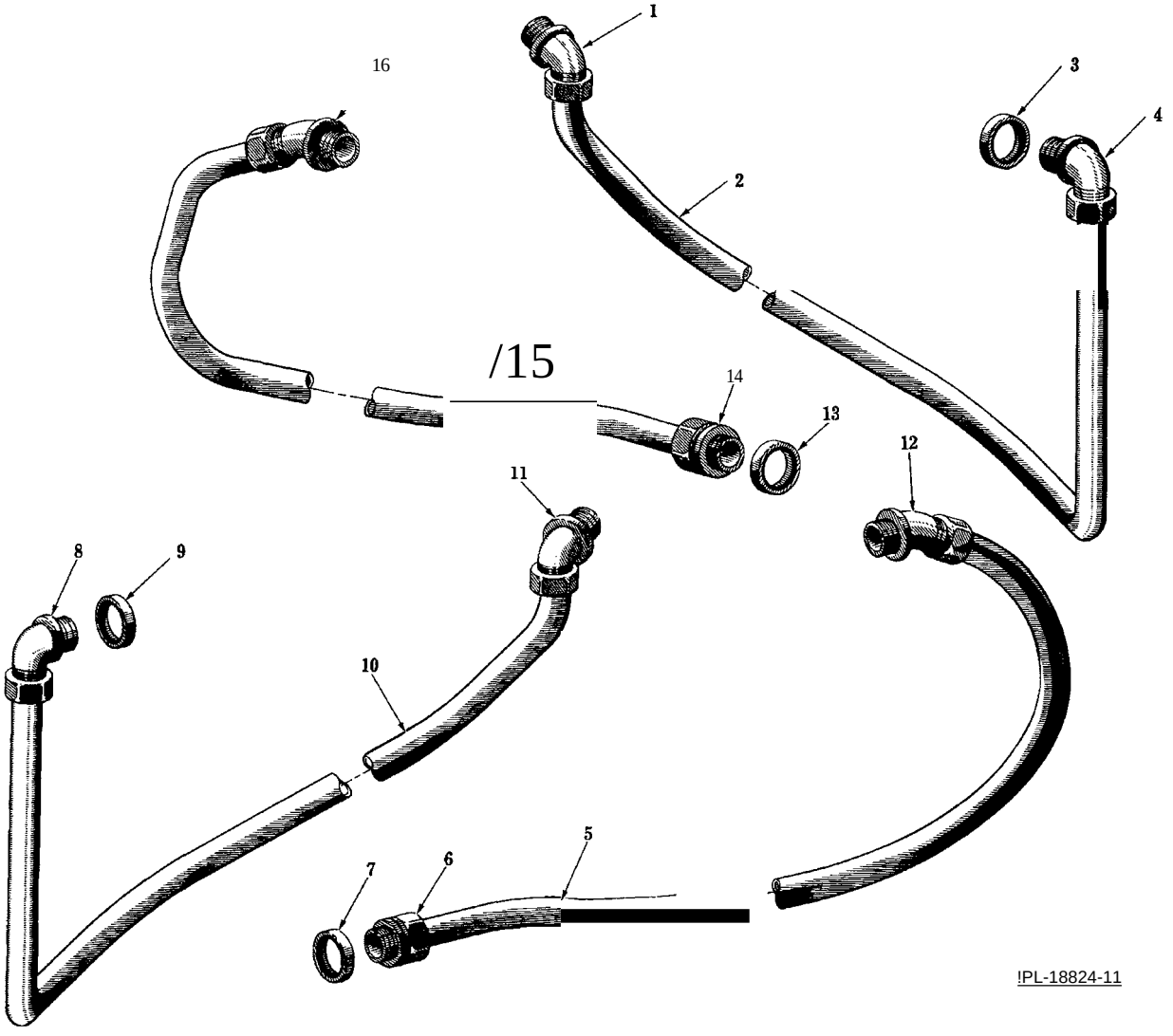

CONDUIT (MOTOR TO CONTROL BOX)

CONDUIT (MOTOR TO COTROL BOX)

ILLUS. PL-18824-'	PART NO.	NAME OF PART	AMT.
**1	FE-8-32	Connector - 45° "Sealtite" (1" Male Thd. x1" Flex. Cnd.)	1
**2	104192-8	Conduit - 1" "Sealtite" (Grinder Motor to Control Box)	1
**3	*FE-B-12*	1" Gasket Assy	1
**4	FE-B-33	Connector" 90° uSealtite" (111 Male Thd. x1" Flex. Cnd.)	1
*5	104192-3	Conduit - 111 (Sprocket Motor to Control Box)	1
*6	FE-B-31	Connector - Straight "Sealtite"' (I" Male Thd. x 111 Flex. Cnd.)	1
*7	FE-B-12	1" Gasket Assy	1
*8	FE-8-33	Connector - 90° USealtite" (1" Male Thd. x1" Flex. Cnd.)	1
*9	FE-S-12	I" Gasket Assy	1
*10	104192-16	Conduit - 1" (Grinder Motor to Control Box)	I
*11	FE-8-32	Connector - 45° "Sealtite" (1" Male Thd. x 111 Flex. Cnd.)	1
*12	FE-8-32	Connector - 45° (1" Male Thd. x1" Flex. Cnd.)	1
**13	FE-8-12	111 Gasket Assy	1
**14	FE-8-31	Connector - Straight (1" Male Thd. x 1" Flex. Cnd.)	1
**15	104192-12	Conduit - 1" "Sealtite" (Sprocket Motor to Control Box)	1
**16	FE-8-32	Connector· 45° "Sealtite" (1" Male Thd. x1" Flex. end.)	1

*R.H. Mounted Control Box.
**L.H. Mounted Control Box.

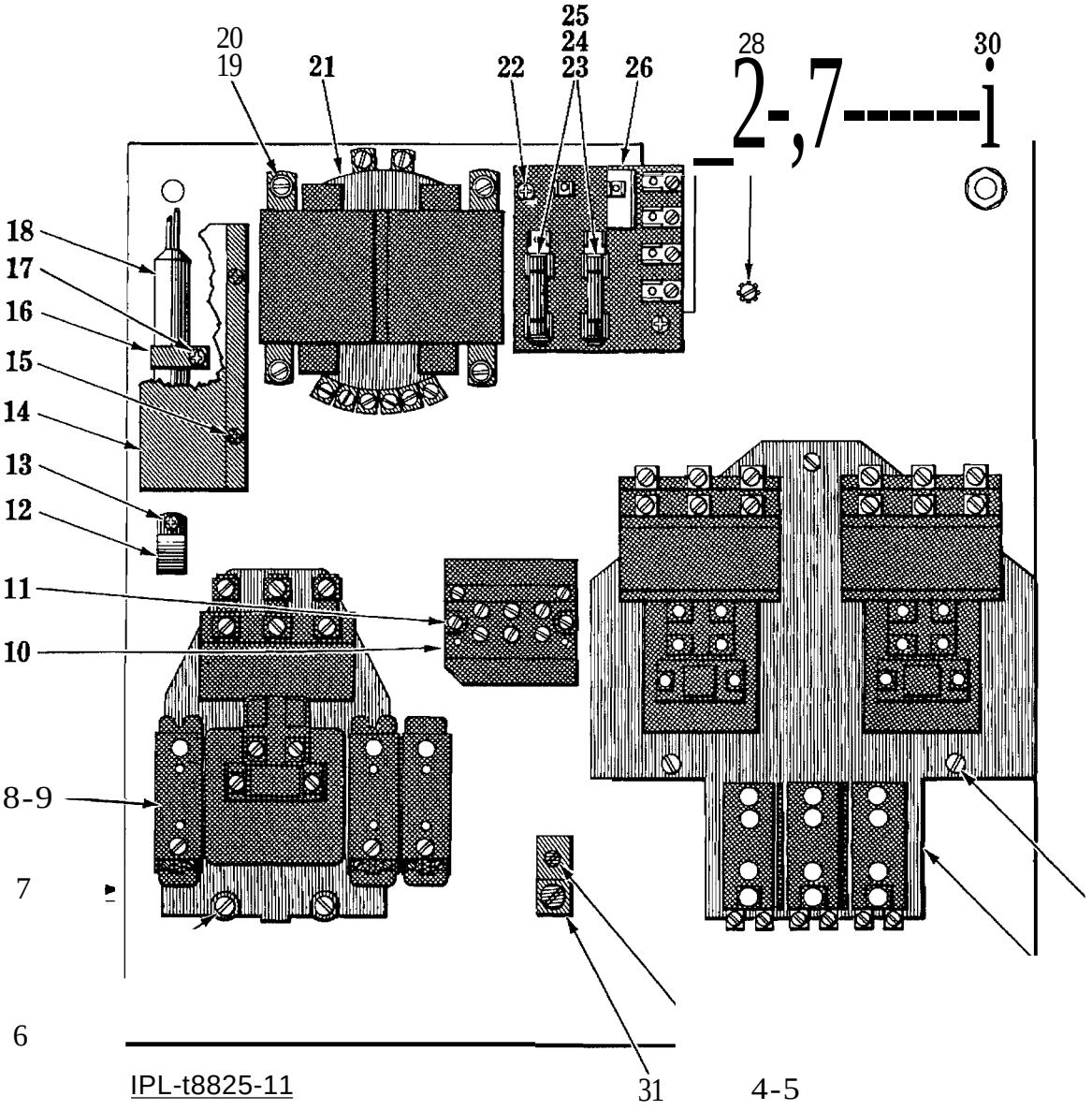

CONTROL UNIT

CONTROL UNIT

ILLUS. PL-1882S-'	PART NO.	NAME Of PART	AMT.
t	SC-21-23	Mach. Screw - #10-24 x 1/2" Rd. Hd	3
2	8771243-2	Starter (5 H.P. Motor)	1
3	*	Heater Element - Starter	AR
4	SC-S-8!	Mach. Screw - 1/4" 20 x 1/2" Rd. Hd	1
5	WL-8-17	Lock Washer - 1/4" Int. Shakeproof	1
6	5C-21-23	Mach. Screw - #10-24 x 1/2" Rd. Hd	3
7	291393	Control Panel	1
8	87712-46-1	Starter (15 H.P. Motor)	1
9	*	Heater Element - Starter	AR
10	294325-3-1	Terminal Block	1
11	50.29-11	Self-Tapping Screw - #6-32 x 1" Phil. Pan Hd. Type F	2
12	78752-4	Clamp - Wire	1
13	80.941	Self-Tapping Screw - #8-32 x 3/8" Phil. Pan Hd., Type F	1
14	117979	Shield - Heater	1
15	S0-9-41	Self-Tapping Screw - #8-32 x 3/8" Phil. Pan Type F	2
16	108199-2	Clamp	1
17	So.9-41	Self-Tapping Screw - #8-32 x 3/8" Phil Pan Hd., Type F	1
18	108202-6	Heater & Terminals	1
19	WS-19-tO	Washer	4
20	SD-29-15	Self-Tapping Screw - #10-24 x SISN Pan Hd., Type F	4
21	102729	Transformer	1
22	5D-9-41	Self-Tapping Screw - #8-32 x 3/8" Phil. Pan Hd., Type F	2
23	FE-22-52	Fuse (1.6 Amp.) (460 V.)	2
24	FE-22-74	Fuse (.6 Amp.) (500 V.)	2
25	FE-22-86	Fuse - Time Delay (.8 Amp.) (SOO V.)	2
26	114707	Fuse Board	1
27	WL-IO-l	Lock Washer - #8 Ext. Shakeproof	1
28	SC-27-29	Mach. Screw - #8-32 x 3/8" Rd. Hd	1
29	WL-6-28	Lock Washer - 3/8" Medium	4
30	NS-15·13	Full Nut - 3/8"-16 Hex Fin	4
31	118544-3	Lug - Solderless	1

*Give Elec. Spec., Mach. Model & Motor Type

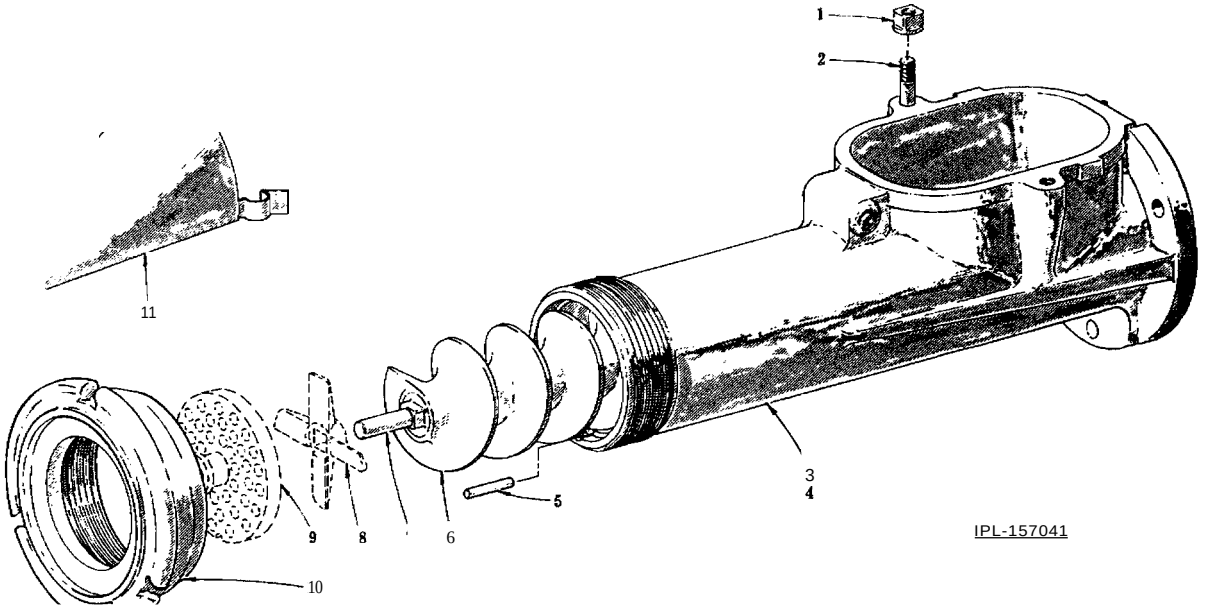

#56 GRINDER UNIT

ILLUS. PL-15704	PART NO.	NAME OF PART	AMT.
1	M-69862	Nut - Cylinder	2
2	M-8378S	Stud - Conveyor Screw Chamber Mtg	2
3	A-I03254-1	Grinder Cylinder Assy. (Spiral Flute) (lncis. items #2 & 5)	1
4	A-I032S4-3	Grinder Cylinder Assy. (Straight Flute) (Not Shown) (incIs. items #2 & 5)	1
5	C-113448·259	Dowel	1
6	C-124820	Worm Assy. (Incls. item #7)	1
7	R-70388	Stud	1
8	*	Knife - Grinder	1
9	*	Plate - Grinder	1
10	R-87299	Ring - Adjusting	1
11	R-80748	Deflector Assy	1

*Sharp, high quality knives and plates should be purchased or rented for this grinder.

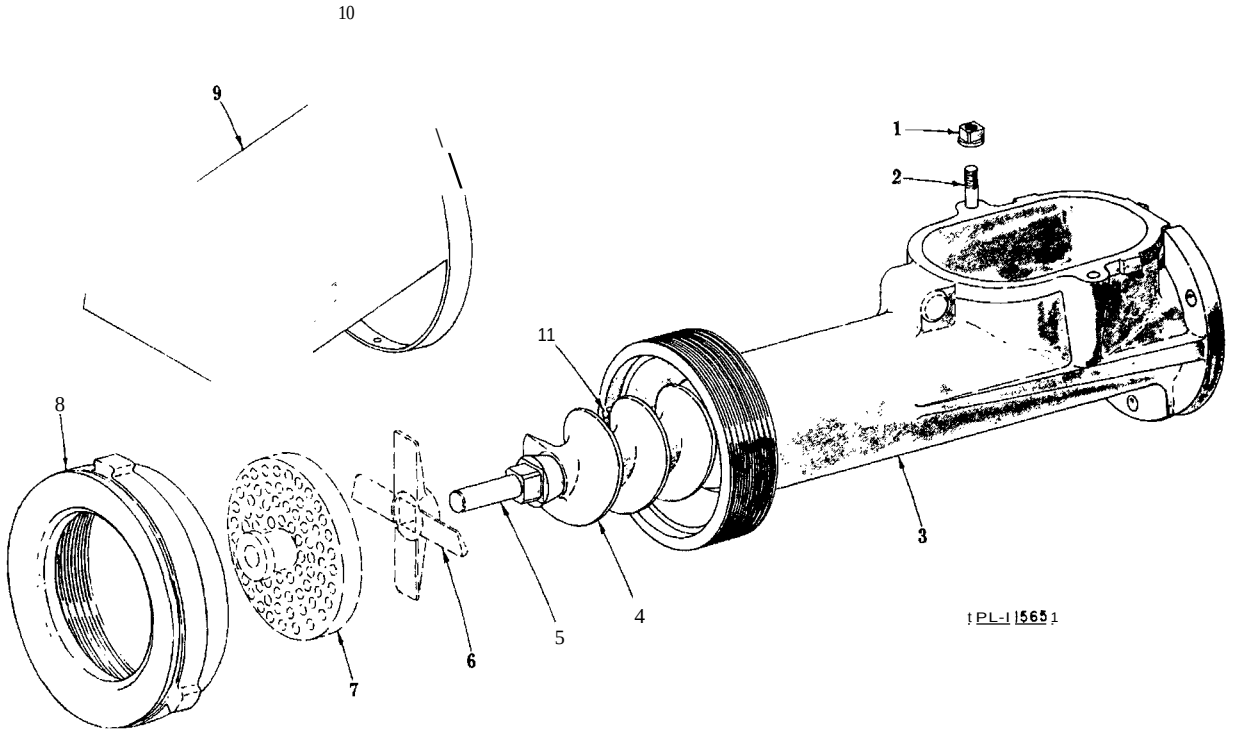

#66 GRINDER UNIT

ILLUS. PL-11665	PART NO.	NAME OF PART	AMT.
1	M-69862	Nut - Cylinder	2
2	M-83785	Stud-Conveyor Screw Chamber Mtg	2
3	A-I03254-2	Grinder Cylinder Assy. (Incls.o items #2 & 11)	1
4	C-124819	Worm Assy. (Incls. item #5)	1
5	C-I04039	Stud	1
6	*	Knife - Grinder	1
7	*	Plate - Grinder	1
8	D-I03141	Ring - Adjusting	1
9	0-103293	Deflector Assy. (Incls. item # 10)	1
10	C-I08197-12	Thumb Screw	1
11	D-113448-318	Dowel	1

*Sharp, high quality knives and plates should be purchased or rented for this grinder.

INSTALLATION DIAGRAM

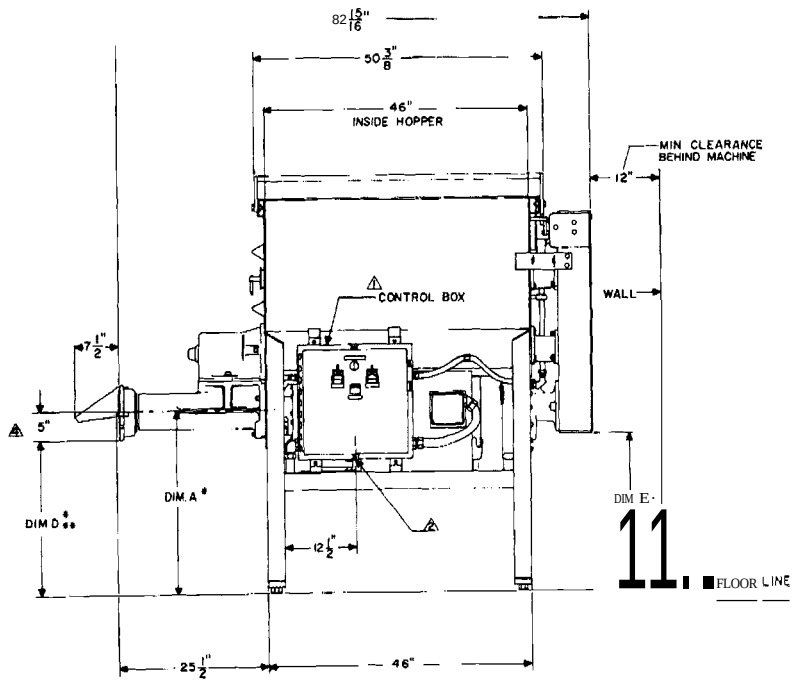

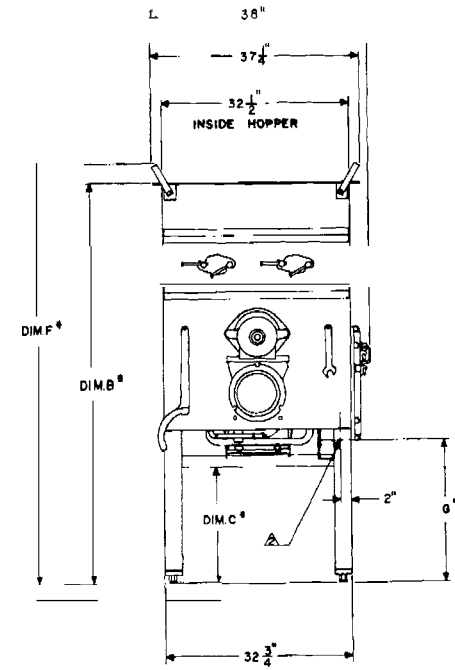

NOTES

1. CONTROL SOX POSITIONED AT THIS LOCATION ON THIS SIDE FOR A R.H. MACHINE. ON OPPOSITE SIDE FOR A LH. MACHINE
2. 1-3/8" OIA HOLE FOR I" CONDUIT FITTING
   WARNING. ELECTRICAL & GROUNDING CONNECTIONS MUST COMPLY WITH THE APPLICABLE PORTIONS OF THE NATIONAL ELECTRICAL CODE AND/OR OTHER LOCAL ELECTRICAL CODES.
3. THE #66 ADJUSTING RING DIMENSION IS 6-5/8".

DIM. A	DIM. B	DIM. C	DIM. D	DIM. E	DIM. F	DIM. G
35-1/2"	70-1/4"	20-7/16"	28-1/2"	28-11/16"	74-1/16"	25"
36-1/2"	73-1/4"	23-7/16"	31-1/2"	31-11/16"	77-1/16"	28"

SPECIAL LENGTH LEGS AVAILABLE ON REQUEST

* THESE DIMENSIONS MAY INCREASE 1-3/4" (BY ADJUSTING LEGS)

* ● THIS DIMENSION WILL DECREASE 1-5/8" WHEN USING A #66 ADJUSTING RING.

HOBART!
TROY, OHIO 45374

PL-19433
PRODUCTION NO E-29149?