HOBART

INSTRUCTION MANUAL

... with Replacement Parts

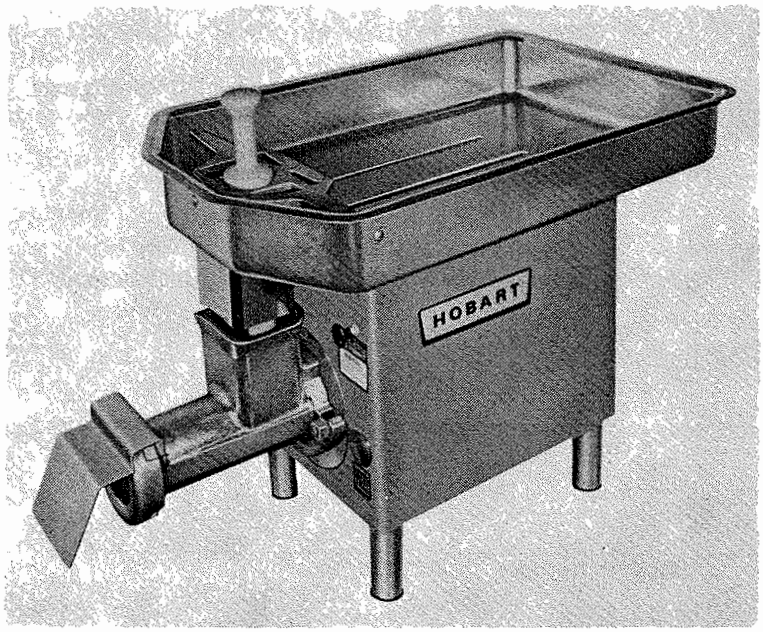

MODELS 4632 & 4732 CHOPPERS

(INCLUDES MOTOR PARTS)

ML-18885 - 4632 (Painted)
ML-19281 - 4632 (SST)
ML-18887 - 4732 (Painted)
ML-19282 - 4732 (SST)

A product of HOBART CORPORATION TROY, OHIO 45374

FORM 11213E (Rev. 10-81) (Supsds. F. 11213D)

Installation, Operation and Care of MODELS 4632 & 4732 CHOPPER

Save These Instructions

GENERAL

The model 4632 Chopper is designed to grind 35-40 pounds of fresh meat per minute through a 1/8" plate. It uses a 2 H.P., Hobart-built motor and is available for single- or three-phase electrical service.

The model 4732 Chopper is designed to grind 35-40 pounds of fresh or tempered frozen (above 24° F.) meat per minute through a 1/8" plate. It uses a 3 H.P., Hobart-built motor and is available for single- or three-phase electrical service.

Both models feature a tinned feed pan as standard equipment. An optional stainless steel feed pan is available.

INSTALLATION

NOTE: Immediately after unpacking, the machine should be checked for possible damage. If this machine is found to be damaged after unpacking, save the packing material and contact the shipper.

Remove the carton from around the machine. Remove the four bolts holding the machine to the skid. Unpack the feed stomper and plastic container labeled **Gear Case Oil.**

The worm retaining washer and rubber shipping pad, which are used for shipping purposes, must be removed and discarded before operation. Using the spanner wrench, loosen the adjusting ring. Unscrew and remove the adjusting ring (2, Fig. 1) with both hands. Remove the washer and shipping pad. These will be replaced by the knife and plate (not supplied) for operation.

The chopper must be thoroughly cleaned and sanitized after installation and before being put into service. See MAINTENANCE for instructions.

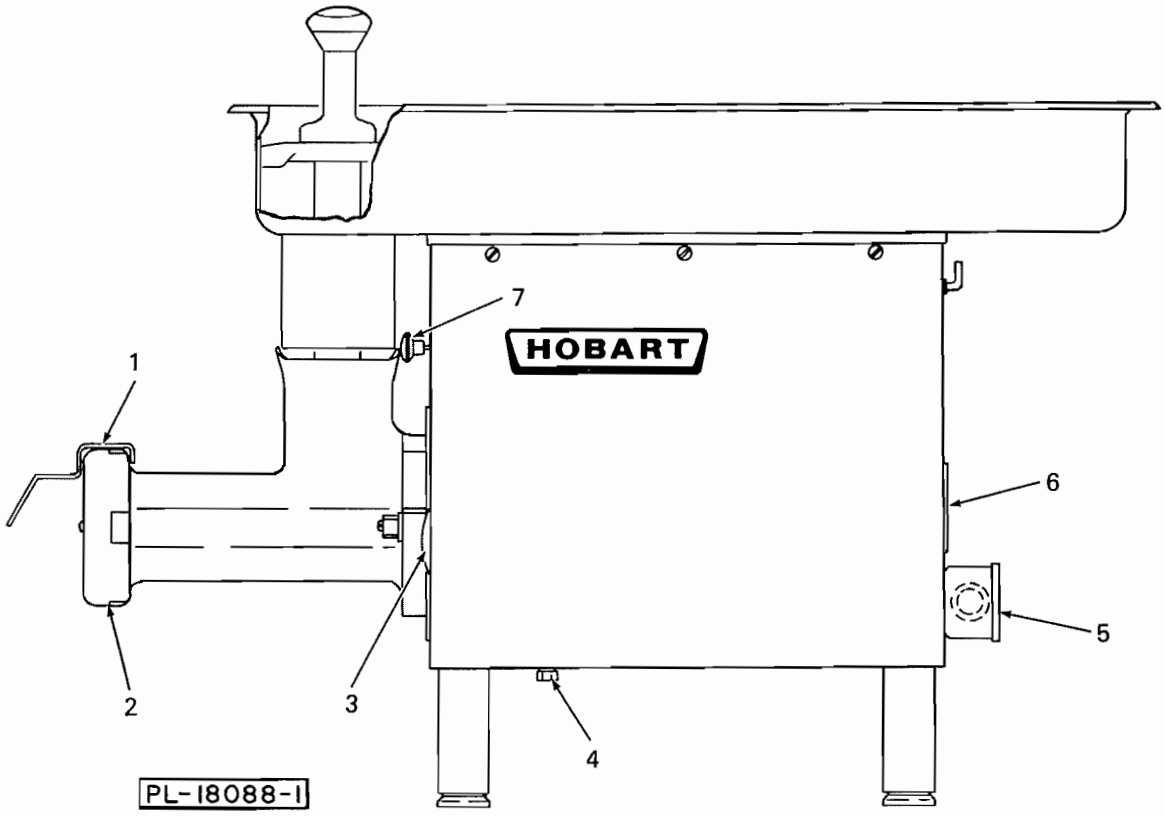

Fig. 1

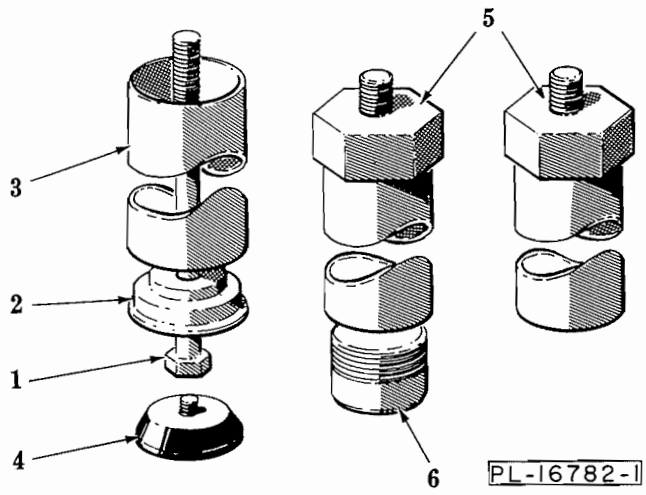

Fig. 2

LEGS

The four leg assemblies are packed in a separate carton for shipment.

Standard equipment includes 5-3/8" legs. These legs have neoprene feet and require assembly. To assemble, slide the leg stud (1, Fig. 2) through the leg end cap (2, Fig. 2) and leg (3, Fig. 2) and thread the stud into the base of the machine. Do not overtighten; the legs need only be hand-tight. Thread the neoprene foot (4, Fig. 2) into the leg stud.

Floor models are equipped with optional 15", 18", or 21" legs. Each leg is one piece and threads into the base of the machine. These legs can be adjusted by threading the feet in or out as necessary to level and stabilize the chopper.

GEAR CASE

There is no oil in the gear case when machine is shipped from the factory. Before the machine can be operated, the oil included with machine must be put in the gear case.

Remove the plug button (3, Fig. 1) and the plastic pipe plug (1, Fig. 3). Pour the entire contents of the plastic container labeled **Gear Case Oil** into the elbow. The gear case is full when the lubricant is at bottom thread level of the elbow. Thread the plastic pipe plug into the elbow finger-tight and press the plug button into the chopper housing.

ELECTRICAL CONNECTIONS

Before making electrical connections, check the specifications on the data plate (6, Fig. 1) to assure they agree with those of your electrical service.

WARNING: ELECTRICAL AND GROUNDING CONNECTIONS MUST COMPLY WITH THE APPLICABLE PORTIONS OF THE NATIONAL ELECTRICAL CODE AND/OR OTHER LOCAL ELECTRICAL CODES.

WARNING: DISCONNECT ELECTRICAL POWER SUPPLY AND PLACE A TAG AT THE DISCONNECT SWITCH INDICATING CIRCUIT IS BEING WORKED ON.

BRANCH CIRCUIT SIZE AND PROTECTION

MODEL 4632

DUAL ELEMENT TIME-DELAY FUSE

Volts	Phase	Minimum Circuit Ampacity	Maximum Fuse Size	60°C Copper Wire Size
200	1	25	25	#10
230	1	20	20	#12
200	3	15	15	#14
230	3	15	15	#14
460	3	15	10	#14

INVERSE TIME CIRCUIT BREAKER

Volts	Phase	Minimum Circuit Ampacity	Maximum Ckt. Bkr. Size	60°C Copper Wire Size
200	1	35	35	# 8
230	1	30	30	#10
200	3	20	20	#12
230	3	20	20	#12
460	3	15	10	#14

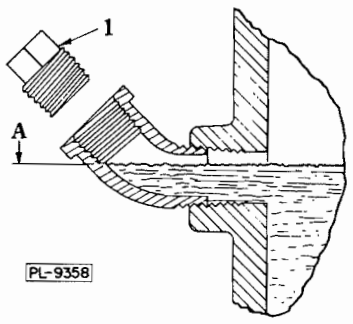

Fig. 3

BRANCH CIRCUIT SIZE AND PROTECTION

MODEL 4732

DUAL ELEMENT TIME-DELAY FUSE

Volts	Phase	Minimum Circuit Ampacity	Maximum Fuse Size	60°C Copper Wire Size
200	1	30	30	#10
230	1	30	30	#10
200	3	15	15	#14
230	3	15	15	#14
460	3	15	10	#14

INVERSE TIME CIRCUIT BREAKER

Volts	Phase	Minimum Circuit Ampacity	Maximum Ckt. Bkr. Size	60°C Copper Wire Size
200	1	45	45	# 6
230	1	45	45	# 6
200	3	25	25	#10
230	3	25	25	#10
460	3	15	10	#14

NOTE: The above information compiled in accordance with the National Electrical Code, 1981 edition.

The junction box (5, Fig. 1), which is tapped for 3/4" conduit, may be rotated 180° for convenience of installation.

Three-phase machines must be connected so that the attachment drive runs counterclockwise when facing the hub.

To check the direction of rotation, turn the power disconnect switch ON and momentarily energize machine.

If rotation is incorrect, **DISCONNECT ELECTRICAL POWER SUPPLY** and interchange any two of the power supply leads.

Energize machine momentarily to verify correct motor rotation.

OPERATION

The meat deflector (1, Fig. 1) should be placed over the adjusting ring.

Cut the meat into chunks about the size of a fist and place in feed pan.

The fineness of cut depends on the size of holes in the chopper plate. The knife and plate must be kept clean and sharp for a fine cut.

The tightness of the adjusting ring does not regulate fineness of cut; therefore only moderate tightness is recommended. The adjusting ring (2, Fig. 1) should be only hand-tight.

Start machine by pulling the START–STOP switch knob (7, Fig. 1). Feed meat under the guard and into the feed pan opening.

WARNING: NEVER PLACE HANDS INTO FEED PAN OPENING. USE THE FEED STOMPER.

The feed stomper should be used to dislodge over-sized pieces, and to dislodge meat which may become stuck in the feed pan opening or cylinder opening. It is NOT necessary to force meat through the chopper.

When the product is run through the chopper a second time, more speed is attained by feeding small quantities at a time. Allow the machine to feed at its own pace.

MAINTENANCE

WARNING: DISCONNECT ELECTRICAL POWER SUPPLY AND PLACE A TAG AT DISCONNECT SWITCH INDICATING CIRCUIT IS BEING WORKED ON BEFORE BEGINNING ANY MAINTENANCE PROCEDURE.

CLEANING

The chopper should be thoroughly cleaned at the end of each day or anytime machine is not to be used for an extended period of time.

To disassemble for cleaning, **DISCONNECT ELECTRICAL POWER SUPPLY.** Pull the meat deflector straight up to remove it. Using the spanner wrench, loosen the adjusting ring. Unscrew and remove adjusting ring with both hands. Place in sink for cleaning.

Hook the spanner wrench around the plate stud and pull the worm end out of cylinder. Remove the knife and plate and then the worm. Take parts to sink for cleaning.

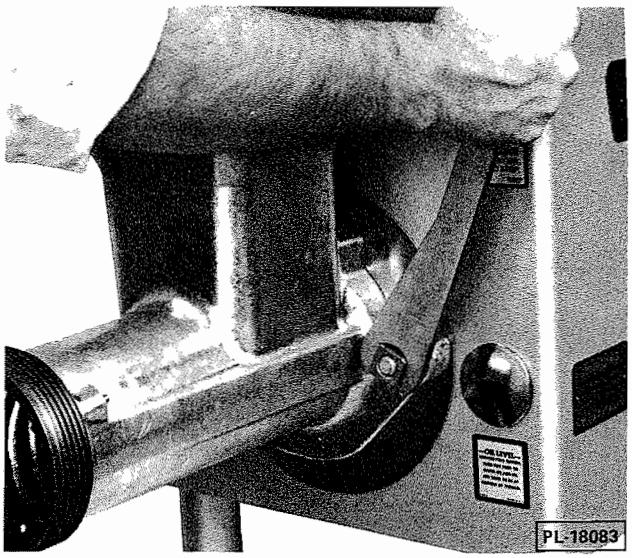

Fig. 4

Using the spanner wrench, loosen but do not remove the cylinder nuts (Fig. 4). With one hand on bottom of cylinder for support (it's heavy), turn cylinder clockwise and remove to sink.

The feed pan is permanently attached to the machine and is designed to be cleaned in place. To clean the feed pan, place a bucket under the feed chute of the pan and thoroughly clean using hot soapy water. After rinsing, the pan should be sanitized.

Thoroughly clean all removed parts in a sink, using hot soapy water, and sanitize them. Wipe machine housing with a damp cloth.

Prior to reassembly, a light coating of tasteless mineral oil should be applied to the inside of cylinder, the threads on cylinder and adjusting ring, the worm edges, the knife and plate, and any other exposed (non-plated) metal surfaces.

To reassemble the machine, first install the cylinder. With the cylinder in position (Fig. 5), rotate it counterclockwise until the ears are under the cylinder nuts. Tighten the cylinder nuts finger-tight.

Slide the worm into the cylinder and rotate it to engage the square shank with the attachment drive.

With the spanner wrench, tighten the cylinder nuts. **CAUTION: Do not over-tighten the cylinder nuts.**

Install the knife (cutting edges out) and plate, and screw the adjusting ring on hand-tight.

Store the feed stomper as illustrated in Fig. 1.

LUBRICATION

During normal operation, gear case oil may require changing due to condensate mixing with the oil. When oil has water in it, it will appear as a milky brown color and should be changed.

To change gear case oil, place a suitable catch pan under the machine, and remove the drain plug (4, Fig. 1). When old oil is completely drained, replace the drain plug. Fill the gear case with 21 ounces of Gearep 140 as outlined in GEAR CASE under INSTALLATION.

The chopper requires no other lubrication maintenance.

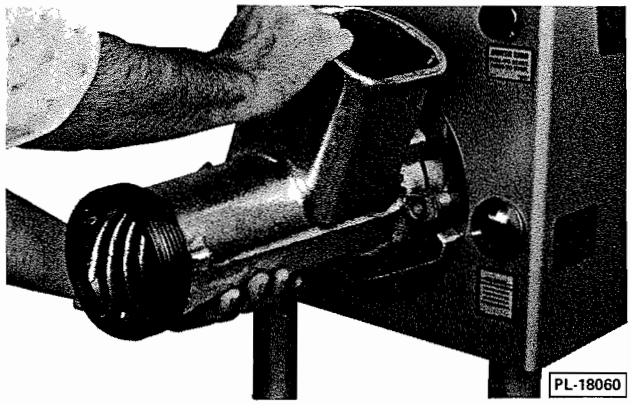

Fig. 5

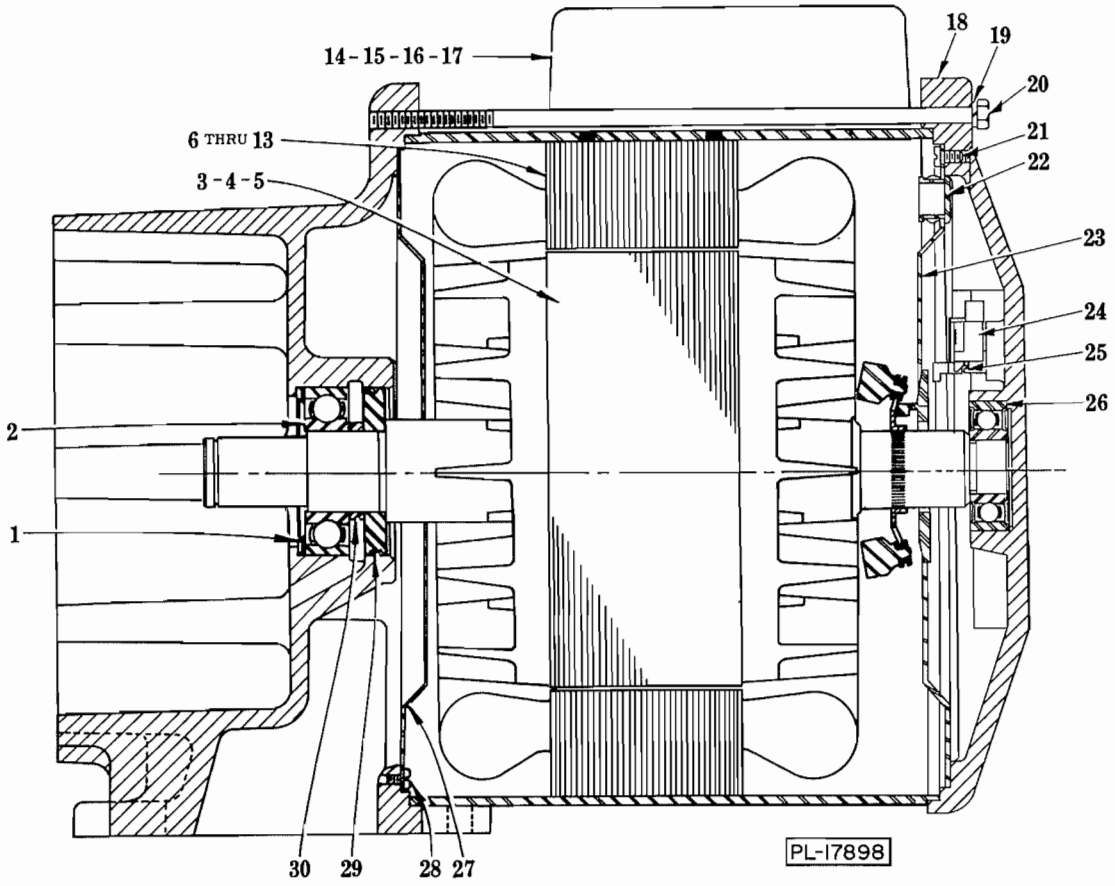

MOTOR UNIT
(4632)

MOTOR UNIT
(4632)

ILLUS. PL-17898	PART NO.	NAME OF PART	AMT.
1	SL-3-10	Loading Spring - N.D. #62	1
2	BB-6-26	Ball Bearing - N.D. #3206	1
*3	C-22275-230	Rotor Assy. (60 Hz.)	1
*4	C-22275-231	Rotor Assy. (50 Hz.)	1
**5	P-15747-263	Rotor Assy. (50/60 Hz.)	1
*6	D-65477-111-1	Stator Assy. (200 V., 60 Hz.)	1
*7	D-65477-111-2	Stator Assy. (230 V., 60 Hz.)	1
*8	D-65744-111-3	Stator Assy. (220 V., 50 Hz.)	1
**9	D-65478-142-1	Stator Assy. (200 V., 60 Hz.)	1
**10	D-65478-142-2	Stator Assy. (230/460 V., 60 Hz.)	1
**11	D-65478-139-1	Stator Assy. (220/380/415 V., 50 Hz.)	1
*12	M-79118	Bushing - Snap	3
**13	M-79118	Bushing - Snap	1
*14	P-70487-6	Capacitor	2
*15	M-89258	Retainer - Capacitor	2
*16	B-104725	Capacitor Cover & Insulator Assy	2
*17	SD-15-27	Self-Tapping Screw - #10-24 x 5/16" Pan Hd. "Taptite"	4
18	E-89188-1	Bracket - Bearing	1
19	WL-3-38	Lock Washer - 1/4" Medium	4
20	M-80977-3	Cap Screw - 1/4"-28 x 8-3/8" Hex Hd	4
*21	SC-18-13	Mach. Screw - #8-32 x 1/4" Pan Hd	4
*22	M-80369	Bushing - Snap	1
*23	R-89203-1	Shroud - Fan	1
*24	C-114514	Starting Switch (Stationary Part)	1
*25	SC-9-67	Mach. Screw - #6-32 x 5/8" Rd. Hd	2
26	BB-5-46	Ball Bearing - N.D. #77504	1
27	R-89203-1	Shroud - Fan	1
28	SC-18-13	Mach. Screw - #8-32 x 1/4" Pan Hd	4
29	M-85960	Deflector - Grease	1
30	M-85959	Spacer - Motor Bearing	1

*1 Phase.
**3 Phase.

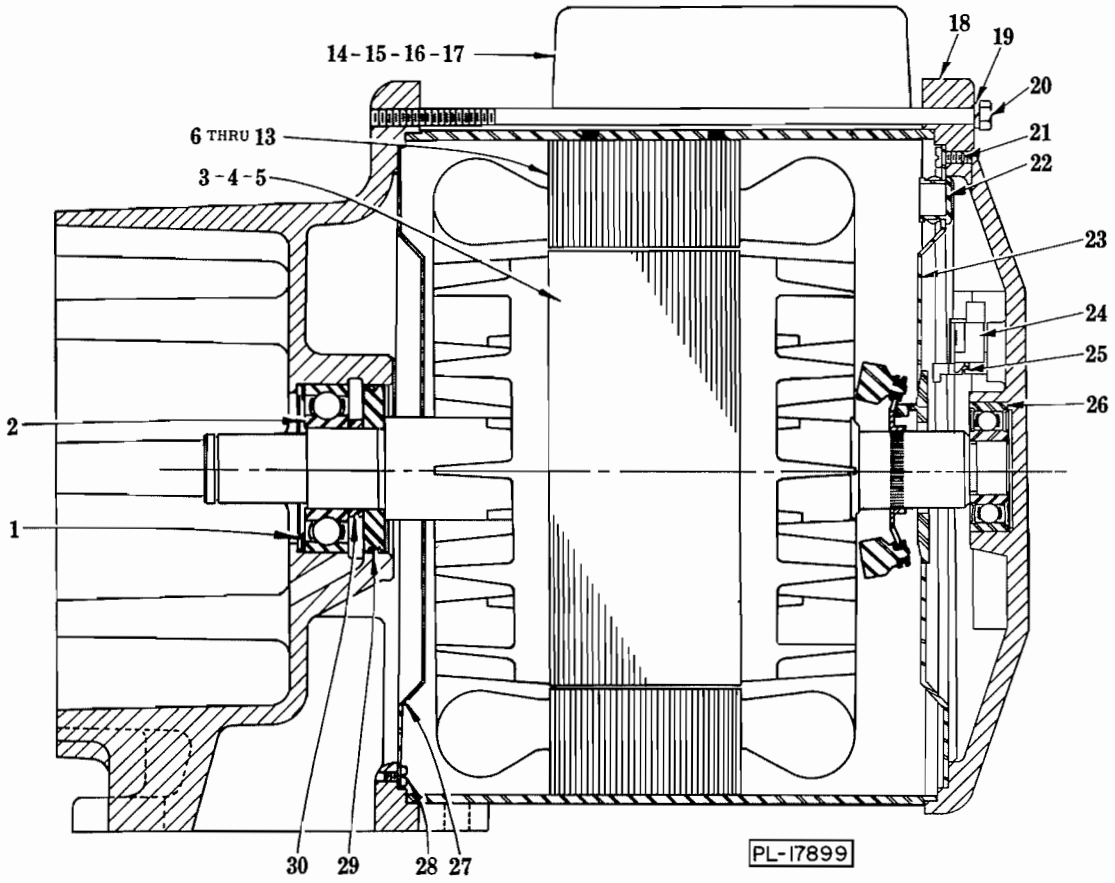

MOTOR UNIT
(4732)

MOTOR UNIT
(4732)

ILLUS. PL-17899	PART NO.	NAME OF PART	AMT.
1	SL-3-10	Loading Spring – N.D. #62	1
2	BB-6-26	Ball Bearing - N.D. #3206	1
*3	C-22275-232	Rotor Assy. (60 Hz.)	1
*4	C-22275-233	Rotor Assy. (50 Hz.)	1
**5	P-15747-264	Rotor Assy. (50/60 Hz.)	1
*6	D-65477-112-1	Stator Assy. (200 V., 60 Hz.)	1
*7	D-65477-112-2	Stator Assy. (230 V., 60 Hz.)	1
*8	D-65477-112-3	Stator Assy. (220 V., 50 Hz.)	1
**9	D-65478-141-1	Stator Assy. (200 V., 60 Hz.)	1
**10	D-65478-141-2	Stator Assy. (230/460 V., 60 Hz.)	1
**11	D-65478-140-1	Stator Assy. (220/380/415 V., 50 Hz.)	1
*12	M-79118	Bushing - Snap	3
**13	M-79118	Bushing - Snap	1
*14	P-70487-9	Capacitor	2
*15	M-89258	Retainer - Capacitor	2
*16	B-104722	Capacitor Cover & Insulator Assy	2
*17	SD-15-27	Self-Tapping Screw - #10-24 x 5/16" Pan Hd. "Taptite"	4
18	E-89188-1	Bracket - Bearing	1
19	WL-3-38	Lock Washer - 1/4" Medium	4
20	M-80977-3	Cap Screw - 1/4"-28 x 8-3/8" Hex Hd	4
*21	SC-18-13	Mach. Screw - #8-32 x 1/4" Pan Hd	4
*22	M-80369	Bushing - Snap	1
*23	R-89203-1	Shroud - Fan	1
*24	C-114514	Starting Switch (Stationary Part)	1
*25	SC-9-67	Mach. Screw - #6-32 x 5/8" Rd. Hd	2
26	BB-5-46	Ball Bearing - N.D. #77504	1
27	R-89203-1	Shroud - Fan	1
28	SC-18-13	Mach. Screw - #8-32 x 1/4" Pan Hd	4
29	M-85960	Deflector - Grease	1
30	M-85959	Spacer - Motor Bearing	1

*1 Phase.
**3 Phase.

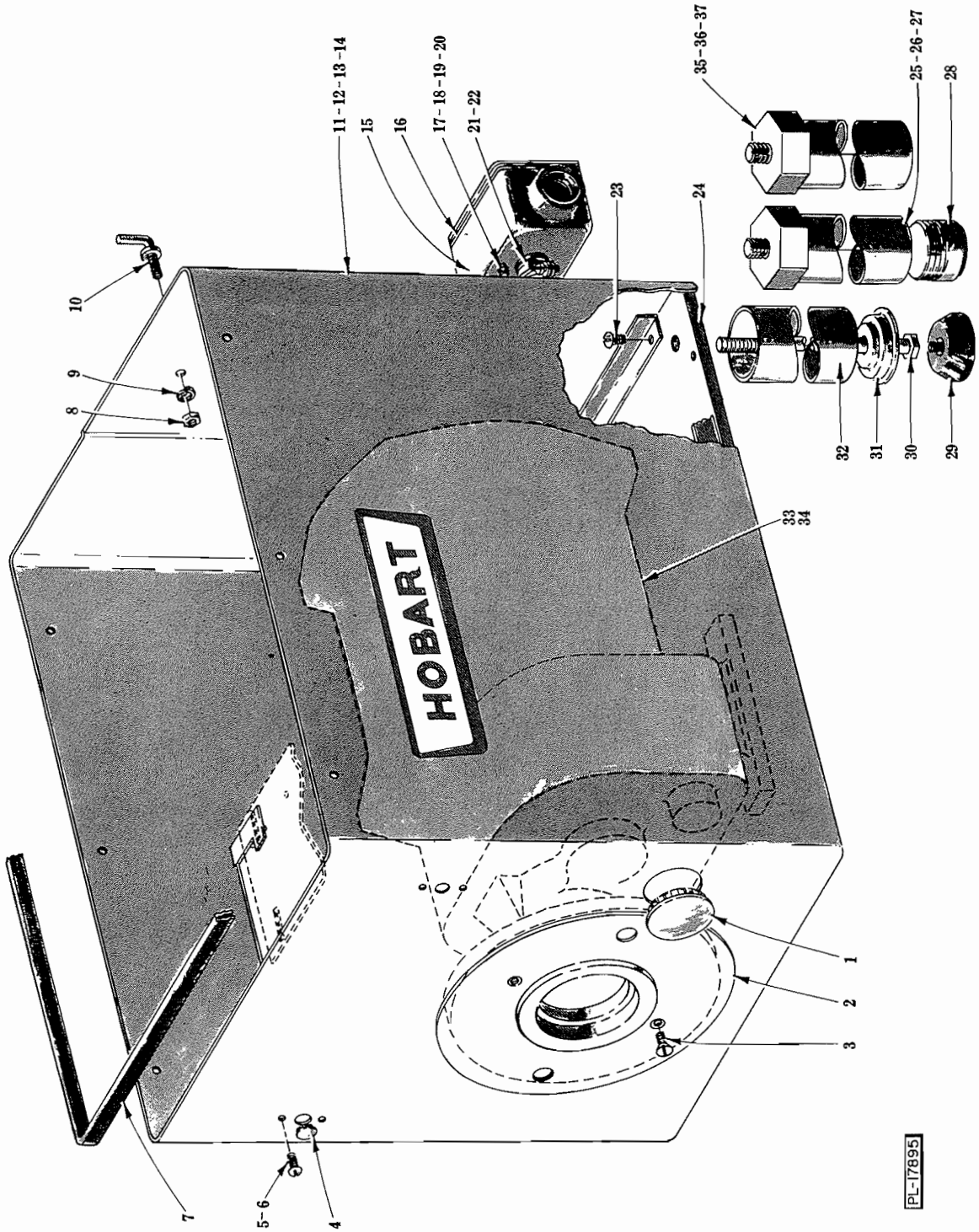

HOUSING UNIT

HOUSING UNIT

ILLUS. PL-17895	PART NO.	NAME OF PART	AMT.
1	PB-2-14	Plug Button (2")	1
2	P-86348	Plate - Trim	1
3	SC-22-19	Mach. Screw - #10-24 x 1/2" Flat Hd	2
4	PB-2-8	Plug Button (25/64")	1
5	SC-10-36	Mach. Screw - #10-24 x 5/8" Truss Hd	2
6	NS-9-22	Mach. Nut - #10-24 Hex	2
7	A-102825-1	Gasket - Housing	1
8	NS-13-2	Full Nut - 1/4"-20 Hex Fin	1
9	WL-3-38	Lock Washer - 1/4" Medium	1
10	M-86165	Screw - Spanner Wrench Support	1
11	C-290481-4	Housing Assy. (Painted) (60 Hz.)	1
12	C-290481-5	Housing Assy. (Painted) (50 Hz.)	1
13	C-290481-6	Housing Assy. (SST) (60 Hz.)	1
14	C-290481-7	Housing Assy. (SST) (50 Hz.)	1
15	P-69853	Box - Junction	1
16	FE-4-21	Cover - Junction Box (With Gasket)	1
17	NS-9-30	Mach. Nut - #10-32 Hex	1
18	WL-7-12	Lock Washer - #10 Ext. Shakeproof	2
19	SC-60-87	Mach. Screw - #10-32 x 3/4" Rd. Hd	1
20	C-118544-1	Lug - Solderless	1
21	FE-2-33	Connector - Straight (3/4" Male Thd. x 3/4" Flex. Cnd.)	1
22	FE-7-12	Lock Nut - 3/4" Cnd	1
23	SC-8-10	Mach. Screw - #10-24 x 1/2" Rd. Hd	8
24	E-116549	Plate - Base	1
25	D-290395-1	Adjustable Leg Assy. (15") (Incls. item #28)	4
26	D-290395-2	Adjustable Leg Assy. (18") (Incls. item #28)	4
27	D-290395-3	Adjustable Leg Assy. (21") (Incls. item #28)	4
28	A-119237	Foot - Adjustable (Leg)	4
29	M-83681	Foot - Rubber	4
30	B-290061-1	Stud - Leg	4
31	M-64814	Cap - End (Leg)	4
32	B-290060-1	Leg - Standard (5-3/8") (SST)	4
33	ML-34174	Motor (4632 Chopper) (Give Elec. Spec.)	1
34	ML-34173	Motor (4732 Chopper) (Give Elec. Spec.)	1
*35	---	Leg Assy. (15")	3
*36	---	Leg Assy. (18")	3
*37	---	Leg Assy. (21")	3

*Parts #35, 36 & 37 Stationary Legs have been Discontinued, Order Adjustable Legs items #25, 26 & 27 as needed. Painted Legs have been Discontinued, Order 4 Adjustable Chrome Legs to Replace.

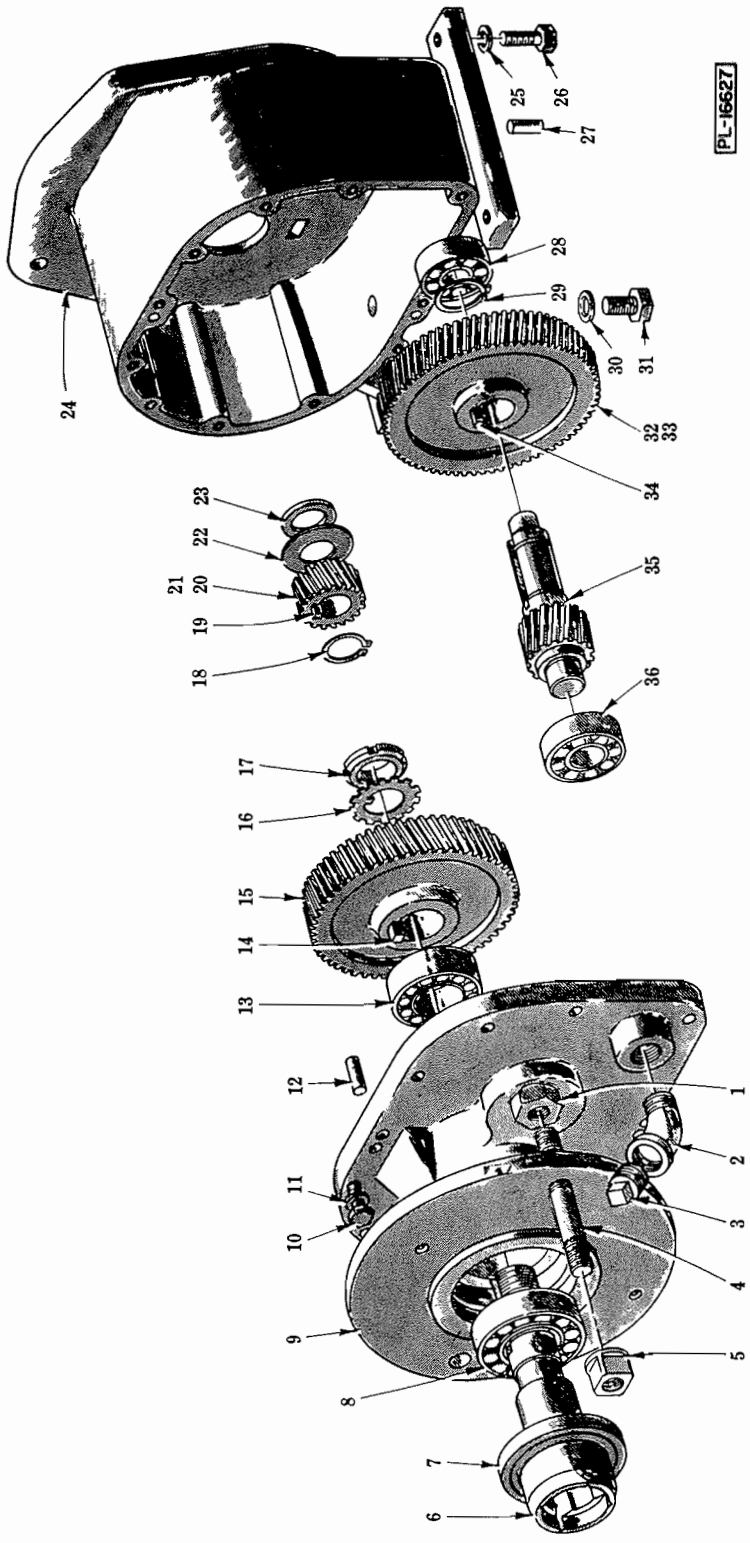

ATTACHMENT HUB AND TRANSMISSION UNIT

ATTACHMENT HUB AND TRANSMISSION UNIT

ILLUS. PL-16627	PART NO.	NAME OF PART	AMT.
1	NS-13-43	Full Nut - 5/8"-11 Hex Fin	2
2	FP-14-13	Elbow - 3/4" x 45° Street	1
3	C-88115-1	Plug - 3/4" Pipe	1
4	M-72981-3	Stud - Cylinder	2
5	M-69862	Nut - Cylinder	2
6	R-85891	Shaft - Square Drive	1
7	M-85961	Seal - Square Drive Shaft	1
8	BR-2-26	Roller Bearing - Cup & Cone Assy	1
9	T-85888	Hub - Attachment	1
10	SC-62-24	Cap Screw - 5/16"-18 x 1-1/2" Hex Hd	12
11	WL-3-45	Lock Washer - 5/16" Extra Heavy	12
12	D-11800-239	Dowel	2
13	BR-2-27	Roller Bearing - Cup & Cone Assy	1
14	C-109070-21	Key	1
15	R-89265	Gear - Chopper Drive (60T)	1
16	WL-12-7	Lock Washer - N.D. #W06	1
17	NS-34-7	Lock Nut - N.D. #N06	1
18	RR-7-22	Retaining Ring	1
19	C-109070-2	Key	1
20	C-85896-1	Gear - Motor Pinion (21T) (60 Hz.)	1
21	C-85896-2	Gear - Motor Pinion (24T) (50 Hz.)	1
22	M-85957	Flinger - Oil	1
23	M-89804	Spacer - Oil Flinger	1
24	T-116588	Case - Transmission	1
25	WL-4-4	Lock Washer - 3/8" Light	4
26	SC-62-42	Cap Screw - 3/8"-16 x 1" Hex Hd	4
27	D-11800-239	Dowel	2
28	BB-7-14	Ball Bearing - Fafnir #204K	1
29	RR-7-2	Retaining Ring	1
30	WS-21-20	Washer (Sealing)	1
31	SC-36-93	Cap Screw - 7/16"-20 x 3/4" Hex Hd	1
32	R-85892-1	Gear - Main Drive (68T) (60 Hz.)	1
33	R-85892-2	Gear - Main Drive (65T) (50Hz.)	1
34	R-12430-142	Key	1
35	R-89266	Shaft - Counter Pinion (17T)	1
36	BB-18-33	Ball Bearing - Fafnir #205K	1

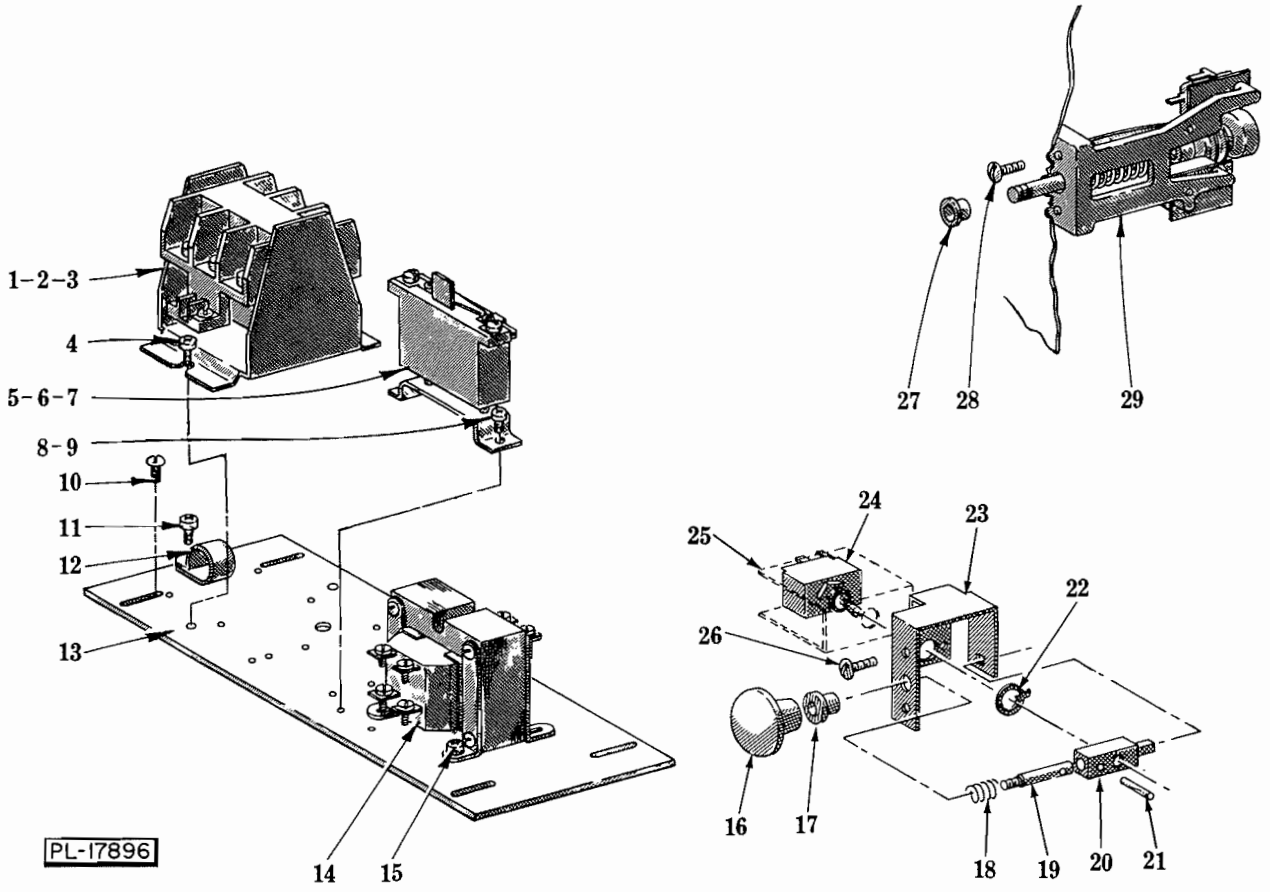

ELECTRICAL UNIT

ELECTRICAL UNIT

ILLUS. PL-17896	PART NO.	NAME OF PART	AMT.
1	B-121925-1	Contactor Assy. (200/230 V., 60 Hz.; 220 V., 50 Hz.) (2 Pole)	1
2	B-121926-1	Contactor Assy. (200/230 V., 60 Hz.; 220 V., 50 Hz.) (3 Pole)	1
3	B-121926-2	Contactor Assy. (115 V., 50/60 Hz., 3 Pole) (Pilot Circuit)	1
4	SD-15-20	Self-Tapping Screw - #10-32 x 3/8" Phil. Pan Hd. "Taptite"	2
*5	A-117127	Thermal Overload Relay & Screw Assy. (1 Ph.) (Incls. item #8)	1
*6	A-117127	Thermal Overload Relay & Screw Assy. (3 Ph.) (Incls. item #9)	3
*7	– – –	Heater Element - Overload Relay (Give Elec. Spec., Mach. Model & Motor Type)	AR
*8	SD-15-40	Self-Tapping Screw - #8-32 x 3/8" Phil. Pan Hd. "Taptite" (1 Ph.)	2
*9	SD-15-40	Self-Tapping Screw - #8-32 x 3/8" Phil. Pan Hd. "Taptite" (3 Ph.)	6
10	SC-9-56	Mach. Screw - #8-32 x 3/8" Rd. Hd	4
11	SD-15-40	Self-Tapping Screw - #8-32 x 3/8" Phil. Pan Hd. "Taptite"	1
12	M-78752-2	Clamp	1
13	D-113861	Panel - Control	1
14	B-101935	Transformer (200/220/230/380/415/460 V. to 115 V.)	1
15	SD-15-40	Self-Tapping Screw - #8-32 x 3/8" Phil. Pan Hd. "Taptite"	4
16	M-86163-1	Knob - Switch Shaft	1
17	M-80538-1	Bushing	1
18	B-121547	Spring - Compression	1
19	B-124781	Shaft - Switch	1
20	B-124780	Actuator - Switch	1
21	RP-3-6	Rollpin - 1/8" Dia. x 3/4" Lg	1
22	B-121827	Ring - Locking	1
23	C-123241-1	Bracket - Switch	1
24	B-120388	Switch & Label Assy	1
25	B-290058	Insulator - Switch	1
26	SC-10-36	Mach. Screw - #10-24 x 5/8" Truss Hd	2
27	M-80538-2	Bushing	1
28	SC-10-36	Mach. Screw - #10-24 x 5/8" Truss Hd	2
**29	– – –	Spool Switch Assy	1

*Use with Overload Protection.

**Part #29 has been Discontinued. Order C-290406 to Convert to New Style (Incls. items #17 thru 26.

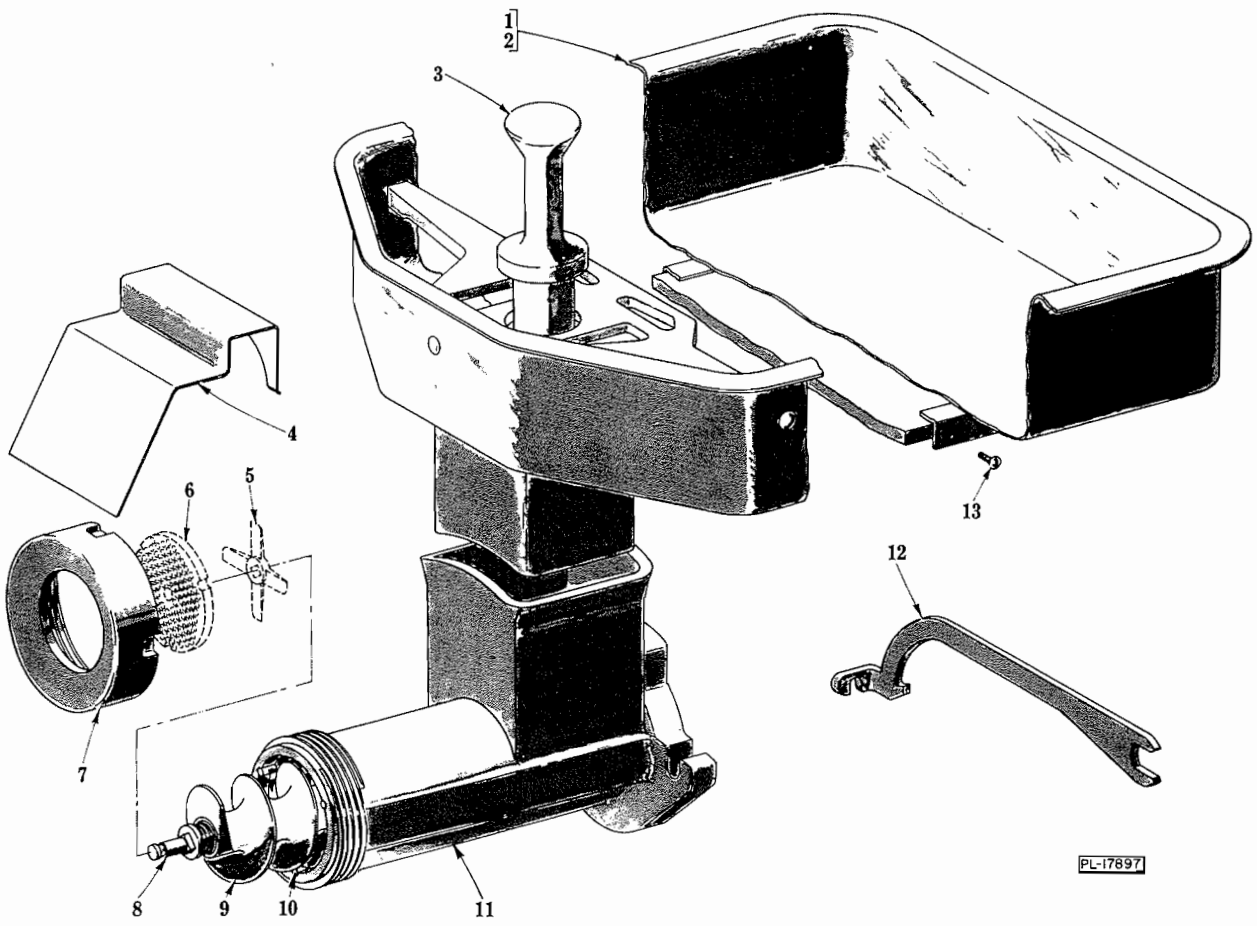

CHOPPER UNIT

ILLUS. PL-17897	PART NO.	NAME OF PART	AMT.
1	S-86421-1	Feed Pan, Guard & Insulator Assy. (SST)	1
2	S-86421-2	Feed Pan, Guard & Insulator Assy. (STL)	1
3	P-89272-23	Feed Stomper (Plastic)	1
4	R-86124	Deflector - Meat	1
*5	---	Knife - Chopper	1
*6	---	Chopper Plate	1
7	R-86050	Ring - Adjusting	1
8	C-110576	Stud - Plate	1
9	P-111825	Worm Assy. (Incls. item #8)	1
10	A-105806	Pin - Plate	3
11	M-87309-1	Chopper Cylinder Assy. (Incls. item #10)	1
12	R-88187	Wrench - Spanner	1
13	SC-10-36	Mach. Screw - #10-24 x 5/8" Truss Hd	6
	M-5176	Stuffer - Sausage (Hog Casing) (Not Shown)	1
	P-5194	Stuffer - Sausage (Sheep Casing) (Not Shown)	1

*Sharp, high quality knives and plates should be purchased or rented for this chopper.