CATALOG OF REPLACEMENT PARTS



Choppers ML 19686, ML 19689 (Painted), ML 19688, ML 9690 (SST)

A product of HOBART 701 S. RIDGE AVENUE TROY, OHIO 45374-0001

FORM 13228 Rev. A (February 2020)

 © HOBART 2020

Table of Contents

5 MOTOR UNIT (4632)
7 MOTOR UNIT (4732)
9 HOUSING UNIT
11 ATTACHMENT HUB AND TRANSMISSION UNIT
13 ELECTRICAL UNIT
15 CHOPPER UNIT

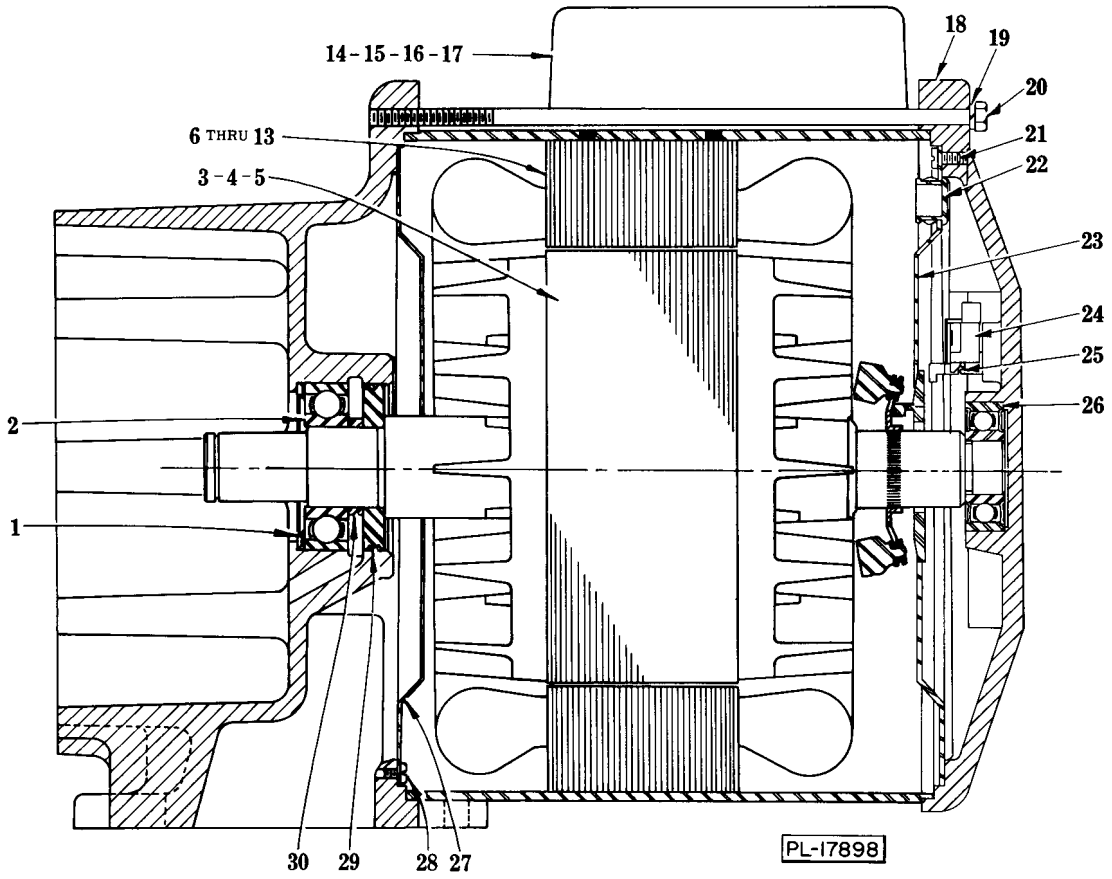

MOTOR UNIT (4632)

MOTOR UNIT (4632)

ILLUS. PL-17898	PART NO.	NAME OF PART	AMT.
1	SL-3-10	Loading Spring - N.D. #62	1
2	BB-6-26	Ball Bearing - N.D. #3206	1
*3	C-22275-230	Rotor Assy. (60 Hz.)	1
*4	C-22275-231	Rotor Assy. (50 Hz.)	1
**5	P-15747-263	Rotor Assy. (50/60 Hz.)	1
*6	D-65477-111-1	Stator Assy. (200 V., 60 Hz.)	1
*7	D-65477-111-2	Stator Assy. (230 V., 60 Hz.)	1
*8	D-65744-111-3	Stator Assy. (220 V., 50 Hz.)	1
**9	D-65478-142-1	Stator Assy. (200 V., 60 Hz.)	1
**10	D-65478-142-2	Stator Assy. (230/460 V., 60 Hz.)	1
**11	D-65478-139-1	Stator Assy. (220/380/415 V., 50 Hz.)	1
*12	M-79118	Bushing - Snap	3
**13	M-79118	Bushing - Snap	1
*14	P-70487-6	Capacitor	2
*15	M-89258	Retainer - Capacitor	2
*16	B-104725	Capacitor Cover & Insulator Assy	2
*17	SD-15-27	Self-Tapping Screw - #10-24 x 5/16" Pan Hd. "Taptite"	4
18	E-89188-1	Bracket - Bearing	1
19	WL-3-38	Lock Washer - 1/4" Medium	4
20	M-80977-3	Cap Screw - 1/4"-28 x 8-3/8" Hex Hd	4
*21	SC-18-13	Mach. Screw - #8-32 x 1/4" Pan Hd	4
*22	M-80369	Bushing - Snap	1
*23	R-89203-1	Shroud - Fan	1
*24	C-114514	Starting Switch (Stationary Part)	1
*25	SC-9-67	Mach. Screw - #6-32 x 5/8" Rd. Hd	2
26	BB-5-46	Ball Bearing - N.D. #77504	1
27	R-89203-1	Shroud - Fan	1
28	SC-18-13	Mach. Screw - #8-32 x 1/4" Pan Hd	4
29	M-85960	Deflector - Grease	1
30	M-85959	Spacer - Motor Bearing	1

* 1 Phase.
** 3 Phase

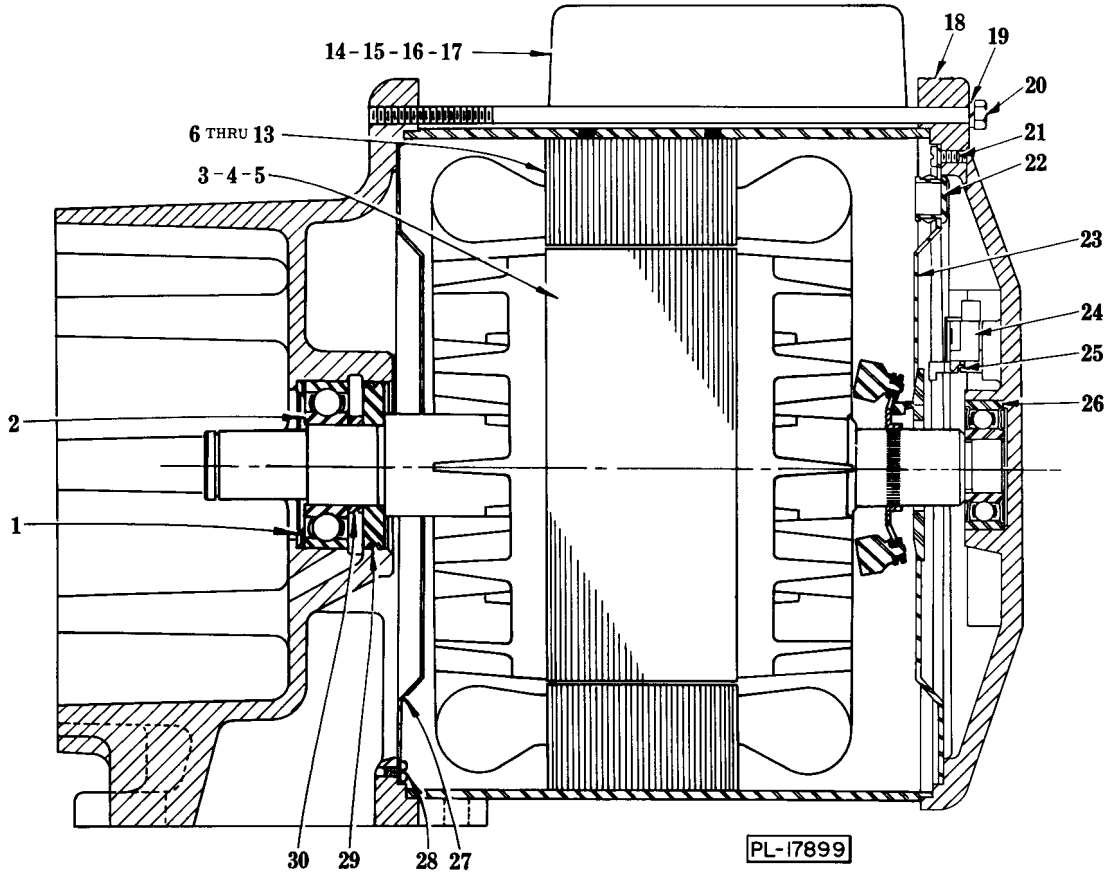

MOTOR UNIT (4732)

MOTOR UNIT (4732)

ILLUS. PL-17899	PART NO.	NAME OF PART	AMT.
1	SL-3-10	Loading Spring - N.D. #62	1
2	BB-6-26	Ball Bearing - N.D. #3206	1
*3	C-22275-232	Rotor Assy. (60 Hz.)	1
*4	C-22275-233	Rotor Assy. (50 Hz.)	1
**5	P-IS747-264	Rotor Assy. (50/60 Hz.)	1
*6	D-6S477-112-1	Stator Assy. (200 V., 60 Hz.)	1
*7	D-65477-112-2	Stator Assy. (230 V., 60 Hz.)	1
*8	D-65477-112-3	Stator Assy. (220 V., 50 Hz.)	1
**9	D-65478-141-1	Stator Assy. (200 V., 60 Hz.)	1
**10	D-65478-141-2	Stator Assy. (230/460 V., 60 Hz.)	1
**11	D-6S478-140-1	Stator Assy. (220/380/415 V., 50 Hz.)	1
*12	M-79118	Bushing - Snap	3
**13	M-79118	Bushing - Snap	1
*14	P-70487-9	Capacitor	2
*15	M-89258	Retainer - Capacitor	2
*16	B-104722	Capacitor Cover & Insulator Assy	2
*17	SD-15-27	Self-Tapping Screw - #10-24 x 5/16" Pan Hd. "Taptite"	4
18	E-89188-1	Bracket - Bearing	1
19	WL-3-38	Lock Washer - 1/4" Medium	4
20	M-80977-3	Cap Screw - 1/4"-28 x 8-3/8" Hex Hd	4
*21	SC-18-13	Mach. Screw - #8-32 x 1/4" Pan Hd	4
*22	M-80369	Bushing - Snap	1
*23	R-89203-1	Shroud - Fan	1
*24	C-114514	Starting Switch (Stationary Part)	1
*25	SC-9-67	Mach. Screw - #6-32 x 5/8" Rd. Hd	2
26	BB-S-46	Ball Bearing - N.D. #77504	1
27	R-89203-1	Shroud - Fan	1
28	SC-18-13	Mach. Screw - #8-32 x 1/4" Pan Hd	4
29	M-85960	Deflector - Grease	1
30	M-8S959	Spacer - Motor Bearing	1

* 1 Phase.
** 3 Phase.

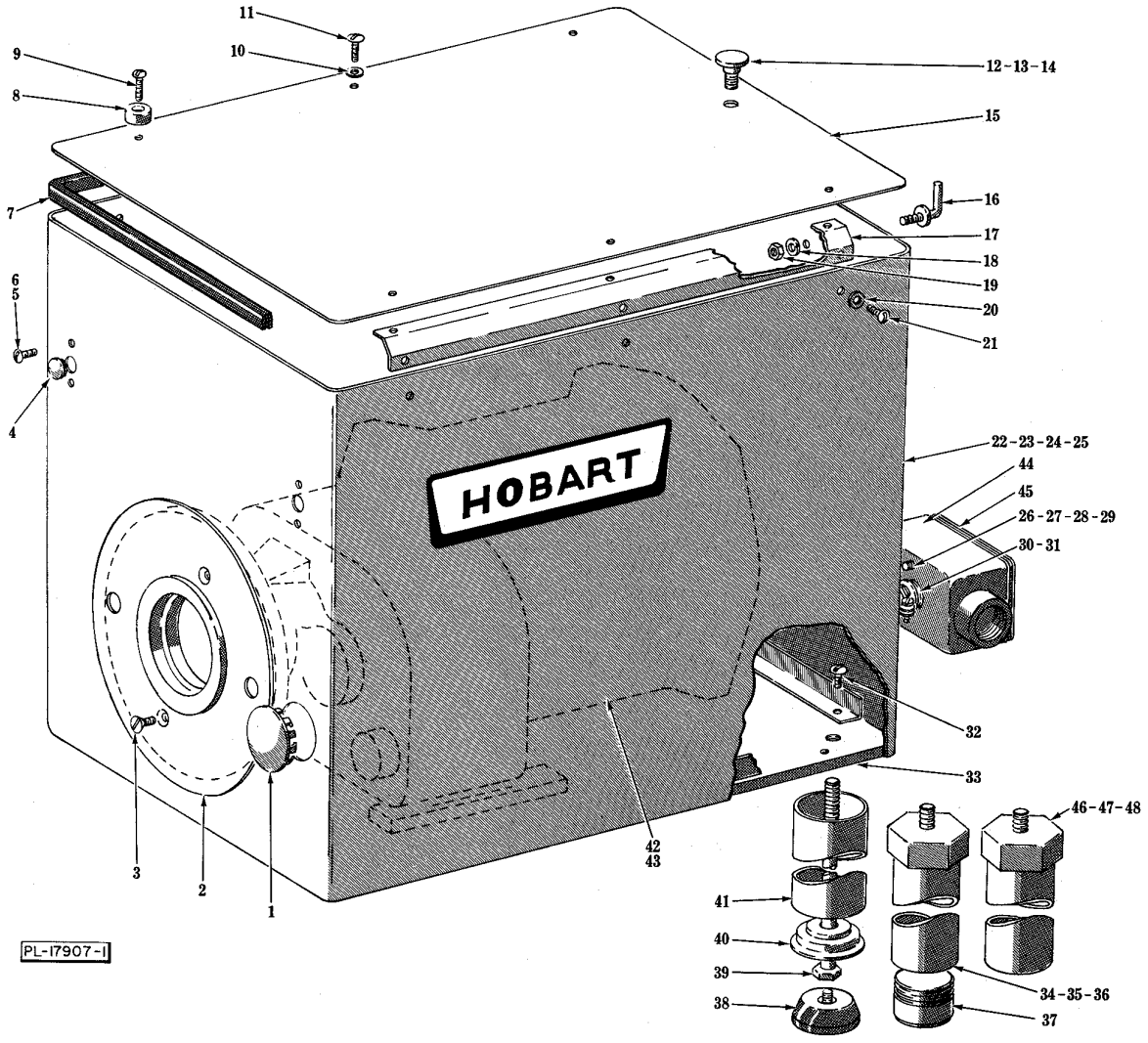

HOUSING UNIT

HOUSING UNIT

ILLUS. PL-17907-1	PART NO.	NAME OF PART	AMT.
1	PB-002-14	Plug Button (2")	1
2	P-86348	Plate - Trim	1
3	SC-22-19	Mach. Screw - #10-24 x 1/2" Flat Hd	2
4	PB-2-8	Plug Button (25/64")	1
5	SC-10-36	Mach. Screw - #10-24 x 5/8" Truss Hd	2
6	NS-9-22	Mach. Nut - #10-24 Hex	2
7	A-102825-1	Gasket - Housing	1
8	V-19105-2	Bumper (Pan Rest)	4
9	SC-21-25	Mach. Screw - #10-24 x 3/4" Rd. Hd	4
10	WS-19-10	Washer	2
11	SC-10-36	Mach. Screw - # 10-24 x 5/8" Truss Hd	2
12	B-124700	Post - Pan Anchor	1
13	WL-4-6	Lock Washer - 3/8" Medium	1
14	NS-13-25	Full Nut - 3/8"-16 Hex Fin	1
15	D-124702	Cover - Housing	1
16	M-86165	Screw - Spanner Wrench Support	1
17	D-124704	Cover Support & Weld Nut Assy	2
18	WL-3-38	Lock Washer - 1/4" Medium	1
19	NS-13-2	Full Nut - 1/4"-20 Hex Fin	1
20	WS-19-10	Washer	6
21	SC-10-36	Mach Screw - #10-24 x 5/8" Truss Hd	6
22	C-290481-9	Housing Assy. (Painted) (60 Hz.)	1
23	C-290481-11	Housing Assy. (Painted) (50 Hz.)	1
24	C-290481-8	Housing Assy. (SST) (60 Hz.)	1
25	C-290481-10	Housing Assy. (SST) (50 Hz.)	1
26	NS-9-30	Mach. Nut - #10-32 Hex	1
27	WL-7-12	Lock Washer - #10 Ext. Shakeproof	2
28	SC-60-87	Mach. Screw - #10-32 x 3/4" Rd. Hd	1
29	C-118544-1	Lug - Solderless	1
30	FE-2-33	Connector - Straight (3/4" Male Thd. x 3/4" Flex. Cnd.)	1
31	FE-7-12	Lock Nut - 3/4" Conduit	1
32	SC-8-10	Mach. Screw - # 1 0-24 x 1/2" Rd. Hd	8
33	E-116549	Plate - Base	1
34	D-290395-1	Adjustable Leg Assy. (15") (Chrome) (Incls. item #37)	4
35	D-290395-2	Adjustable Leg Assy. (18") (Chrome) (Incls. item #37)	4
36	D-290395-3	Adjustable Leg Assy. (21") (Chrome) (Incls. item #37)	4
37	A-119237	Foot - Adjustable (Leg)	4
38	M-83681	Foot - Rubber	4
39	B-290061-1	Stud (5-3/8" Leg)	4
40	M-64814	Cap - End (5-3/8" Leg)	4
41	B-290060-1	Leg - 5-3/8" (SST)	4
42	ML-34174	Motor (4632A Chopper) (Give Elec. Spec.)	1
43	ML-34173	Motor (4732A Chopper) (Give Elec. Spec.)	1
44	P-69853	Box - Junction	1
45	FE-4-21	Cover - Junction Box (With Gasket)	1
*46		Leg Assy. (15")(Chrome)	3
*47		Leg Assy. (18")(Chrome)	3
*48		Leg Assy. (21")(Chrome)	3

* Parts #46, 47 & 48 Stationary Legs have been Discontinued. Order adjustable Legs items #34, 35, 36 or 41 as needed. Painted Legs have been Discontinued. Order 4 Adjustable Chrome Legs to Replace.

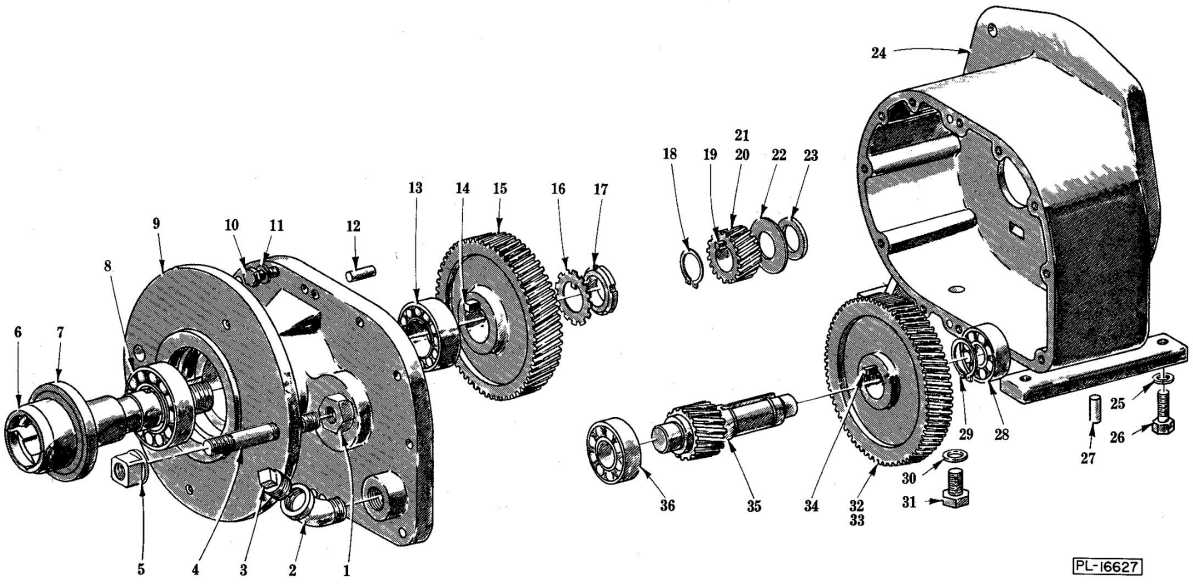

ATTACHMENT HUB AND TRANSMISSION UNIT

ATTACHMENT HUB AND TRANSMISSION UNIT

ILLUS. PL-16627	PART NO.	NAME OF PART	AMT.
1	NS-13-43	Full Nut - 5/8" -11 Hex Fin	2
2	FP-14-13	Elbow - 3/4" x 45 Degree Street	1
3	C-88115-1	Plug - 3/4" Pipe	1
4	M-72981-3	Stud - Cylinder	2
5	M-69862	Nut - Cylinder	2
6	R-85891	Shaft - Square Drive	1
7	M-85961	Seal - Square Drive Shaft	1
8	BR-2-26	Roller Bearing - Cup & Cone Assy	1
9	T-85888	Hub - Attachment	1
10	SC-62-24	Fin. Bolt - 5/16"-18 x 1-1/2" Hex Hd	12
11	WL-3-45	Lock Washer - 5/16" Extra Heavy	12
12	D-11800-239	Dowel	2
13	BR-2-27	Roller Bearing - Cup & Cone Assy	1
14	C-109070-21	Key	1
15	R-89265	Gear - Chopper Drive (60T)	1
16	WL-12-7	Lock Washer - N.D. #WO6	1
17	NS-34-7	Lock Nut - N.D. #NO6	1
18	RR-7-22	Retaining Ring	1
19	C-109070-2	Key	1
20	C-85896-1	Gear - Motor Pinion (21T) (60 Hz.)	1
21	C-85896-2	Gear - Motor Pinion (24T) (50 Hz.)	1
22	M-85957	Flinger - Oil	1
23	M-89804	Spacer - Oil Flinger	1
24	T-116588	Case - Transmission	1
25	WL-4-4	Lock Washer - 3/8" Light	4
26	SC-62-42	Fin. Bolt - 3/8"-16 x 1" Hex Hd	4
27	D-11800-239	Dowel	2
28	BB-7-14	Ball Bearing - Fafnir #204K	1
29	RR-9-2	Retaining Ring	1
30	WS-21-20	Washer (Sealing)	1
31	SC-36-93	Fin. Bolt - 7/16"-20 x 3/4" Hex Hd	1
32	R-85892-1	Gear - Main Drive (68T) (60 Hz.)	1
33	R-85892-2	Gear - Main Drive (65T) (5O Hz.)	1
34	R-12430-142	Key	1
35	R-89266	Shaft - Counter Pinion (17T)	1
36	BB-18-33	Ball Bearing - Fafnir #205K	1

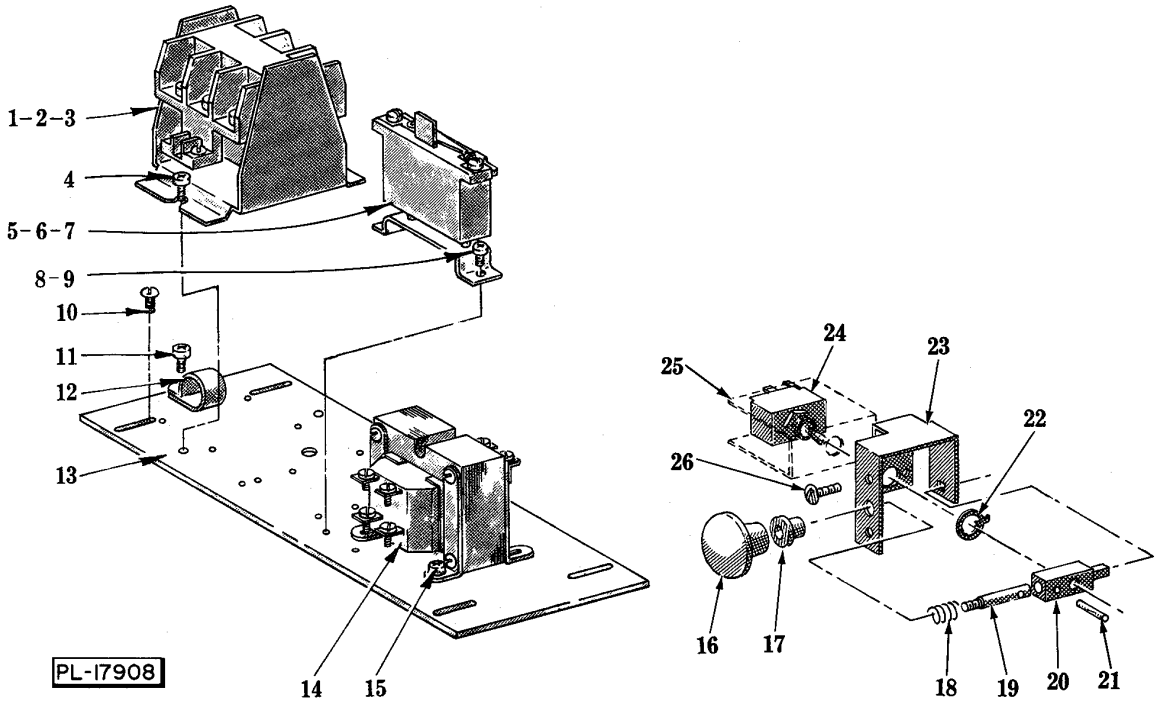

ELECTRICAL UNIT

ELECTRICAL UNIT

ILLUS. PL-17908	PART NO.	NAME OF PART	AMT.
1	B-121925-1	Contactor Assy. (200/230 V., 60 Hz.; 220 V., 50 Hz.) (2 Pole)	1
2	B-121926-1	Contactor Assy. (200/230 V., 60 Hz.; 220 V., 50 Hz.) (3 Pole)	1
3	B-121926-2	Contactor Assy. (115 V., 50/60 Hz., 3 Pole) (Pilot Circuit)	1
4	SD-15-20	Self-Tapping Screw - #10-32 x 3/8" Phil. Pan Hd. "Taptite"	2
*5	A-117127	Thermal Overload Relay & Screw Assy. (1 Ph.) (Incls. item #8)	1
*6	A-117127	Thermal Overload Relay & Screw Assy. (3 Ph.) (Incls. item #9)	3
*7		Heater Element - Overload Relay (Give Elec. Spec., Mach. Model & Motor Type)	AR
*8	SD-15-40	Self-Tapping Screw - #8-32 x 3/8" Phil. Pan Hd. "Taptite" (1 Ph.)	2
*9	SD-15-40	Self-Tapping Screw - #8-32 x 3/8" Phil. Pan Hd. "Taptite" (3 Ph.)	6
10	SC-9-56	Mach. Screw - #8-32 x 3/8" Rd. Hd	4
11	SD-15-40	Self-Tapping Screw - #8-32 x 3/8" Phil. Pan Hd. "Taptite"	1
12	M-78752-2	Clamp	1
13	D-113861	NLA - Obsolete--Panel - Control	1
14	B-101935	Transformer (200/220/230/380/415/460 V. to 115 V.)	1
15	SD-15-40	Self-Tapping Screw - #8-32 x 3/8" Phil. Pan Hd. "Taptite"	4
16	M-86163-1	Knob - Switch Shaft	1
17	M-80538-1	Bushing	1
18	B-121547	Spring - Compression	1
19	B-124781	Shaft - Switch	1
20	B-124780	Actuator - Switch	1
21	RP-3-6	RoUpin - 1/8" Dia. x 3/4" Lg	1
22	B-121827	Ring - Locking	1
23	B-123241-1	Bracket - Switch	1
24	B-120388	Switch & Label Assy	1
25	B-290058	Insulator - Switch	1
26	SC-10-36	Mach. Screw - #10-24 x 5/8" Truss Hd	2

* Use with Overload Protection.

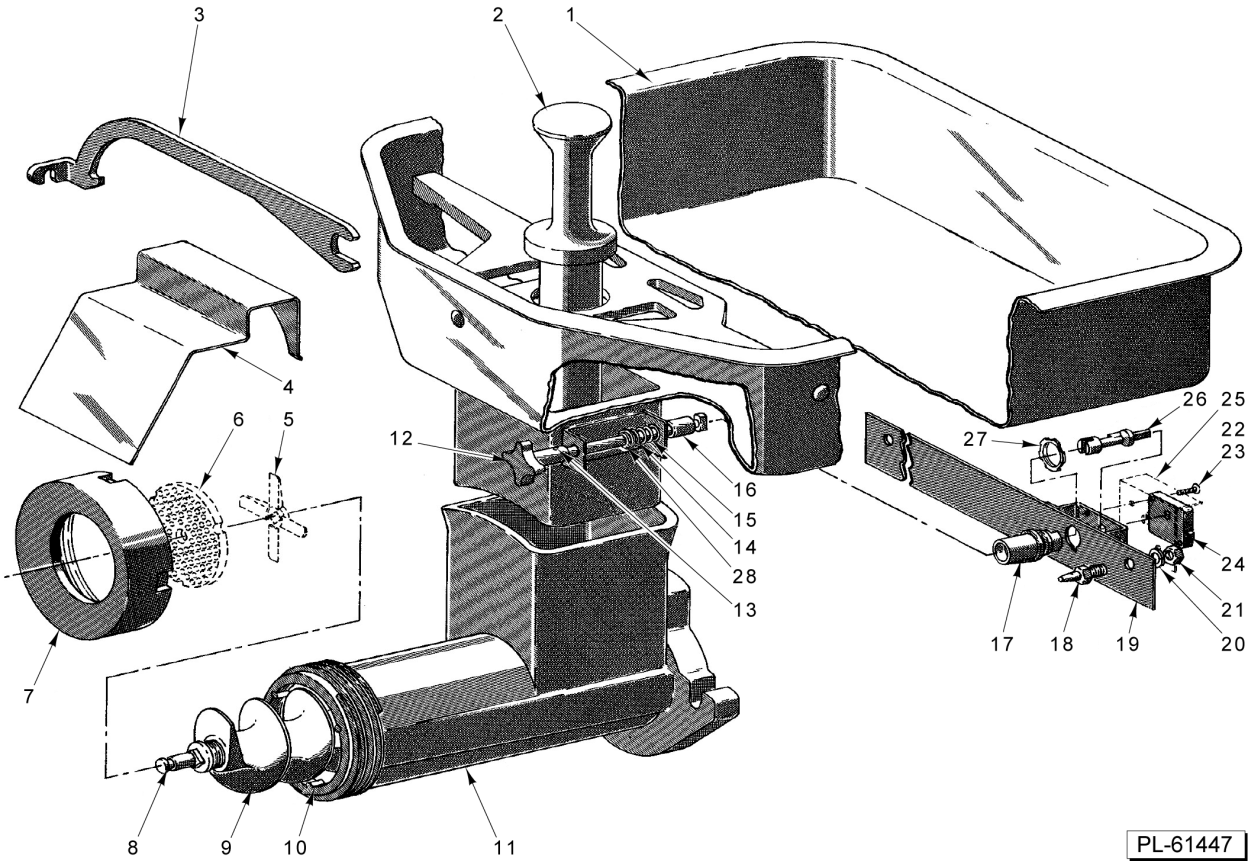

CHOPPER UNIT

CHOPPER UNIT

ILLUS. PL-61447	PART NO.	NAME OF PART	AMT.
1	A-290116	NLA - Obsolete--Feed Pan & Locking Knob Assy. (Incls. items #12 thru 16 & 28)	1
2	P-89272-24	Feed Stomper (Plastic)	1
3	R-88187	Wrench - Spanner	1
4	R-86124	Deflector - Meat	1
*5		Knife - Chopper	1
*6		Chopper Plate	1
7	R-86050	NLA - Obsolete--Ring - Adjusting	1
8	C-110576	Stud - Plate	1
9	P-111825	Worm Assy. (Incls. item #8)	1
10	A-105806	Pin - Plate	3
11	M-87309-1	Chopper Cylinder Assy. (Incls. item #10)	1
12	C-124689	Knob - Lock Shaft	1
13	PG-7-46	Groov - Pin - Type E, 1/8" Dia. x 5/8"	1
14	WS-18-30	Washer	1
15	B-124717	Spring - Compression	1
16	B-124690	Key Shaft Assy	1
17	D-123988	Housing - Interlock Actuator Shaft	1
18	C-124673	Locator - Feed Pan	2
19	C-124714	Locator Support Assy	1
20	WL-4-11	Lock Washer - 1/2" Medium	2
21	NS-13-33	Full Nut - 1/2"-13 Hex Fin	2
22	SC-81-5	Mach. Screw - #4-40 x 3/4" Rd. Hd	2
23	NS-9-2	Mach. Nut - #4-40 Hex	2
24	P-87711-154-1	Switch - Interlock	1
25	B-290059	Insulator - Interlock Switch	1
26	C-124680	Shaft - Interlock Actuator	1
27	FE-6-7	Lock Nut - 1/2"-14 (Shaft Housing)	1
28	RR-9-10	Retaining Ring	1
	M-5176	Stuffer - Sausage (Hog Casing) (Not Shown)	1
	P-5194	Stuffer - Sausage (Sheep Casing) (Not Shown)	1

* Sharp,high quality knives and plates should be purchased or rented for this chopper.