HOBART

SERVICE

CATALOG OF REPLACEMENT PARTS



4732 CHOPPERS

4732
4732A

A product of Hobart Service

701 S. Ridge Ave Troy, OH 45374

FORM F43042 Rev. D (February 2026)

 © HOBART SERVICE 2026

Table of Contents

4 MOTOR UNIT
6 HOUSING UNIT (4732)
8 HOUSING UNIT (4732A)
10 ATTACHMENT HUB AND TRANSMISSION UNIT
12 ELECTRICAL UNIT
14 CHOPPER UNIT (4732)
16 CHOPPER UNIT (4732A)

F43042

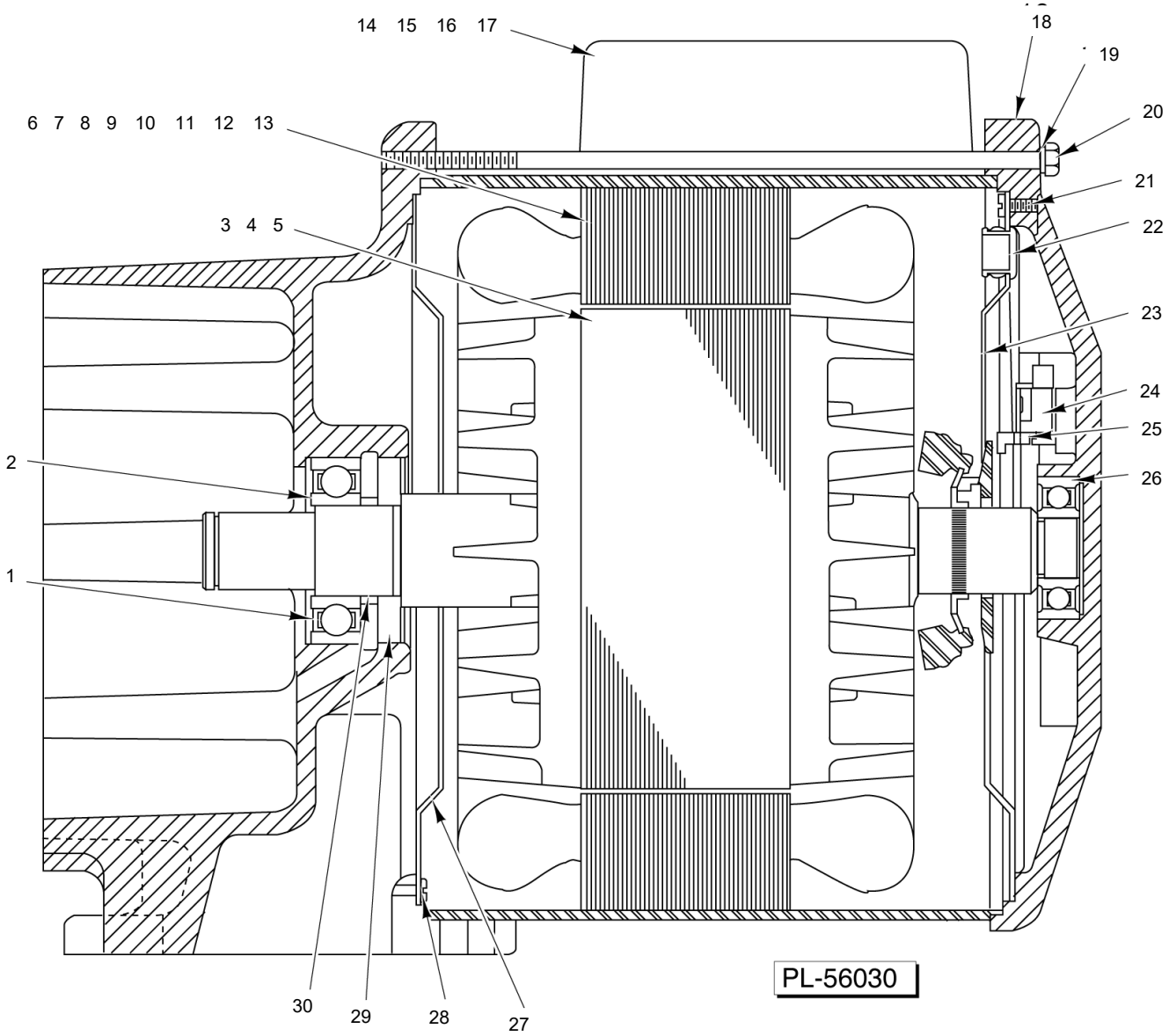

MOTOR UNIT

MOTOR UNIT

ILLUS.	PART NO.	NAME OF PART	AMT.
PL-5421			
1	SL-003-10	Loading Spring	1
2	BB-006-26	Ball Bearing	1
3	00-022275-00232	Rotor Assy. (60 Hz., 1 Ph.)	1
4	00-022275-00233	Rotor Assy. (50 Hz., 1 Ph.)	1
5	00-015747-00264	Rotor Assy. (50/60 Hz. , 3 Ph.)	1
6	00-065477-112-1	Stator Assy. (200 V., 60 Hz., 1 Ph.)	1
7	00-065477-112-2	Stator Assy. (230 V., 60 Hz., 1 Ph.)	1
8	00-065477-112-3	Stator Assy. (220 V., 50 Hz., 1 Ph.)	1
9	00-065478-141-1	Stator Assy. (200 V., 60 Hz., 3 Ph.)	1
10	00-065478-141-2	Stator Assy. (230/460 V., 60 Hz., 3 Ph.)	1
11	00-065478-140-1	Stator Assy. (220/380/415 V., 50 Hz., 3 Ph.)	1
12	FE-016-02	Bushing - Snap (1 Ph.)	3
13	FE-016-02	Bushing - Snap (3 Ph.)	1
14	00-070487-00009	Capacitor (1 Ph.)	2
15	00-089258	Retainer - Capacitor (1 Ph.)	2
16	00-104722	Capacitor Cover & Insulator Assy. (1 Ph.)	2
17	SD-015-27	Self-Tapping Screw 10-24 x 5/16 Pan Hd. Taptite (1 Ph.)	4
18	00-089188-00001	Bracket - Bearing	1
19	WL-003-38	Lockwasher 1/4 Helical	4
20	00-080977-00003	Cap Screw 1/4-28 x 83/8 Hex Hd.	4
21	SC-018-13	Mach. Screw 8-32 x 1/4 Pan Hd. (1 Ph.)	4
22	00-080369	Bushing - Snap (1 Ph.)	1
23	00-089203-00001	Shroud - Fan (1 Ph.)	1
24	00-114514	Starting Switch (Stationary Part) (1 Ph.)	1
25	SC-009-67	Mach. Screw 6-32 x 5/8 Rd. Hd. (1 Ph.)	2
26	BB-005-46	Ball Bearing	1
27	00-089203-00001	Shroud - Fan	1
28	SC-018-13	Mach. Screw 8-32 x 1/4 Pan Hd	4
29	00-085960	Deflector - Grease	1
30	00-085959	Spacer - Motor Bearing	1

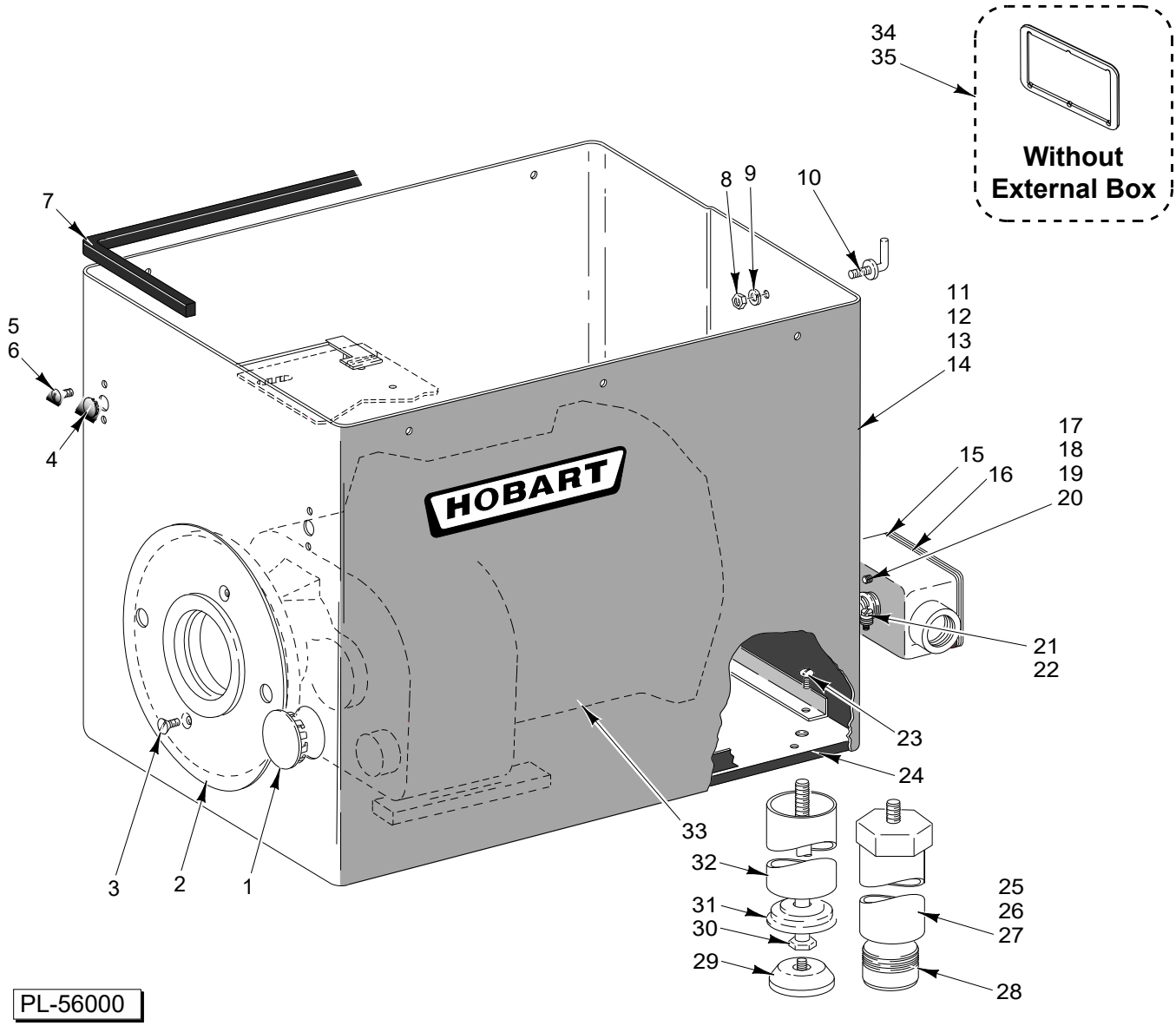

HOUSING UNIT (4732)

HOUSING UNIT (4732)

ILLUS.	PART NO.	NAME OF PART	AMT.
PL-5406			
1	00-291592	Plug - Button (2 In.)	1
2	00-086348	Plate - Trim	1
3	SC-022-19	Mach. Screw 10-24 x 1/2 Slotted Flat Hd. (SST)	2
4	PB-002-08	Plug - Button (25/64 In.)	1
5	SC-010-36	Mach. Screw 10-24 x 5/8 Slotted Truss Hd.	2
6	NS-009-22	Nut 10-24 Hex	2
7	00-102825-00001	Gasket - Housing	1
8	NS-013-02	Nut 1/4-20 Hex	1
9	WL-003-38	Lockwasher 1/4 Helical	1
10	00-086165	Screw - Spanner Wrench Support	1
11	00-290481-00004	Housing Assy. (Painted) (60 Hz.)	1
12	00-290481-00005	Housing Assy. (Painted) (50 Hz.)	1
13	00-290481-00006	Housing Assy. (SST) (60 Hz.)	1
14	00-290481-00007	Housing Assy. (SST) (50 Hz.)	1
15	00-069853	Box - Junction	1
16	FE-004-21	Cover - Junction Box (Incls. Gasket)	1
17	NS-009-30	Nut 10-32 Hex	1
18	WL-007-12	Lockwasher #10 External Shakeproof	2
19	SC-060-87	Mach. Screw 10-32 x 3/4 Slotted Rd. Hd.	1
20	00-118544-00001	Lug - Solderless	1
21	FE-002-33	Connector - Straight 3/4 Male x 3/4 Flex Conduit	1
22	FE-007-12	Lock Nut 3/4 Conduit	1
23	SC-008-10	Mach. Screw 10-24 x 1/2 Rd. Hd.	8
24	00-116549	Plate - Base	1
25	00-290395-00001	Adjustable Leg Assy. (15 In.) (Incls. Item 28)	4
26	00-290395-00002	Adjustable Leg Assy. (18 In.) (Incls. Item 28)	4
27	00-290395-00003	Adjustable Leg Assy. (21 In.) (Incls. Item 28)	4
28	00-119237	Foot - Adjustable Leg	4
29	00-083681	Foot - Rubber	4
30	00-290061-00001	Stud (53/8 In. Lg.)	4
31	00-064814	Cap - End (53/8 In. Lg.)	4
32	00-290060-00001	Leg - Standard (53/8 In.) (SST)	4
33	ML-034173	Motor (Give Electric Spec.)	1
34	00-946632-00002	Cover & Gasket Assy.	1
35	00-875813	Seal - Front Cover	1

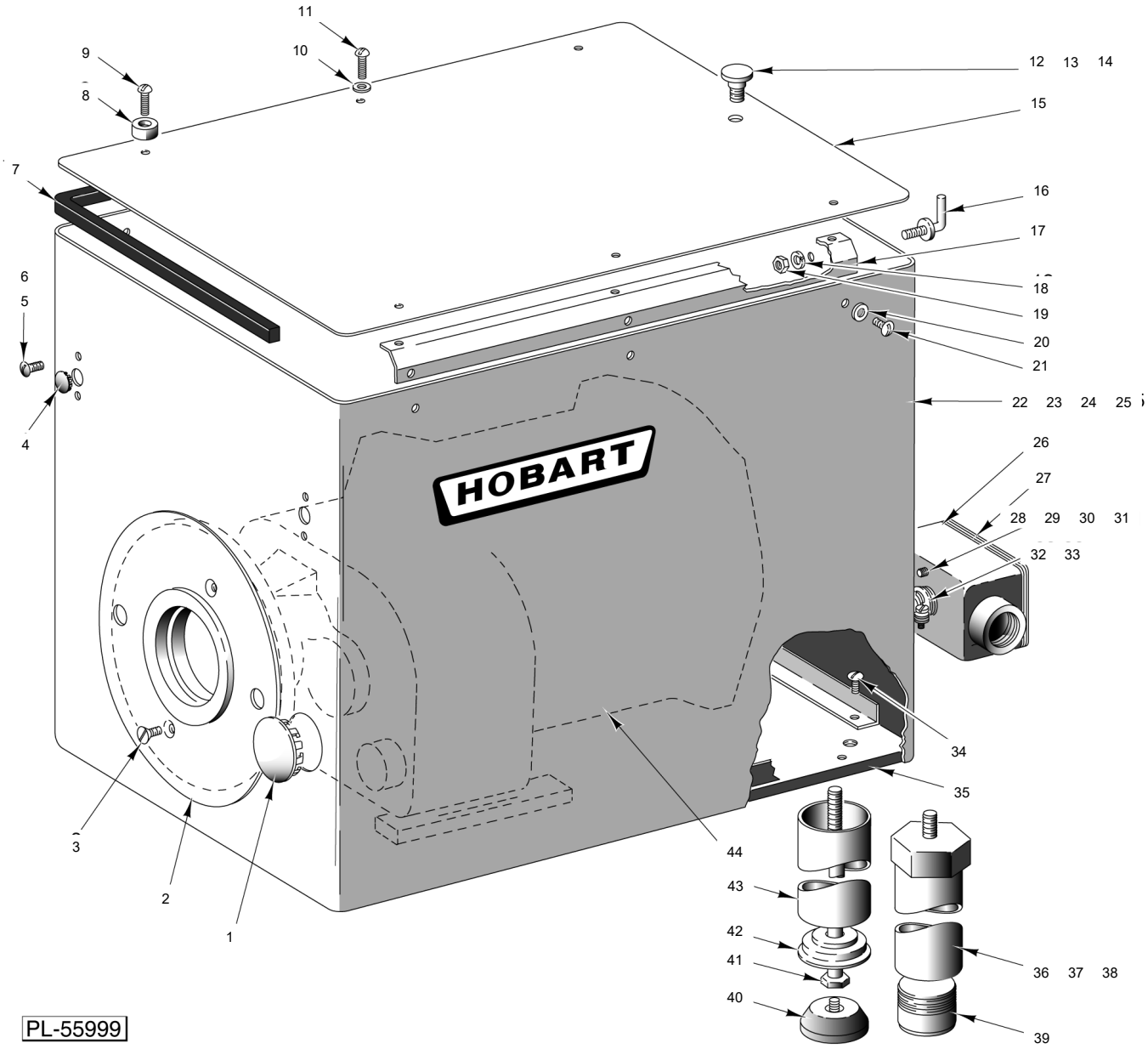

HOUSING UNIT (4732A)

HOUSING UNIT (4732A)

ILLUS.	PART NO.	NAME OF PART	AMT.
PL-5405			
1	00-291592	Plug - Button (2 In.)	1
2	00-086348	Plate - Trim	1
3	SC-022-19	Mach. Screw 10-24 x 1/2 Slotted Flat Hd. (SST)	2
4	PB-002-08	Plug - Button (25/64 In.)	1
5	SC-010-36	Mach. Screw 10-24 x 5/8 Slotted Truss Hd.	2
6	NS-009-22	Nut 10-24 Hex	2
7	00-102825-00001	Gasket - Housing	1
8	00-019105-00002	Bumper - Pan Rest	4
9	SC-021-25	Mach. Screw 10-24 x 3/4 Slotted Rd. Hd. (SST)	4
10	WS-019-10	Washer (SST)	2
11	SC-010-36	Mach. Screw 10-24 x 5/8 Slotted Truss Hd.	2
12	00-124700	Post - Pan Anchor	1
13	WL-004-06	Lockwasher 3/8 Helical	1
14	NS-013-25	Nut 3/8-16 Hex	1
15	00-124702	Cover - Housing	1
16	00-086165	Screw - Spanner Wrench Support	1
17	00-124704	Cover Support Assy.	2
18	WL-003-38	Lockwasher 1/4 Helical	1
19	NS-013-02	Nut 1/4-20 Hex	1
20	WS-019-10	Washer 0.193 x 0.500 x 0.031	6
21	SC-010-36	Mach. Screw 10-24 x 5/8 Slotted Truss Hd.	6
22	00-290481-00009	Housing Assy. (Painted) (60 Hz.)	1
23	00-290481-00011	Housing Assy. (Painted) (50 Hz.)	1
24	00-290481-00008	Housing Assy. (SST) (60 Hz.)	1
25	00-290481-00010	Housing Assy. (SST) (50 Hz.)	1
26	00-069853	Box - Junction	1
27	FE-004-21	Cover - Junction Box (Incls. Gasket)	1
28	NS-009-30	Nut 10-32 Hex	1
29	WL-007-12	Lockwasher #10 External Shakeproof	2
30	SC-060-87	Mach. Screw 10-32 x 3/4 Slotted Rd. Hd.	1
31	00-118544-00001	Lug - Solderless	1
32	FE-002-33	Connector - Straight 3/4 Male x 3/4 Flex Conduit	1
33	FE-007-12	Lock Nut 3/4 Conduit	1
34	SC-008-10	Mach. Screw 10-24 x 1/2 Rd. Hd.	8
35	00-116549	Plate - Base	1
36	00-290395-00001	Adjustable Leg Assy. (15 In.) (Incls. Item 39)	4
37	00-290395-00002	Adjustable Leg Assy. (18 In.) (Incls. Item 39)	4
38	00-290395-00003	Adjustable Leg Assy. (21 In.) (Incls. Item 39)	4
39	00-119237	Foot - Adjustable Leg	4
40	00-083681	Foot - Rubber	4
41	00-290061-00001	Stud (53/8 In. Leg)	4
42	00-064814	Cap - End (53/8 In. Leg)	4
43	00-290060-00001	Leg - Standard (53/8 In.) (SST)	4
44	ML-34173	Motor (Give Electric Spec.)	1
	00-123771	Kit - Cord	1

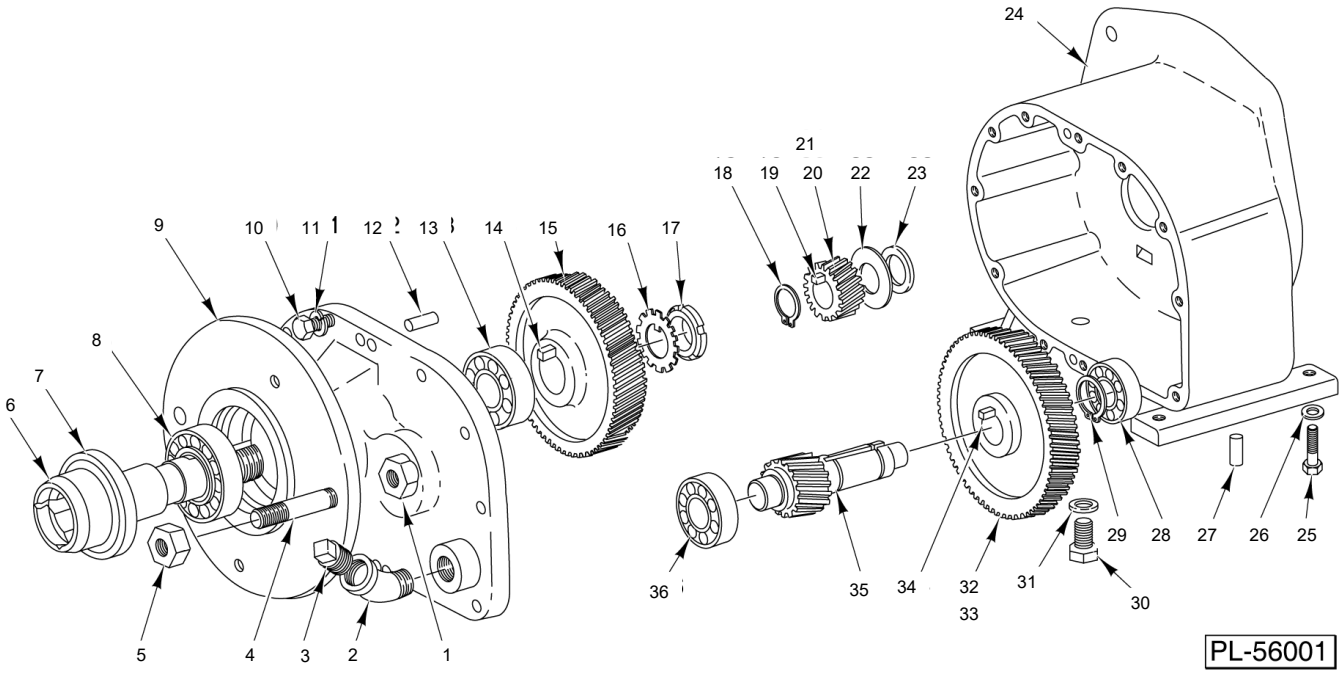

ATTACHMENT HUB AND TRANSMISSION UNIT

ATTACHMENT HUB AND TRANSMISSION UNIT

ILLUS.	PART NO.	NAME OF PART	AMT.
PL-5407			
1	NS-013-43	Nut 5/8-11 Hex	2
2	FP-014-13	Elbow 3/4 x 45 Deg.	1
3	00-088115-00001	Plug 3/4 Pipe	1
4	00-072981-00003	Stud - Cylinder	2
5	NS-048-57	Nut 5/8-11 Hex	2
6	00-085891	Shaft - Square Drive	1
7	00-085961	Seal - Square Drive Shaft	1
8	BR-002-26	Bearing - Roller	1
9	00-085888	Hub - Attachment	1
10	SC-062-24	Cap Screw 5/16-18 x 1-1/2 Hex Hd.	12
11	WL-003-45	Lockwasher 5/16 Helical	12
12	00-011800-00239	Dowel	2
13	BR-002-27	Roller Bearing - Cup & Cone Assy	1
14	00-109070-00021	Key	1
15	00-089265	Gear - Chopper Drive (60T)	1
16	WL-012-07	Lockwasher	1
17	NS-034-07	Lock Nut	1
18	RR-011-06	Retaining Ring	1
19	00-109070-00002	Key	1
20	00-085896-00001	Gear - Motor Pinion (21T) (60 Hz.)	1
21	00-085896-00002	Gear - Motor Pinion (24T) (50 Hz.)	1
22	00-085957	Flinger - Oil	1
23	00-089804	Spacer - Oil Flinger	1
24	00-116588	Case - Transmission	1
25	SC-118-10	Cap Screw 3/8-16 x 1	4
26	WL-004-04	Lockwasher 3/8	4
27	00-011800-00239	Dowel	2
28	BB-007-14	Bearing - Ball	1
29	RR-007-02	Retaining Ring	1
30	SC-036-93	Cap Screw 7/16-20 x 3/4 Hex Hd	1
31	WS-021-20	Washer (Nylon)	1
32	00-085892-00001	Gear - Main Drive (68T) (60 Hz.)	1
33	00-085892-00002	Gear - Main Drive (65T) (50 Hz.)	1
34	00-012430-00142	Key 1/4 x 1/4 x 1	1
35	00-089266	Counter Shaft - Pinion (17T)	1
36	BB-018-33	Bearing - Ball	1

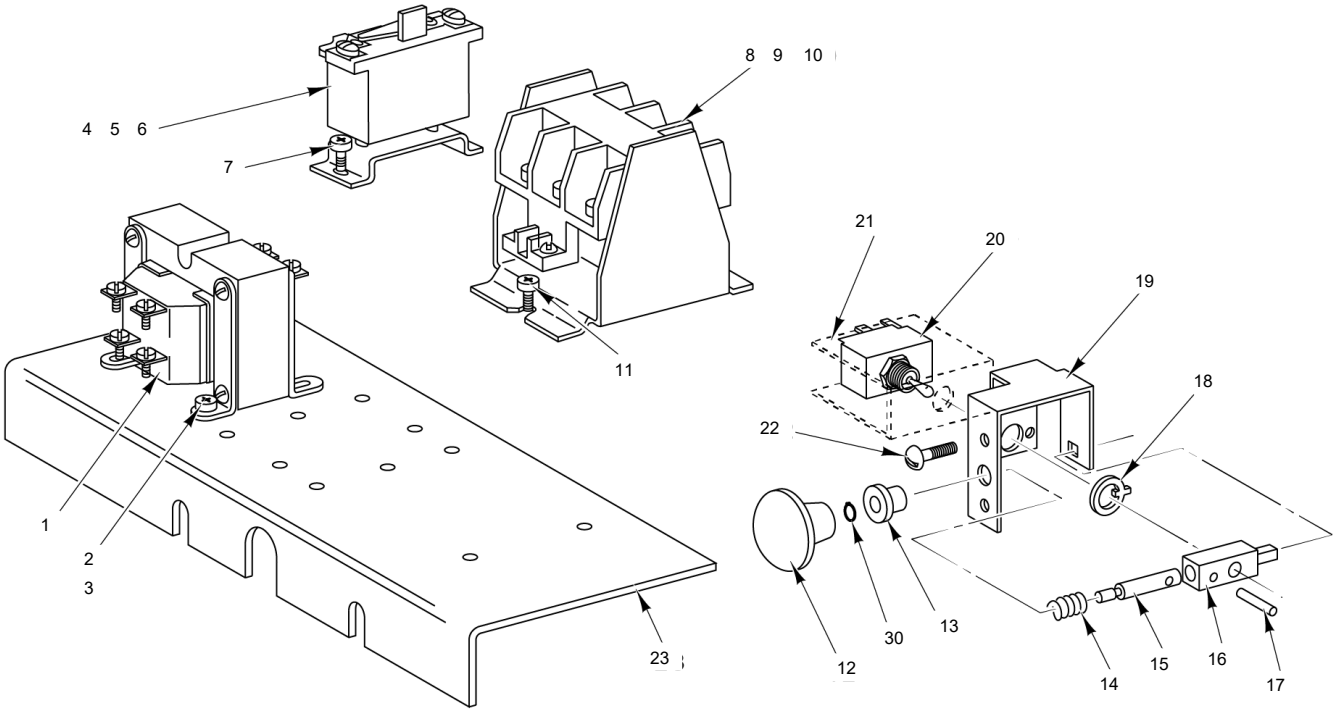

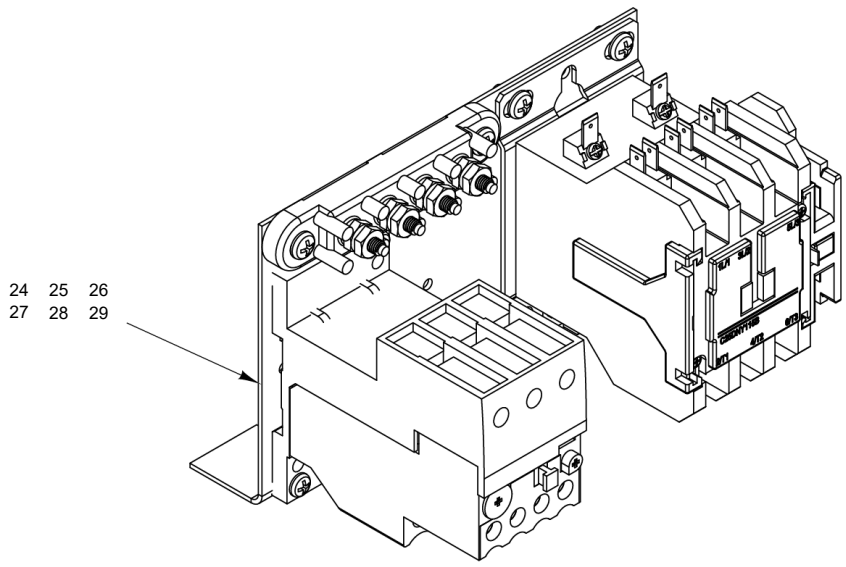

PL-56031

ELECTRICAL UNIT

ELECTRICAL UNIT

ILLUS.	PART NO.	NAME OF PART	AMT.
PL-5422			
1	00-101935	Transformer (200/220/230/380/415/460 V. to 115 V.)	1
2	SD-015-42	Self-Tapping Screw 8-32 x 5/8 Phil. Pan Hd., Type TT	4
3	WL-007-07	Lockwasher #8	4
*4	00-088196-006-1	Relay - Thermal Overload (1 Ph.) (Use with Overload Protection)	1
*5	00-088196-009-1	Relay - Thermal Overload (3 Ph.) (Use with Overload Protection)	1
*6		Heater Element - Overload Relay (Give Electric Spec., Mach. Model, & Motor Type) (Use with Overload Protection)	0
7	SD-015-42	Self-Tapping Screw 8-32 x 5/8 Phil. Pan Hd., Type TT	2
8	00-087713-037-1	Contactor Assy. (200/230 V., 60 Hz., 220 V., 50 Hz.) (2 Pole)	1
9	00-087713-101-1	Contactor Assy. (200/230 V., 60 Hz., 220 V., 50 Hz.) (3 Pole)	1
10	00-087713-101-2	Contactor Assy. (115 V., 50/60 Hz., 3 Pole) (Pilot Circuit)	1
11	SD-040-05	Self-Tapping Screw 10-32 x 3/8 Phil. Pan Hd.	2
12	00-086163-00001	Knob - Switch Shaft	1
13	00-080538-00001	Bushing	1
14	00-121547	Spring - Compression	1
15	00-124781	Shaft - Switch	1
16	00-124780	Actuator - Switch	1
17	RP-003-06	Rollpin - 1/8 Dia. x 3/4 Lg.	1
18	00-121827	Ring - Locking	1
19	00-123241-00001	Bracket - Switch	1
20	00-875567	Switch Assy.	1
21	00-290058	Insulator - Switch	1
22	SC-010-36	Mach. Screw 10-24 x 5/8 Slotted Truss Hd.	2
23	00-271575	Panel - Control	1
24	00-938789	Kit - Overload Assy. (230V) (Incls. Items 25 thru 29)	0
25	00-937596-003-2	Overload	1
26	00-937569-00004	Adapter - Overload	1
27	SD-015-42	Self-Tapping Screw 8-32 x 5/8 Phil. Pan Hd., Type TT	2
28	NS-010-20	Nut 10-32 Hex (Brass)	3
29	SC-109-24	Mach. Screw 10-32 x 3/8 Phil. Truss Hd. (BRASS)	3
30	00-875049	Retaining Ring	1

* No Longer Available, Order Item 24

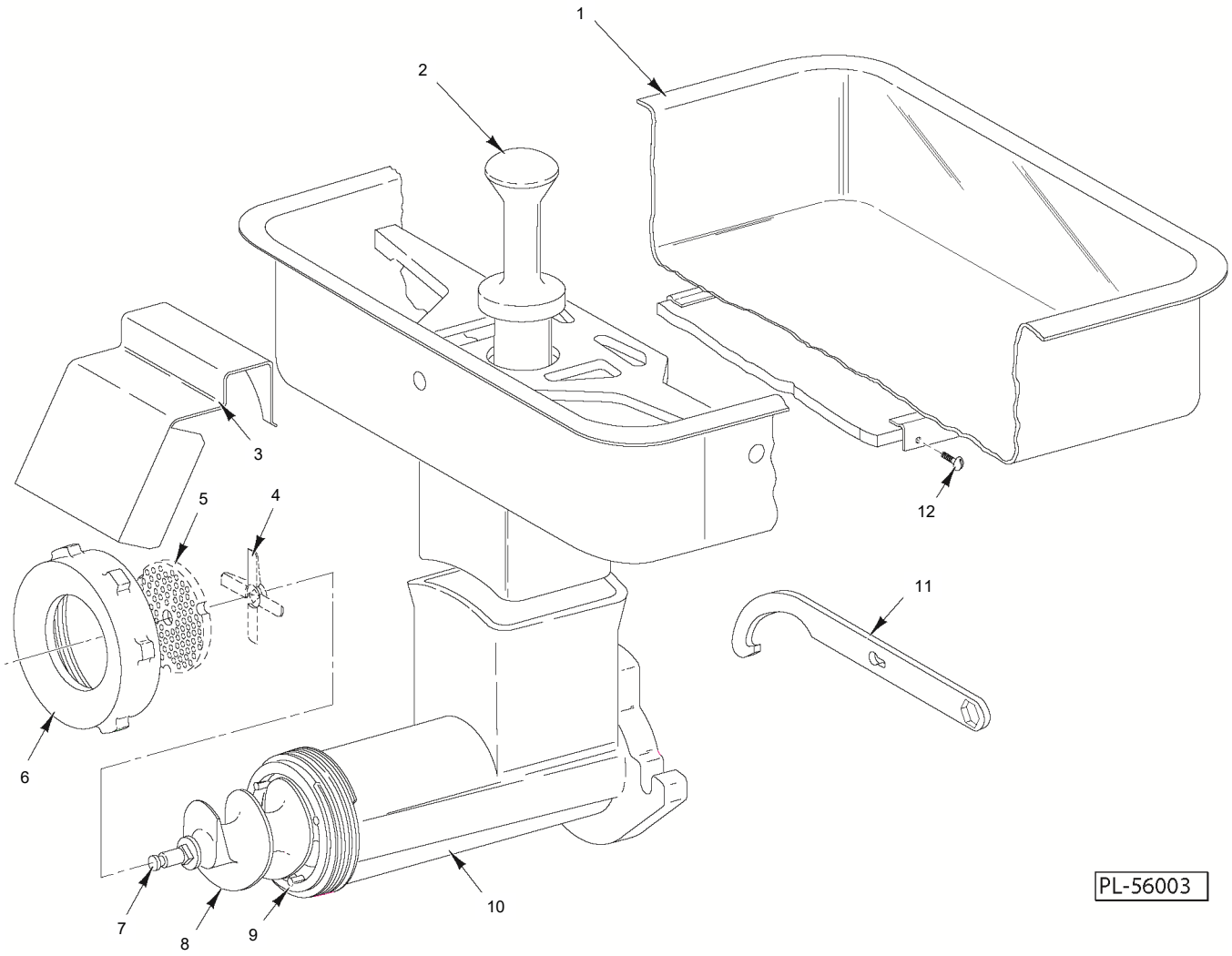

CHOPPER UNIT (4732)

CHOPPER UNIT (4732)

ILLUS.	PART NO.	NAME OF PART	AMT.
PL-5409			
1	00-437416	Feed Pan, Guard, & Insulator Assy. (SST)	1
2	00-089272-00023	Feed Stomper (Plastic)	1
3	00-875250	Deflector - Meat	1
4		Knife - Chopper	1
5		Chopper Plate	1
6	00-873697	Ring - Adjusting	1
7	00-110576	Stud - Plate	1
8	00-111825	Worm Assy. (Incls. Item 7)	1
9	00-105806	Pin - Plate	3
10	00-087309-00001	Chopper Cylinder Assy. (Incls. Item 9)	1
11	00-873570	Wrench - Cylinder	1
12	SC-010-36	Mach. Screw 10-24 x 5/8 Slotted Truss Hd.	6
	00-005176	Stuffer - Sausage (Hog Casing) (Not Shown)	1
	00-005194	Stuffer - Sausage (Sheep Casing) (Not Shown)	1

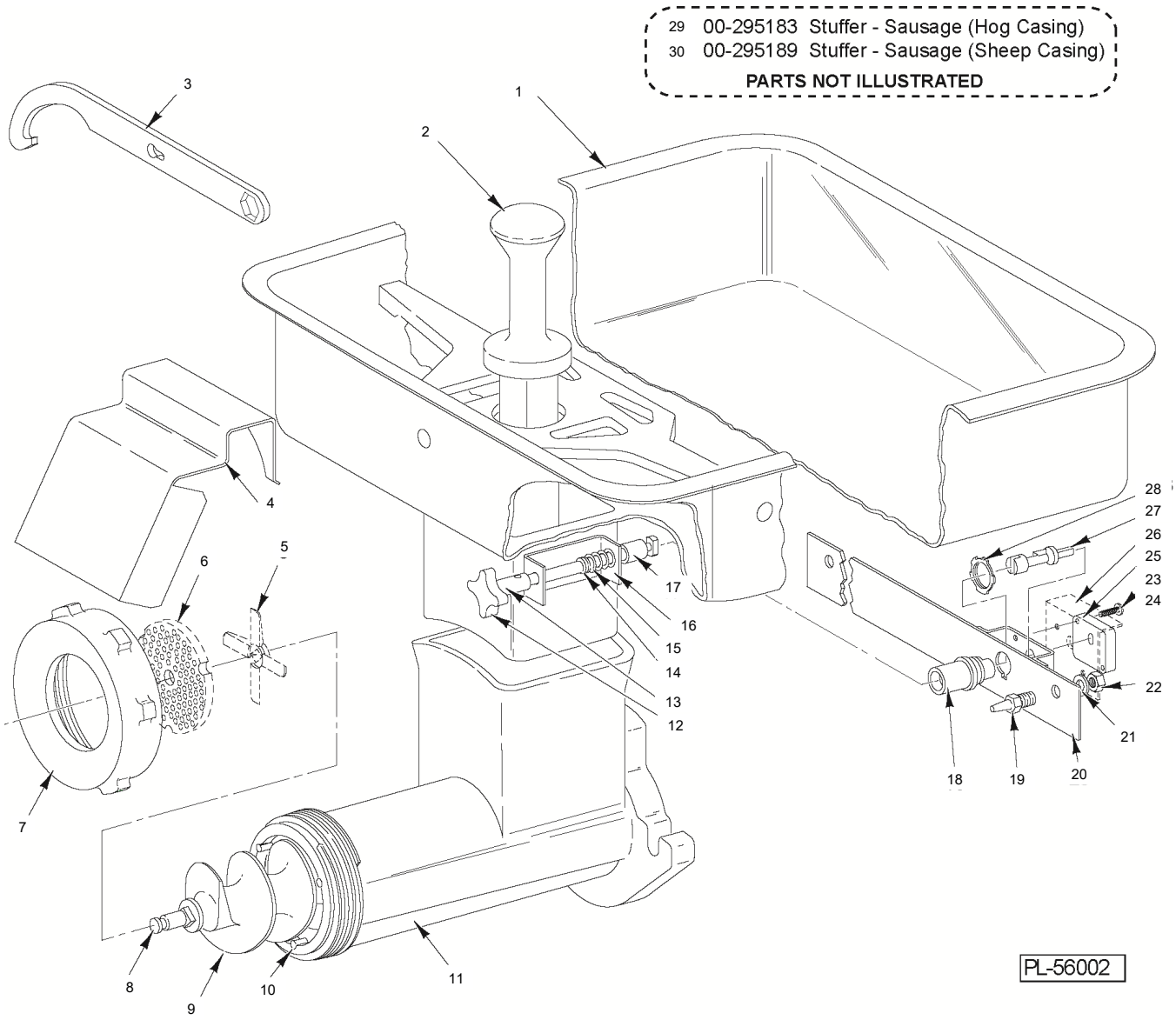

CHOPPER UNIT (4732A)

CHOPPER UNIT (4732A)

ILLUS.	PART NO.	NAME OF PART	AMT.
PL-5408			
1	00-290116	Pan Assy. (Incls. Items 12 thru 17)	1
2	00-089272-00024	Feed Stomper (Plastic)	1
3	00-873570	Wrench - Cylinder	1
4	00-875250	Deflector - Meat	1
*5		Knife - Chopper	1
*6		Chopper Plate	1
7	00-873697	Ring - Adjusting	1
8	00-110576	Stud - Plate	1
9	00-111825	Worm Assy. (Incls. Item 8)	1
10	00-105806	Pin - Plate	3
11	00-087309-00001	Chopper Cylinder Assy. (Incls. Item 10)	1
12	00-124689	Knob - Lock Shaft	1
13	PG-007-41	Grooved Pin 1/8 x 5/8, Type E	1
14	RR-009-10	Retaining Ring 3/8 In. (SST)	1
15	WS-018-30	Washer (SST)	1
16	00-124717	Spring - Compression	1
17	00-124690	Key Shaft Assy.	1
18	00-123988	Housing - Interlock Actuator Shaft	1
19	00-124673	Locator - Feed Pan	2
20	00-124714	Locator Support Assy.	1
21	WL-004-11	Lockwasher 1/2 Helical	2
22	NS-013-33	Nut 1/2-13 Hex Fin	2
23	SC-081-05	Mach. Screw 4-40 x 3/4 Slotted Rd. Hd.	2
24	NS-008-02	Mach. Nut 4-40 Hex	2
25	00-087711-154-1	Switch - Interlock	1
26	00-290059	Insulator - Interlock Switch	1
27	00-124680	Shaft - Interlock Actuator	1
28	FE-006-07	Lock Nut - 1/2-14 (Shaft Housing)	1
29	00-295183	Stuffer - Sausage (Hog Casing)	1
30	00-295189	Stuffer - Sausage (Sheep Casing)	1

* Sharp, high quality knives and plates should be purchased or rented for this chopper.