CATALOG OF REPLACEMENT PARTS



CHOPPER

ML-136151 **4812**
ML-136152

A product of HOBART 701 S. RIDGE AVENUE TROY, OHIO 45374-0001

FORM 43154 Rev. B (April 2018)

 © HOBART 2018

Table of Contents

5 ELECTRICAL COMPONENTS
7 HOUSING UNIT
9 ATTACHMENT HUB AND MOTOR
11 #12 CHOPPER ATTACHMENT (NSF)

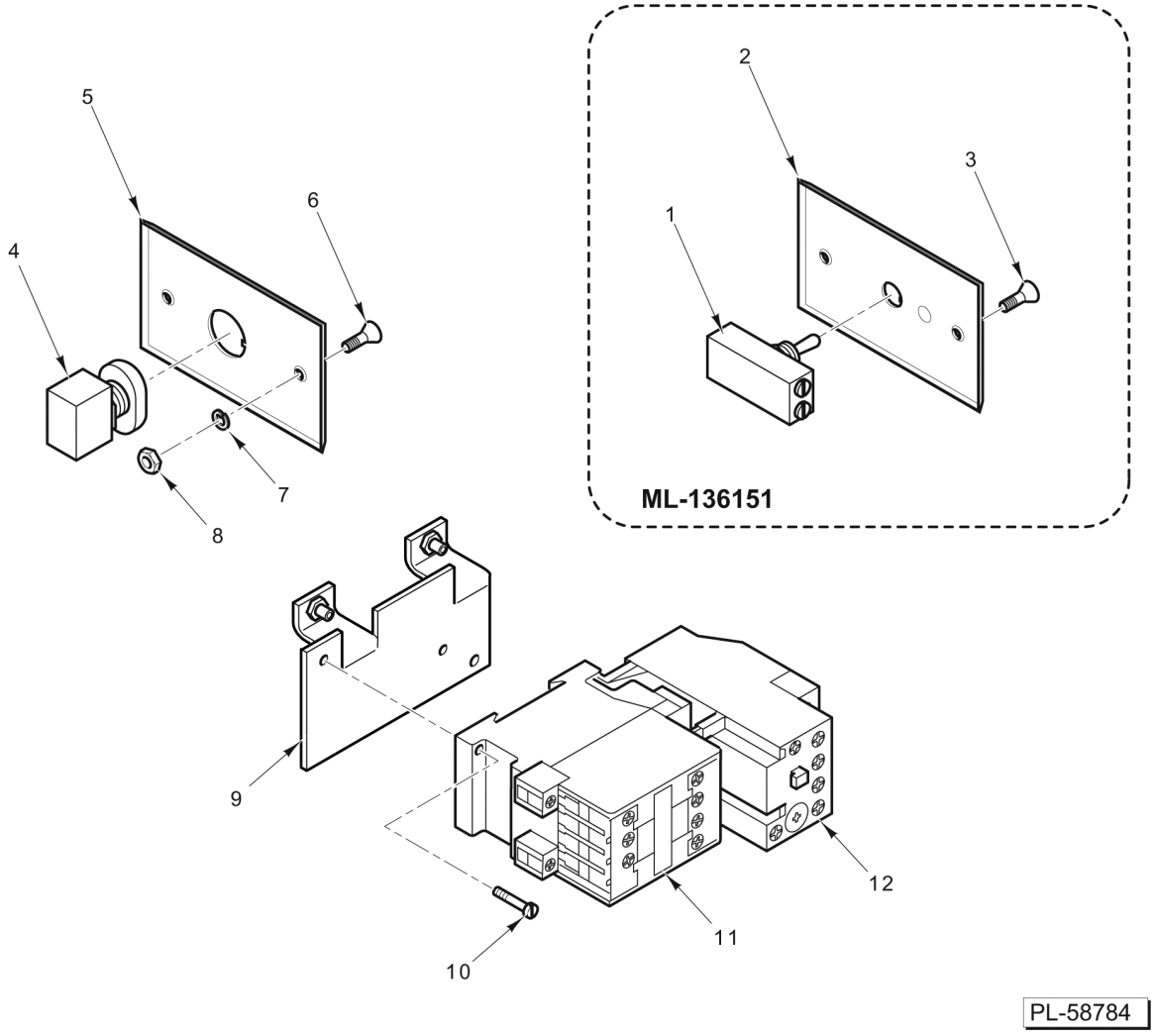

ELECTRICAL COMPONENTS

ELECTRICAL COMPONENTS

ILLUS. PL-58784	PART NO.	NAME OF PART	AMT.
1	00-944059	Switch Assy. (With Two Harnesses)	1
2	00-291961	Plate - Switch	1
3	SC-030-06	Mach. Screw 6-32 x 3/8 Oval Hd. (ML-136151)	2
4	00-087711-00350	Switch (Start/Stop) (ML-136152)	1
5	00-119953	Plate - Switch (ML-136152)	1
6	SC-030-06	Mach. Screw 6-32 x 3/8 Slotted Oval Hd. (ML-136152)	2
7	WL-019-32	Lockwasher #6 External (ML-136152)	2
8	NS-009-07	Nut 6-32 Hex (ML-136152)	2
9	00-914102	NLA - Obsolete--Plate - Electrical Weldment (ML-136152)	1
10	SC-025-17	Mach. Screw 6-32 x 5/8 Slotted Bndg. Hd. (SST)	2
11	00-087713-00109	Contactor (ML-136152)	1
12	00-914287	Overload (ML-136152)	1
	00-914280-00002	NLA - Obsolete--Plate - Electrical Assy. (Incls Items 9 thru 12) (ML-136152)	1

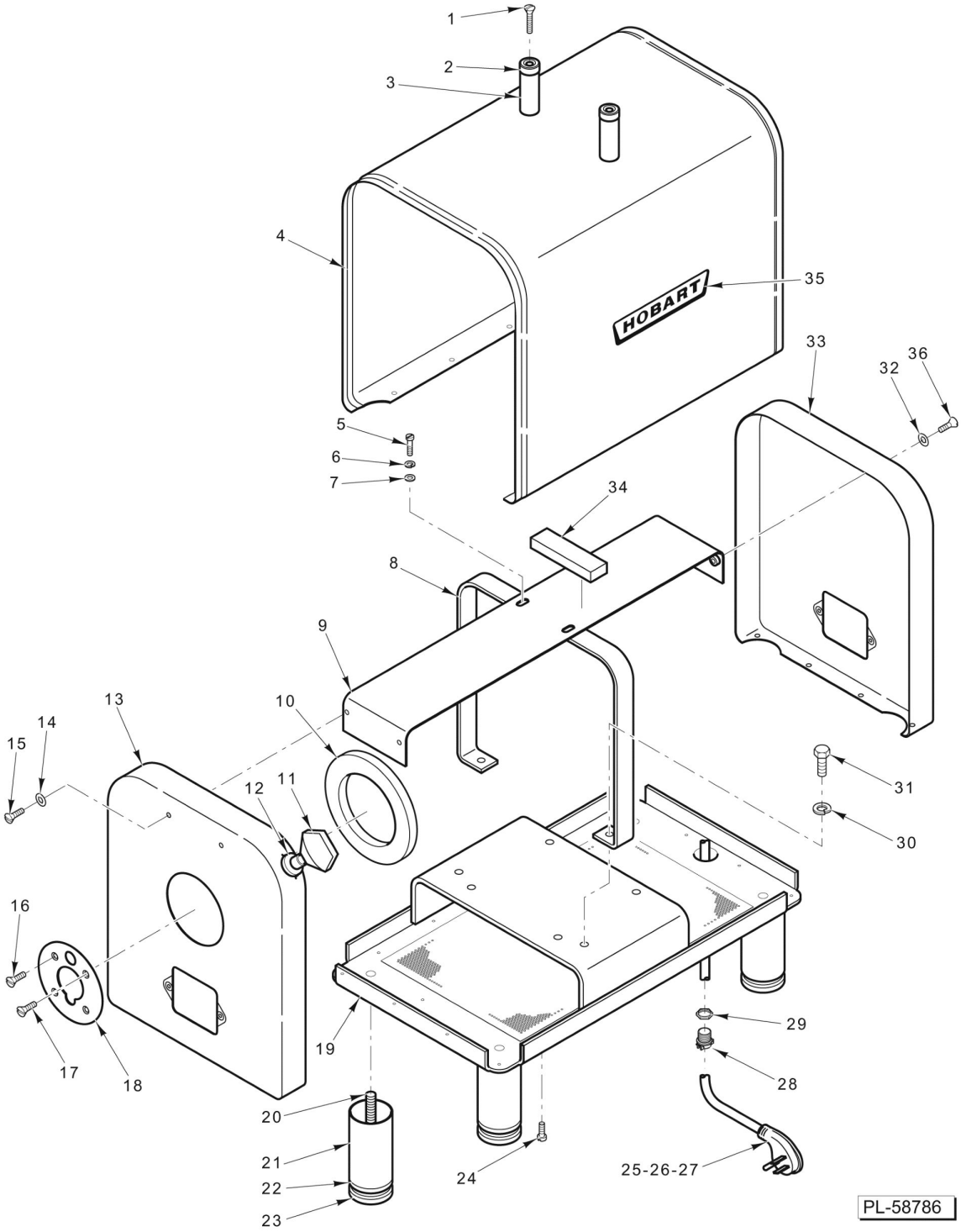

HOUSING UNIT

HOUSING UNIT

ILLUS. PL-58786	PART NO.	NAME OF PART	AMT.
1	SC-060-10	Mach. Screw 8-32 x 3 Slotted Rd. Hd	2
2	00-019105-00001	Bumper	2
3	00-119911	Spacer - Pan Rest	2
4	00-290481-00020	Housing Assy. (60 Hz.)	1
5	SC-010-16	Mach. Screw 10-24 x 1/2 Slotted Truss Hd	2
6	WL-007-12	Lockwasher 10 External Shakeproof	2
7	WS-023-07	Washer	2
8	00-875720	Support - Frame & Housing	1
9	00-875722-00001	Bracket - Locating	1
10	00-065140	Gasket - Attachment Hub	1
11	00-108197-00004	Thumb Screw Assy	1
12	00-064824	Grommet (Thumb Screw)	1
13	00-064965-00008	Panel - Front Housing	1
14	WC-004-10	Washer - Countersunk	2
15	SC-015-36	Mach. Screw 10-24 x 5/8 Slotted Oval Hd	2
16	SC-022-17	Mach. Screw 10-24 x 3/8 Slotted Flat Hd. (SST)	3
17	SC-022-16	Mach. Screw 10-24 x 5/16 Slotted Flat Hd. (SST)	1
18	00-914767	Washer - Trim (Attachment Hub)	1
19	00-875551	Frame Weldment	1
20	00-290061-00002	Stud - Leg	4
21	00-290060-00002	Leg	4
22	00-064814	Cap - Leg End	4
23	00-083681	Foot - Rubber	4
24	SC-025-07	Mach. Screw 10-24 x 5/16 Slotted Bndg. Hd. (SST)	18
25	00-117542-00098	Cord & Plug Assy. (120 V., 60 Hz., 1 Ph.)	1
26	00-117542-00097	Cord & Plug Assy. (240 V., 60 Hz., 1 Ph.) (ML-136151)	1
27	00-117542-00099	Cord & Plug Assy. (ML-136152)	1
28	FE-008-20	Strain Relief (1 Ph.)	1
29	FE-007-12	Lock Nut 3/4 Electrical	1
30	WL-003-47	Lockwasher 5/16 Helical	2
31	SC-036-40	Cap Screw 5/16-18 x 11/4 Hex Hd	2
32	WC-004-10	Washer - Countersunk	2
33	00-064805-00008	Panel - Rear Housing	1
34	00-064810	Strip - Compression	2
35	00-118365	Logo - Hobart	1
36	SC-015-36	Mach. Screw 10-24 x 5/8 Slotted Oval Hd	2

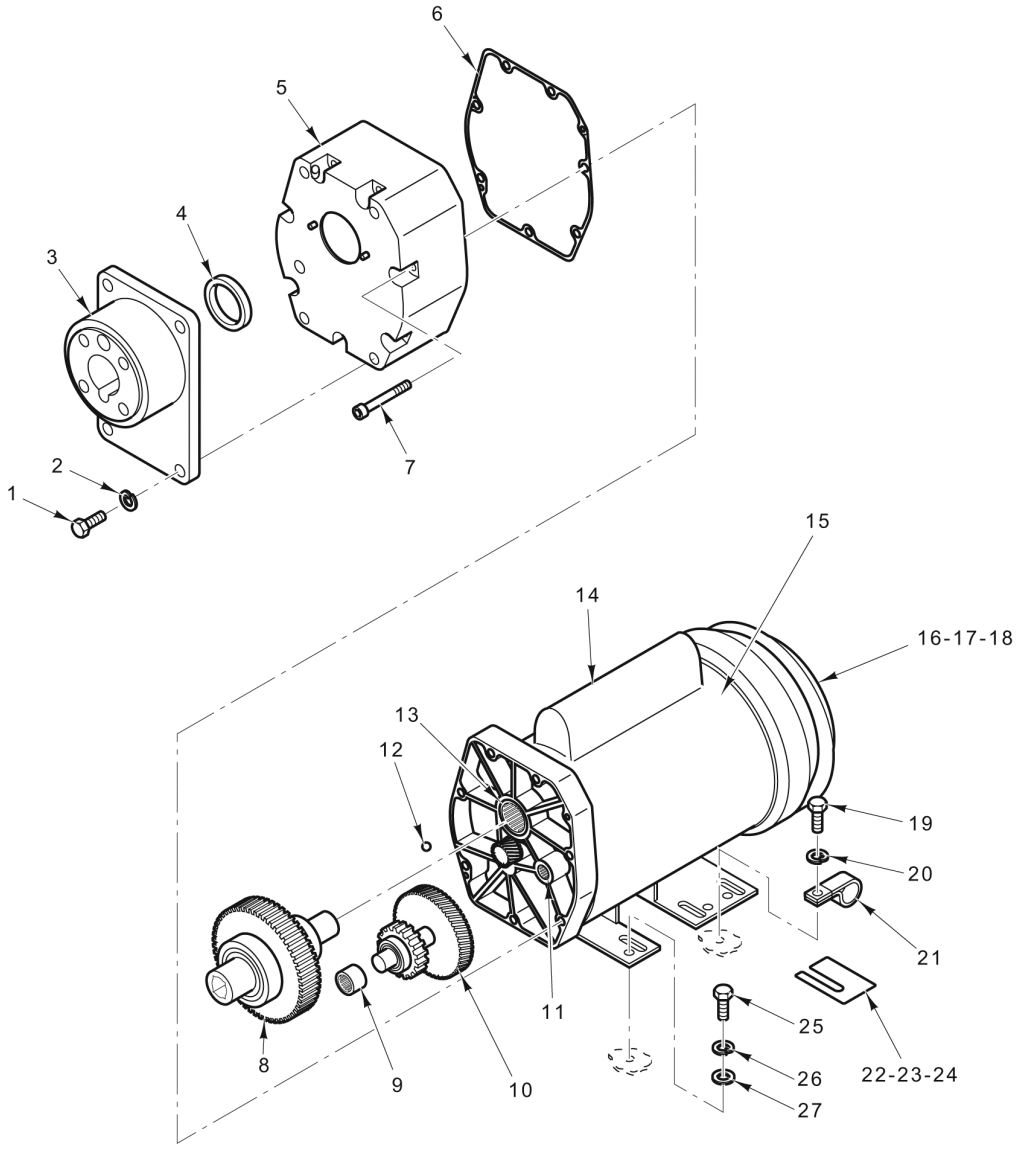

PL-58787

ATTACHMENT HUB AND MOTOR

ATTACHMENT HUB AND MOTOR

ILLUS. PL-58787	PART NO.	NAME OF PART	AMT.
1	SC-037-86	Cap Screw 7/16-14 x 1 Hex Hd	4
2	WL-004-10	Lockwasher 7/16 Helical	4
3	00-944045	Adapter - Motor Hub	1
4	00-914156	Seal	2
5	00-914125	Housing Assy	1
6	00-914131	Gasket	1
7	SC-129-15	Cap Screw 1/4-20 x 2-3/4 Hex Socket Hd	7
8	00-944046	Gear Assy. (Low Speed) (With Ball Bearing & Thrust Washer)	1
9	00-914252	Bearing - Needle	1
10	00-944047	Gear Assy. (High Speed)	1
11	00-914253	Bearing - Needle	1
12	00-914202	Ball - Steel	3
13	00-914254	Bearing - Needle	1
14	00-944048	Capacitor - Start	1
15	00-944009	Motor (1Ph.)	1
16	00-914251	Washer - Wavy	1
17	00-944049	Fan Kit	1
18	00-944050	Switch - Start	1
19	SC-027-28	Mach. Screw 8-32 x 1/4 Rd. Hd	1
20	WL-011-01	Lockwasher	2
21	00-078752-00004	Clamp - Wire	1
22	00-914128-00001	Shim - Motor (0.005 Thk.)	AR
23	00-914128-00002	Shim - Motor (0.010 Thk.)	AR
24	00-914128-00003	Shim - Motor (0.020 Thk.)	AR
25	SC-036-40	Cap Screw 5/16-18 x 11/4 Hex Hd	4
26	WL-003-47	Lockwasher 5/16 Helical	4
27	WS-029-86	Washer	4

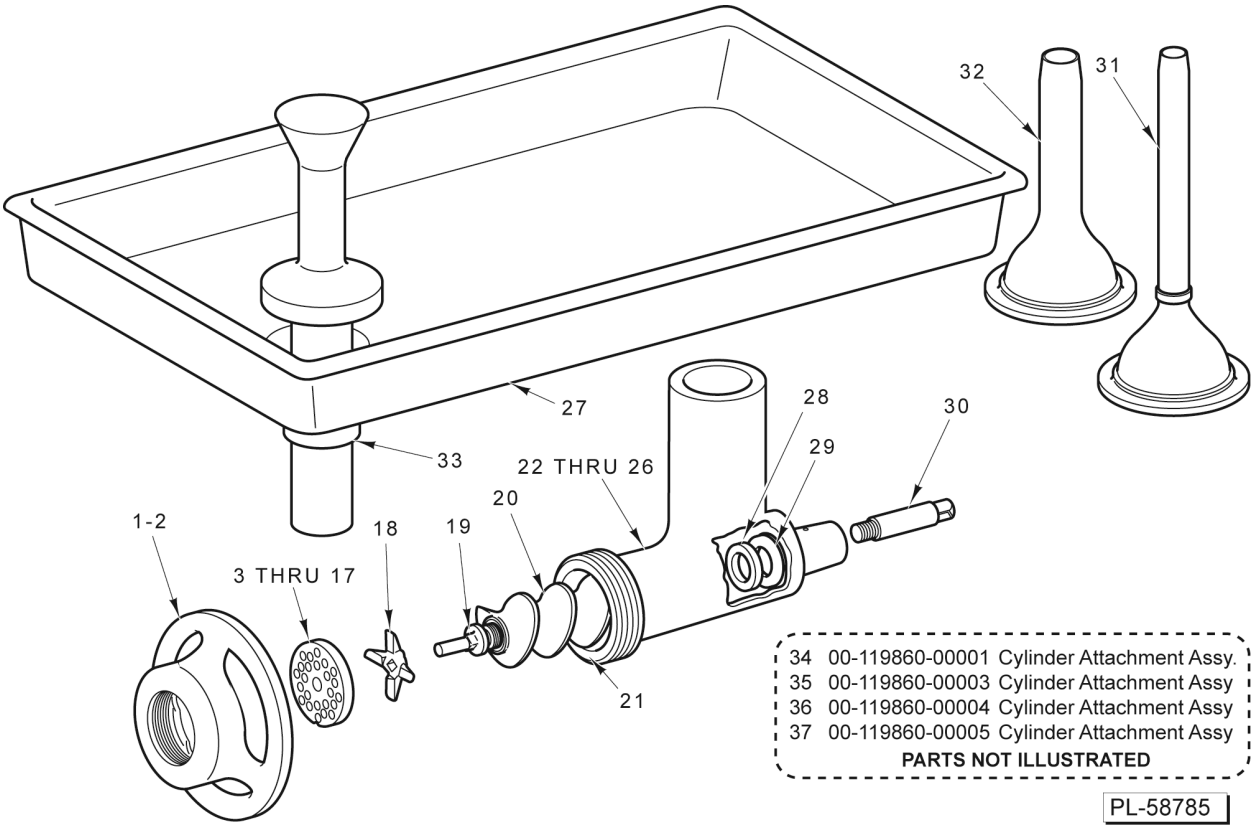

#12 CHOPPER ATTACHMENT (NSF)

#12 CHOPPER ATTACHMENT (NSF)

ILLUS. PL-58785	PART NO.	NAME OF PART	AMT.
1	00-077667-00001	Ring - Adjusting (Brite Metal)	1
2	00-077667-00002	Ring - Adjusting (Tinned)	1
3	00-016423-00001	Chopper Plate (1/8 In. Dia. Holes) (Carbon Steel)	1
4	00-016424-00001	Chopper Plate (3/16 In. Dia. Holes) (Carbon Steel)	1
5	00-016425-00001	Chopper Plate (1/4 In. Dia. Holes) (Carbon Steel)	1
6	00-016426-00001	Chopper Plate (3/8 In. Dia. Holes) (Carbon Steel)	1
7	00-016427-00001	Chopper Plate (1/2 In. Dia. Holes) (Carbon Steel)	1
8	00-103970-00001	Chopper Plate (5/8 In. Dia. Holes) (Carbon Steel)	1
9	00-016429-00001	Chopper Plate (11/16 In. Dia. Holes) (Carbon Steel)	1
10	00-019263-00001	Chopper Plate (5/64 In. Dia. Holes) (Carbon Steel)	1
11	00-016423-00002	Chopper Plate (1/8 In. Dia. Holes) (Stay Sharp)	1
12	00-016424-00002	Chopper Plate (3/16 In. Dia. Holes) (Stay Sharp)	1
13	00-016425-00002	Chopper Plate (1/4 In. Dia. Holes) (Stay Sharp)	1
14	00-016426-00002	Chopper Plate (3/8 In. Dia. Holes) (Stay Sharp)	1
15	00-016427-00002	Chopper Plate (1/2 In. Dia. Holes) (Stay Sharp)	1
16	00-103970-00002	Chopper Plate (5/8 In. Dia. Holes) (Stay Sharp)	1
17	00-016429-00002	Chopper Plate (11/16 In. Dia. Holes) (Stay Sharp)	1
18	00-290339	Knife - Chopper	1
19	00-015877	Stud - Plate	1
20	00-015878	Worm Assy. (Incls. 19, 28, & 30)	1
21	00-122999	Pin - Plate	1
22	00-119759-00001	Chopper Cylinder Assy. (Tinned) (Incls. 21 & 28)	1
23	00-119759-00003	Chopper Cylinder Assy. (Brite Metal) (Incls. 21 & 28)	1
24	00-119759-00004	Chopper Cylinder Assy. (Kosher Tinned)	1
25	00-119759-00005	Chopper Cylinder Assy. (Kosher Brite Metal)	1
26	00-079213	Stud - Locating	1
27	00-122555	Pan - Feed (Rectangular)	1
28	00-003310	Washer - Worm Thrust	1
29	00-004838-00001	Washer - Cylinder Thrust	1
30	00-004284	Stud - Square Drive	1
31	00-295180	Stuffer - Sausage (Sheep Casing) (Packaged)	1
32	00-295181	Stuffer - Sausage (Hog Casing) (Packaged)	1
33	00-119922-00001	Feed Stomper	1
34	00-119860-00001	Cylinder Attachment Assy. (Tinned)	1
35	00-119860-00003	Cylinder Attachment Assy. (Brite Metal)	1
36	00-119860-00004	Cylinder Attachment Assy. (Kosher)	1
37	00-119860-00005	Cylinder Attachment Assy. (Kosher Brite Metal)	1