HOBART

INSTRUCTION MANUAL

... with Replacement Parts

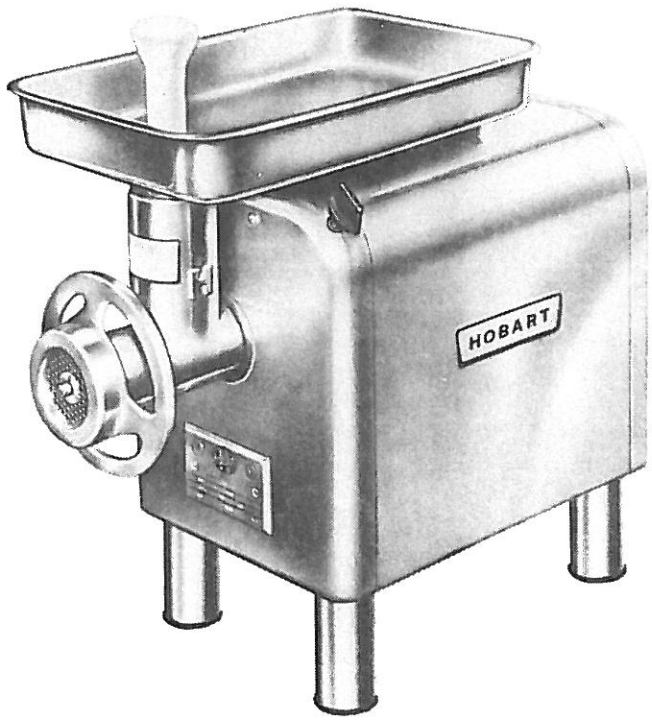

MODEL 4812 CHOPPER

ML-16488

A product of HOBART CORPORATION TROY, OHIO 45374

FORM 6829F (Rev. 5-75) (Supsds. F.6829E, 8-74)

- THIS PAGE PURPOSELY LEFT BLANK -

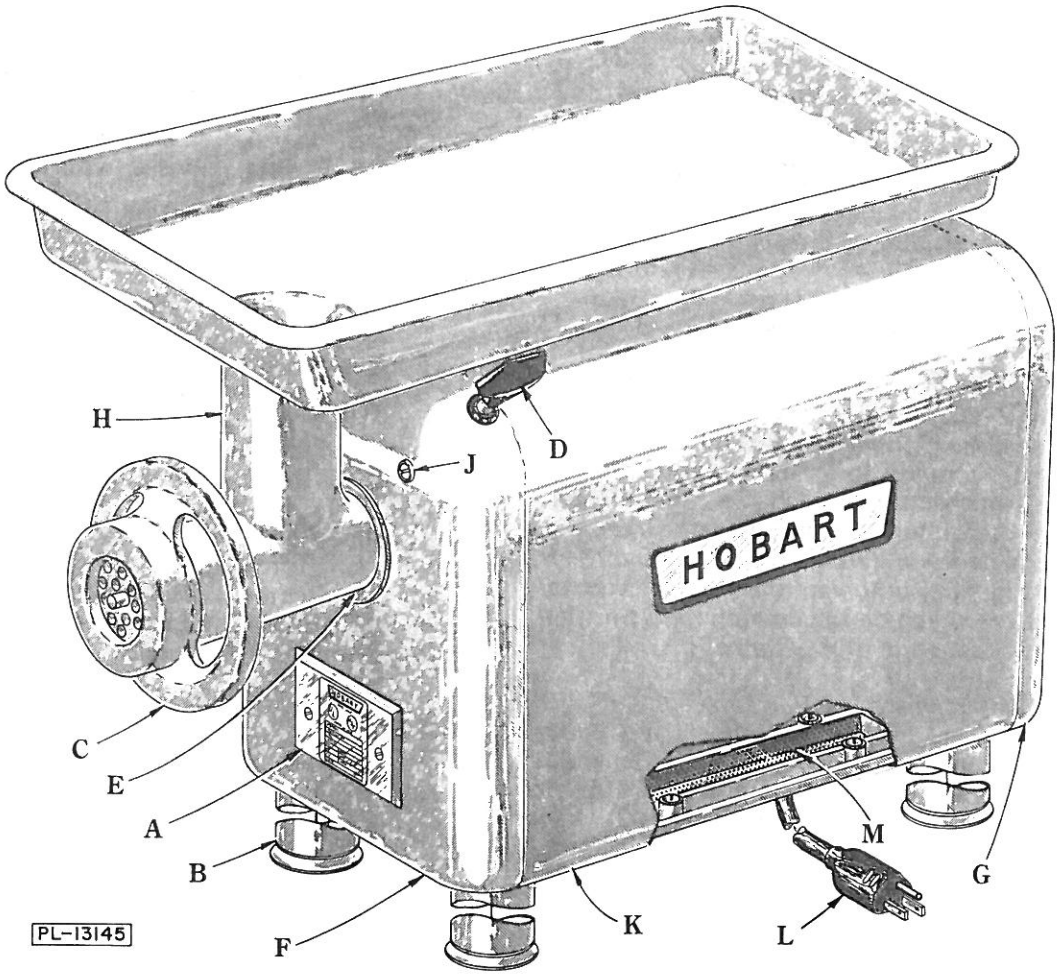

Instructions for Operation and Care of MODEL 4812 CHOPPER

INSTALLATION:

Before making electrical connection, CHECK THE SPECIFICATIONS ON THE NAME PLATE (A) TO MAKE SURE THEY AGREE WITH THOSE OF YOUR ELECTRICAL SERVICE.

Electrical connections should be made by qualified workmen who will observe all applicable Safety Codes and the National Electrical Code.

A cord and plug (L) is furnished as standard equipment on this machine. The base on the under side of the machine is tapped for 1/2" conduit, should a permanent installation be required. Bring the conductors up through this tapped hole and connect directly to the switch on the end of the machine. It is IMPORTANT to use the proper conductor (wire) and fuse sizes. These are listed below and also on the tag attached to the machine.

WIRE AND FUSE SIZES

Volts	Phase	Line Fuse	Wire Size
115	1	30	12
230	1	15	14
208	3	20	14
220	3	20	14

Multiphase motors should be so connected that the attachment runs counter-clockwise facing the attachment hub.

The four leg assemblies (B) are removed and packed in the chopper attachment carton before shipment. Re-assemble these legs by simply screwing them into the four tapped holes of the base. The rubber feet on these legs cushion the machine. Under normal operation, the machine need not be bolted down.

CARE OF CHOPPER ATTACHMENT:

Before using the chopper attachment, remove from machine, take it apart, and wash thoroughly. When re-assembling, apply tasteless oil to the drive shaft and the composition thrust washer of the worm. The knife and plate need some preliminary lubrication; rub tallow over the cutting faces of these parts. When assembling the knife, be sure to turn the cutting side out toward the perforated plate and see that the notch on the circumference of the plate fits over the pin in the bottom of the cylinder.

Do not adjust hand wheel (C) too tight; if the knife and plate are both sharp, only a moderate pressure will be needed. Knives and plates must be sharp and true for proper cutting action. Rub a little tallow over newly-sharpened plates before use. NEVER allow your chopper to run without meat in the chopping end; only a few minutes of such running can ruin a knife and plate.

Wash all parts of the attachment daily, in warm soapsuds.

Take out the entire chopper attachment each time after using, and place it in the refrigerator until it is needed again.

INSERTING CHOPPER ATTACHMENT:

Each day, before assembling the chopper attachment, place a drop of mineral oil into the hole marked "oil" on the hub of the cylinder.

When putting on the chopper attachment, see that both the hub and the socket are clean, and insert with a slight twisting motion toward the left, so that the stop pin in the attachment is in contact with the side of the hole that receives it. Then tighten the thumb screw (D).

To remove the attachment, first turn the thumb screw (D) approximately three revolutions to the left (do not remove the screw), then give the attachment a twist to the right as you pull it out. Never strike the cylinder with an object to loosen it.

HUB DRAIN:

A drain hole in the trim washer (E) allows any meat juices to drain from the hub. This hole should be inspected periodically to make sure that it is free of obstructions; a small wire can be used for removing any material which may have accumulated.

LUBRICATION:

Hobart servicing offices have the current lubricants listed in their lubrication manual. The gears and bearings are packed with special lubricant sufficient to last several years. To gain access to the drain and grease filling plug, it is necessary to remove the front housing panel (F) (see paragraph on "Panel Removal"). Consult a Hobart service technician before adding grease. Lubrication of the chopper attachment is described under the paragraphs "Care of Chopper Attachment" and "Inserting Chopper Attachment".

AIR INTAKE:

Under normal operating conditions the motor air intake screen (M) (located in the base of the chopper)will need little or no attention. However, in some installations where saw dust or other foreign materials are present in the air, this intake screen may become partially or completely covered and throttle the cooling air to the motor. Where an adverse dust condition does exist, periodically check the screen (using an adequate light) and wipe exposed side of screen clean with a rag or brush as required.

PANEL REMOVAL:

To dis-assemble the front panel (F), remove the thumb screw (D) and the chopper cylinder (H); next, remove the four lower screws on the under side of the base, the two upper screws (J), and the four screws that retain the hub trim washer (E). Lift off the panel.

To take off the rear panel (G), remove the two upper screws and the four lower screws on the under side of the base. Remove the panel, being careful not to damage the switch leads.

To remove the center housing (K), after removing the front and rear panels, as described above, dis-assemble the eight screws on the under side of the base. Lift off the center housing.

MEAT CHOPPING:

Cut the meat into strips and feed it into the chopper, using the feed stomper only as needed. If the strips are cut to proper size, they will feed without assistance from the feed stomper, allowing both hands of the operator free to feed meat. When running meat through the chopper a second time, more speed is attained by feeding small quantities at a time, than by trying to force large amounts with the feed stomper.

The feed pan should always be kept in place in the cylinder. It not only makes regular feeding easy, but keeps the chopper attachment ready for immediate use. The fineness to which the meat is cut is governed by the size of the holes in the perforated plate, not by the tension put upon the adjusting ring.

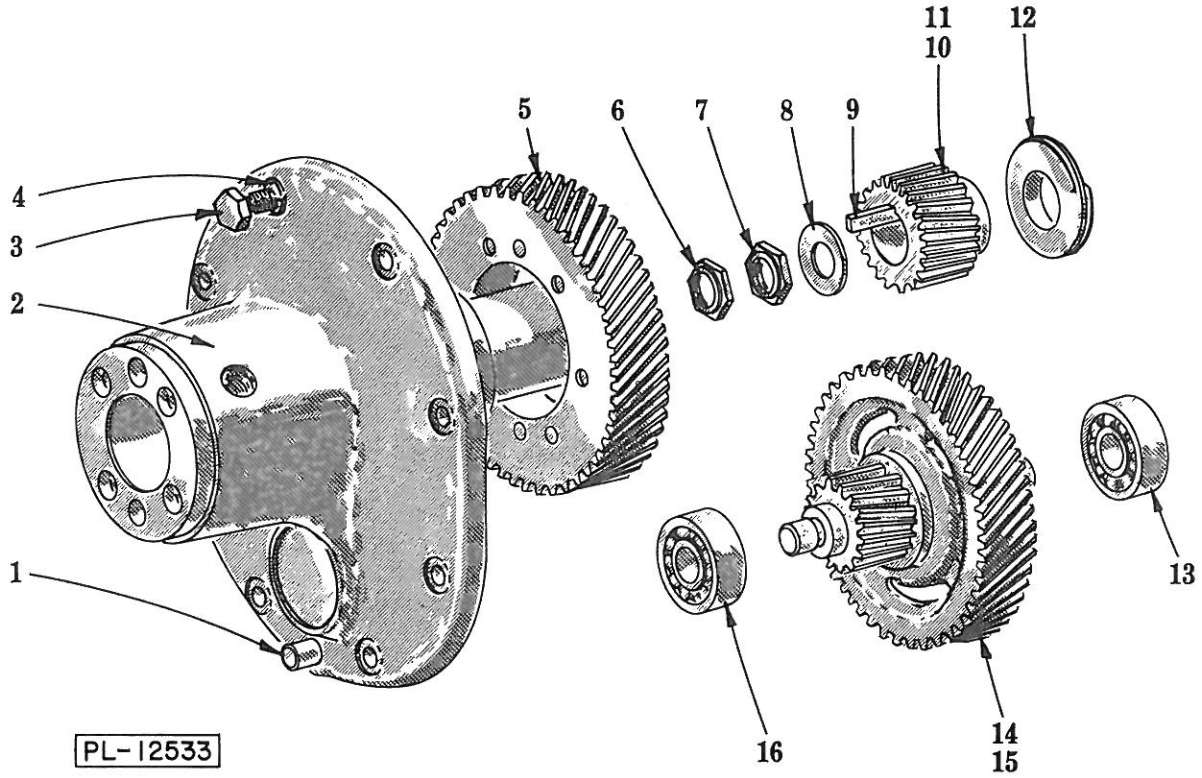

ATTACHMENT HUB AND TRANSMISSION UNIT

ATTACHMENT HUB AND TRANSMISSION UNIT

ILLUS. PL-12533	PART NO.	NAME OF PART	AMT.
1	D-11800-157	Dowel	1
2	D-102328	Attachment Hub & Bushing Sub-Assy.	1
3	SC-37-75	Fin. Bolt - 5/16"-18 x 3/4" Hex Hd.	8
4	WL-3-44	Lock Washer - 5/16" x .125" x .078"	8
5	M-15391	Sq. Drive Flange & Gear Assy. (53T)	1
6	V-4478	Nut - Motor Shaft Lock	1
7	V-10928-2	Nut - Motor Shaft	1
8	WS-8-4	Washer	1
9	R-12430-52	Key	1
10	C-14026	Pinion - Motor (20T) (60 Hz.)	1
11	C-113393	Pinion - Motor (23T) (50 Hz.)	1
12	M-14029	Deflector - Grease	1
13	BB-5-50	Ball Bearing - Fafnir #201K	1
14	C-65130	Main Dr. Gear & Co-Shaft Pinion Assy. (56T) (60 Hz.)	1
15	C-113392	Main Dr. Gear & Co-Shaft Pinion Assy. (53T) (50 Hz.)	1
16	BB-5-50	Ball Bearing - Fafnir #201K	1

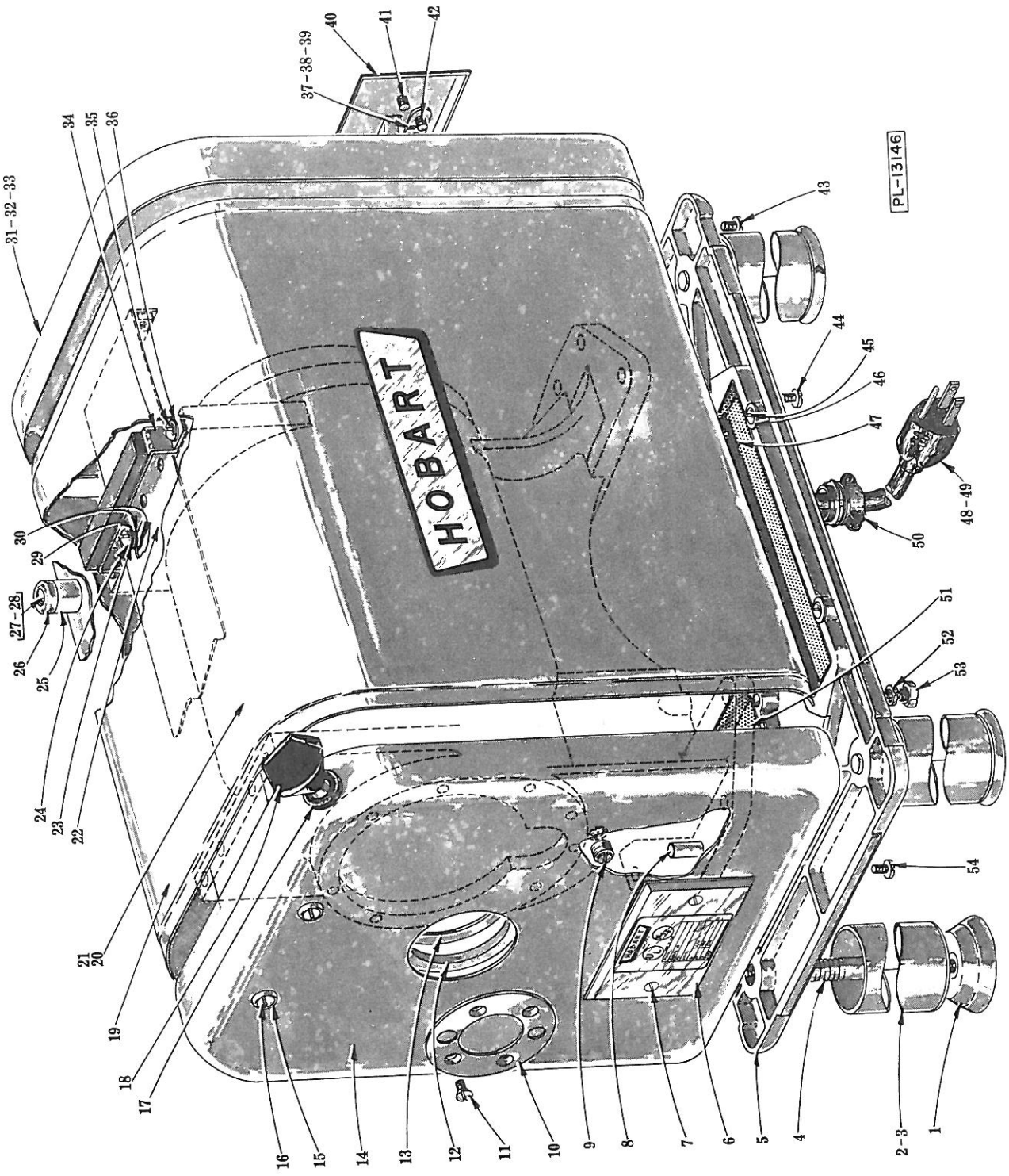

MOTOR AND HOUSING UNIT

MOTOR AND HOUSING UNIT

ILLUS. PL-13146	PART NO.	NAME OF PART	AMT.
1	M-83681	Foot - Rubber	4
2	M-77772	Leg	4
3	M-64814	Cap - Leg End	4
4	M-77771	Stud - Leg (Special)	4
5	T-64925	Sub-Base	1
6	C-117867-1	Plate - Mach. Data (Give Serial No. & Elec. Spec.)	1
7	SC-30-6	Mach. Screw - #6-32 x 3/8" Oval Hd.	2
8	D-11800-141	Dowel	2
9	B-118070-1	Plug - Inspection	1
10	P-65152	Washer - Trim (Attach. Hub)	1
11	SC-22-17	Mach. Screw - #10-24 x 3/8" Flat Hd.	4
12	M-65140	Gasket - Attach. Hub	1
13	M-65142	Washer - Retaining	1
14	S-64965-5	Panel - Front Housing	1
15	WC-4-10	Csk. Washer - #10	2
16	SC-15-36	Mach. Screw - #10-24 x 5/8" Oval Hd.	2
17	M-64824	Grommet (Thumb Screw)	1
18	C-108197-4	Thumb Screw Assy.	1
19	T-64960-3	Housing - Center	1
20	---	Motor (see separate Motor Parts Sheet)	1
21	T-65058	Case - Motor Frame & Gear	1
22	R-65148	Bracket - Front & Rear Locating	1
23	WL-3-37	Lock Washer - 1/4" x .109" x .062"	4
24	SC-8-81	Mach. Screw - 1/4"-20 x 1/2" Rd. Hd.	4
25	M-65999-1	Booster - Bumper	2
26	V-19105-1	Bumper	2
27	SC-60-69	Mach. Screw - #8-32 x 1" Rd. Hd.	2
28	M-74710	Speed Nut - #8-32	2
29	WS-3-20	Washer (STL)	4
30	M-66185	Washer (Rubber)	8
31	S-64805-5	Panel - Rear Housing	1
32	SC-15-36	Mach. Screw - #10-24 x 5/8" Oval Hd.	2
33	WC-4-10	Csk. Washer - #10	2
34	M-65116	Center Panel Brkt. & Compression Strip Sub-Assy.	2
35	SC-8-81	Mach. Screw - 1/4"-20 x 1/2" Rd. Hd.	4
36	WL-3-37	Lock Washer - 1/4" x .109" x .062"	4
37	P-87711-99-4	Switch (1 Ph.)	1
38	P-87711-99-2	Switch (3 Ph. Under 250 V.)	1
39	P-87711-57-1	Switch (3 Ph. Above 250 V.)	1
40	B-103118	Plate - Switch (Use with items #37, 38 & 39)	1
41	SC-30-6	Mach. Screw - #6-32 x 3/8" Oval Hd.	2
42	M-74835	Screw - Switch Mounting	2
43	SC-25-7	Mach. Screw - #10-24 x 5/16" Bind. Hd.	4
44	SC-25-7	Mach. Screw - #10-24 x 5/16" Bind. Hd.	8
45	SC-60-21	Mach. Screw - #10-24 x 1/4" Rd. Hd.	4
46	WS-2-19	Washer	4
47	P-65119	Screen - Air Inlet	1
48	B-117542-7	Cord & Plug Assy. (Under 150 V., 3 Conductor)	1
49	B-117542-12	Cord & Plug Assy. (200-250 V., 3 Conductor)	1
50	FE-2-45	Connector - Cord	1
51	M-65141	Screen - Air Outlet	1
52	WL-3-44	Lock Washer - 5/16" x .125" x .078"	10
53	SC-36-40	Fin. Bolt - 5/16"-18 x 1-1/4" Hex Hd.	10
54	SC-25-7	Mach. Screw - #10-24 x 5/16" Bind. Hd.	4

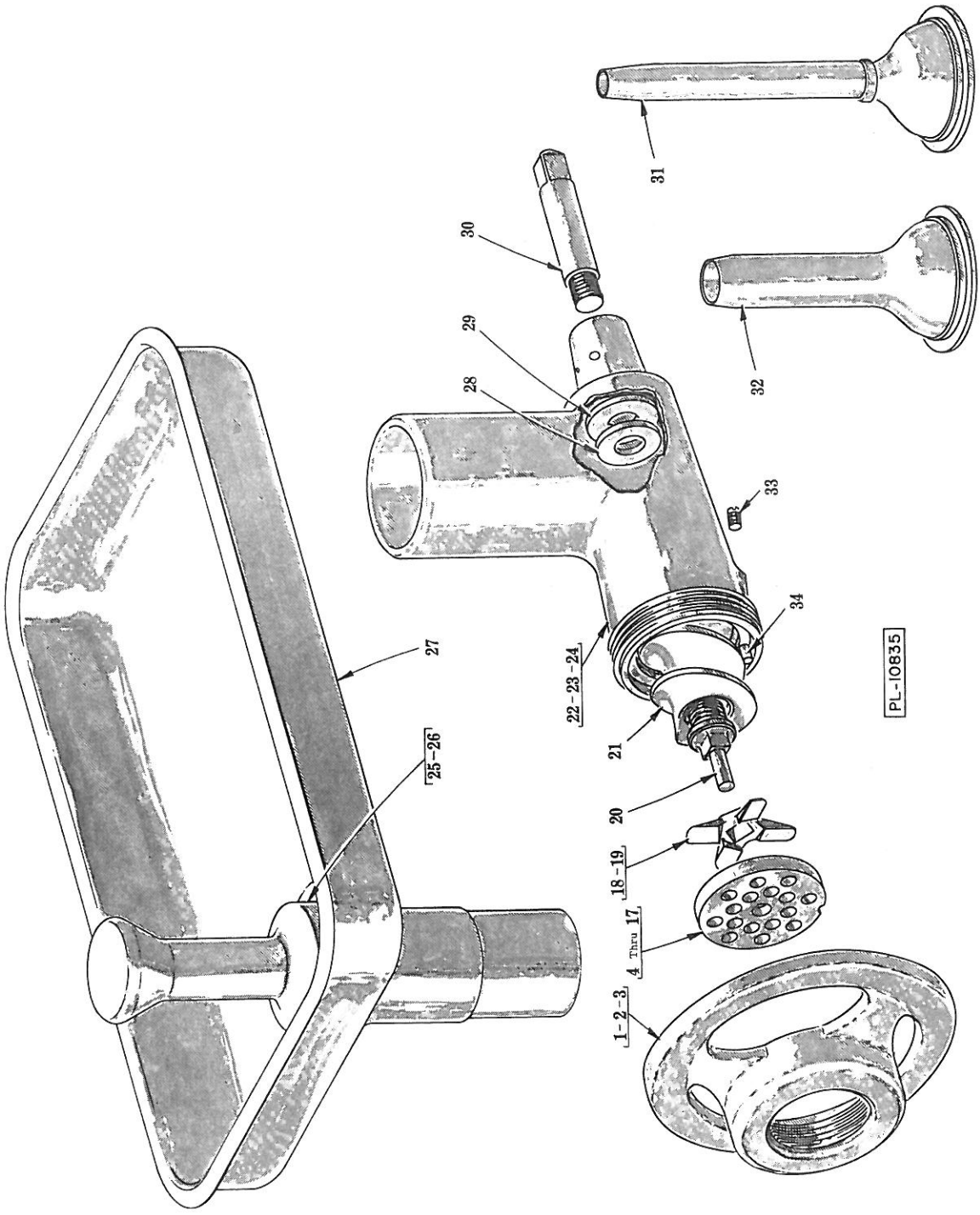

#12 CHOPPER ATTACHMENT UNIT (NSF)

#12 CHOPPER ATTACHMENT UNIT (NSF)
ML-16111, 16112 AND 31124

ILLUS. PL-10835	PART NO.	NAME OF PART	AMT.
1	R-77667-1	Ring - Adjusting (Brite Metal)	1
2	R-77667-2	Ring - Adjusting (Tinned)	1
3	R-77667-3	Ring - Adjusting (Chrome)	1
4	P-16423-1	Chopper Plate (1/8" Dia. Holes) (Carbon Steel)	1
5	P-16424-1	Chopper Plate (3/16" Dia. Holes) (Carbon Steel)	1
6	P-16425-1	Chopper Plate (1/4" Dia. Holes) (Carbon Steel)	1
7	P-16426-1	Chopper Plate (3/8" Dia. Holes) (Carbon Steel)	1
8	M-16427-1	Chopper Plate (1/2" Dia. Holes) (Carbon Steel)	1
9	M-103970-1	Chopper Plate (5/8" Dia. Holes) (Carbon Steel)	1
10	M-16429-1	Chopper Plate (11/16" Dia. Holes) (Carbon Steel)	1
11	P-16423-2	Chopper Plate (1/8" Dia. Holes) (Stay Sharp)	1
12	P-16424-2	Chopper Plate (3/16" Dia. Holes) (Stay Sharp)	1
13	P-16425-2	Chopper Plate (1/4" Dia. Holes) (Stay Sharp)	1
14	P-16426-2	Chopper Plate (3/8" Dia. Holes) (Stay Sharp)	1
15	P-16427-2	Chopper Plate (1/2" Dia. Holes) (Stay Sharp)	1
16	M-103970-2	Chopper Plate (5/8" Dia. Holes) (Stay Sharp)	1
17	M-16429-2	Chopper Plate (11/16" Dia. Holes) (Stay Sharp)	1
18	M-89429	Knife - Chopper (Carbon Steel)	1
19	P-60391	Knife - Chopper (Stay Sharp)	1
20	M-15877	Stud - Plate	1
21	M-15878	Worm Assy. (Incls. items #20, 28 & 30)	1
22	M-77682	Chopper Cyl. Assy. Unit (Brite Metal) (Incls. items #29, 33 & 34)	1
23	M-77683-1	Chopper Cyl. Assy. Unit (Tinned) (Incls. items #29, 33 & 34)	1
24	M-77683-2	Chopper Cyl. Assy. Unit (Chrome) (Incls. items #29, 33 & 34)	1
25	P-89035	Feed Stomper (C. Alum.)	1
26	P-89272-1	Feed Stomper (Plastic)	1
27	S-65156-2	Pan - Feed	1
28	V-3310	Washer - Worm Thrust	1
29	V-4838-1	Washer - Cylinder Thrust	1
30	M-4284	Stud - Sq. Drive	1
31	P-4980	Stuffer - Sausage (Sheep Casing)	1
32	M-5174	Stuffer - Sausage (Hog Casing)	1
33	V-4310	Screw - Plate Pin Retaining	1
34	V-4034	Pin - Plate	1

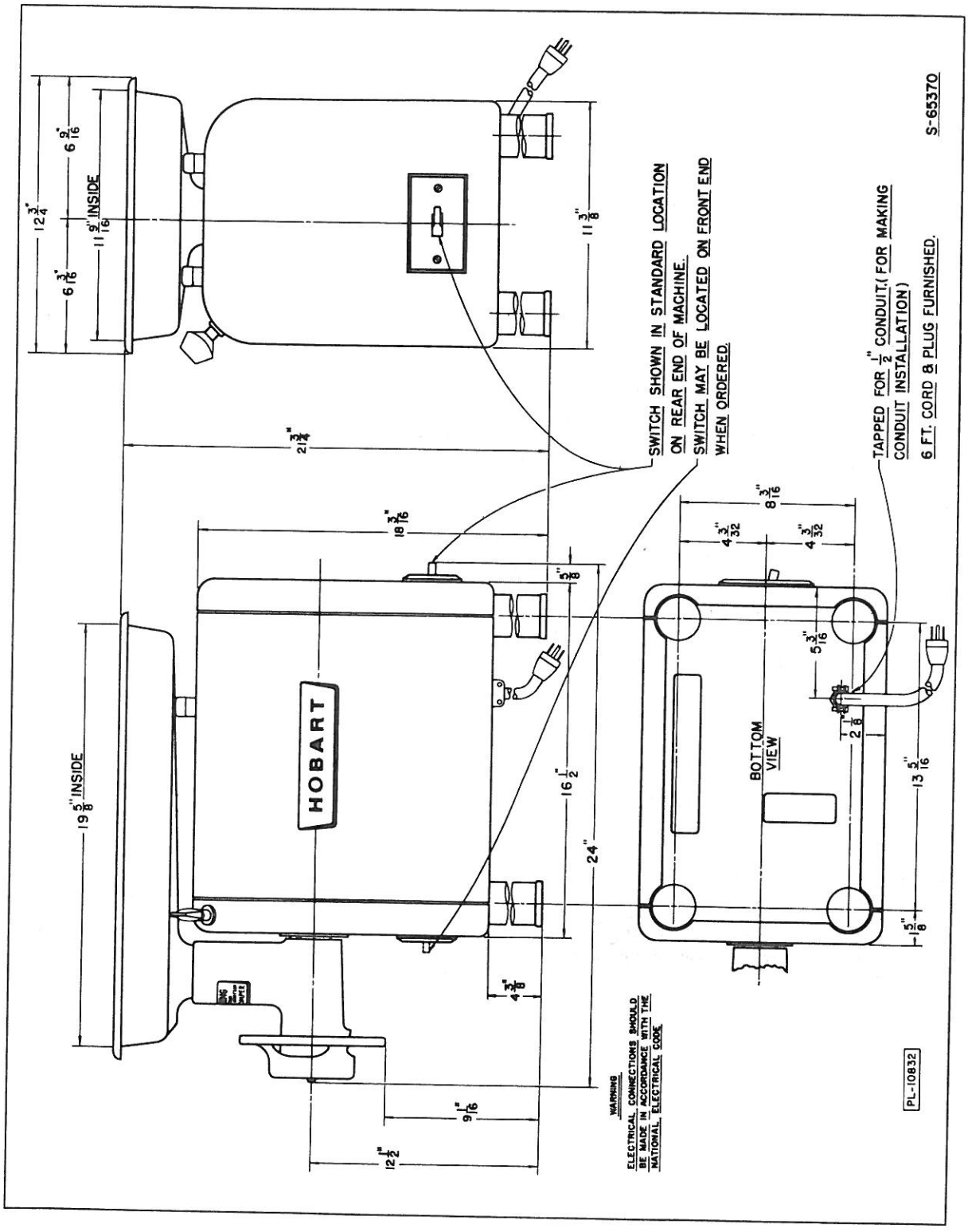

INSTALLATION DIAGRAM