HOBART

CATALOG OF REPLACEMENT PARTS



4812CE CHOPPER

4812CE	**ML-136159**
4812CE	**ML-104734**
4812 (Korean)	**ML-136201**

A product of HOBART 701 S. RIDGE AVENUE TROY, OHIO 45374-0001

FORM 43198 (August 2010)

 © HOBART 2010

Table of Contents

5 ELECTRICAL COMPONENTS
7 HOUSING (ML-136159 & ML-136201)
9 HOUSING (ML-104734)
11 ATTACHMENT HUB AND MOTOR (ML-136159 & ML-136201)
13 MOTOR PARTS (ML-104734)
15 #12 CHOPPER ATTACHMENT (NSF)
16 ATTACHMENT HUB AND TRANSMISSION UNIT (ML-104734)

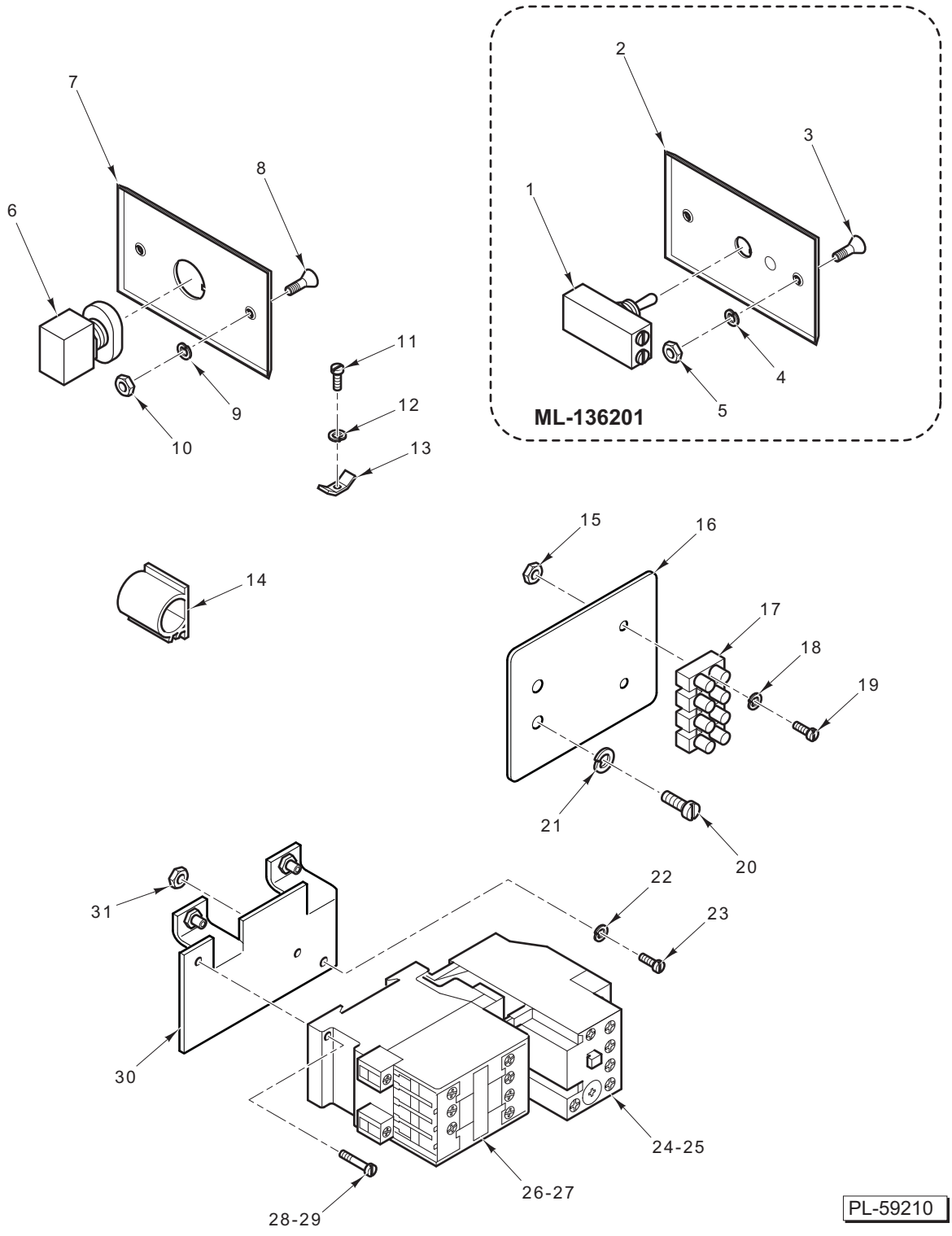

ELECTRICAL COMPONENTS

ELECTRICAL COMPONENTS

ILLUS. PL-59210	PART NO.	NAME OF PART	AMT.
1	00-944059	Switch Assy. (With 2 Harnesses) (ML-136201)	1
2	00-291961	Plate – Switch (ML-136201)	1
3	SC-030-06	Mach. Screw 6-32 x 3/8 Slotted Oval Hd. (ML-136201)	2
4	WL-019-32	Lockwasher #6 External (ML-136201)	2
5	NS-009-07	Nut 6-32 Hex (ML-136201)	2
6	00-087711-232-1	Switch (Start/Stop) (ML-104734 & ML-136159)	1
7	00-119953	Plate – Switch (ML-104734 & ML-136159)	1
8	SC-030-06	Mach. Screw 6-32 x 3/8 Slotted Oval Hd. (ML-104734 & ML-136159)	2
9	WL-019-32	Lockwasher #6 External (ML-104734 & ML-136159)	2
10	NS-009-07	Nut 6-32 Hex (ML-104734 & ML-136159)	2
11	SC-027-29	Mach. Screw 8-32 x 3/8 Slotted Rd. Hd. (ML-104734 & ML-136159)	1
12	WL-010-01	Lockwasher #8 External Shakeproof (ML-104734 & ML-136159)	1
13	00-065890-00090	Terminal – Grounding (ML-104734 & ML-136159)	1
14	00-106825-00002	Clip – Wiring (ML-104734)	1
15	NS-009-07	Nut 6-32 Hex (ML-104734)	2
16	00-478671	Bracket – Terminal Block (ML-104734)	1
17	00-477562-00002	Block – Terminal (ML-104734)	1
18	WL-019-32	Lockwasher #6 External (ML-104734)	2
19	SC-018-24	Mach. Screw 6-32 x 3/4 Phil. Pan Hd. (ML-104734)	2
20	SC-012-49	Mach. Screw 8-32 x 3/8 Slotted Fil. Hd. (ML-104734)	2
21	WL-010-01	Lockwasher #8 External Shakeproof (ML-104734)	2
22	WL-010-01	Lockwasher #8 External Shakeproof (ML-136159)	1
23	SC-027-29	Mach. Screw 8-32 x 3/8 Slotted Rd. Hd. (ML-136159)	1
24	00-914288	Contactor (ML-136159)	1
25	00-914738	Contactor (ML-104734)	1
26	00-914287	Overload (ML-136159)	1
27	00-914739-00001	Overload (ML-104734)	1
28	SC-025-17	Mach. Screw 6-32 x 5/8 Slotted Bndg. Hd. (ML-136159)	2
29	SC-009-67	Mach. Screw 6-32 x 5/8 Slotted Rd. Hd. (ML-104734)	2
30	00-914102	Plate – Electrical Weldment (ML-136159)	1
31	NS-010-11	Nut 8-32 Hex (ML-136159)	2
	00-914280-00001	Plate – Electrical Assy. (Incls Items 22, 23, 24, 26, 28, 30, & 31)	1
	00-438074-00002	Snubber Assy.	1

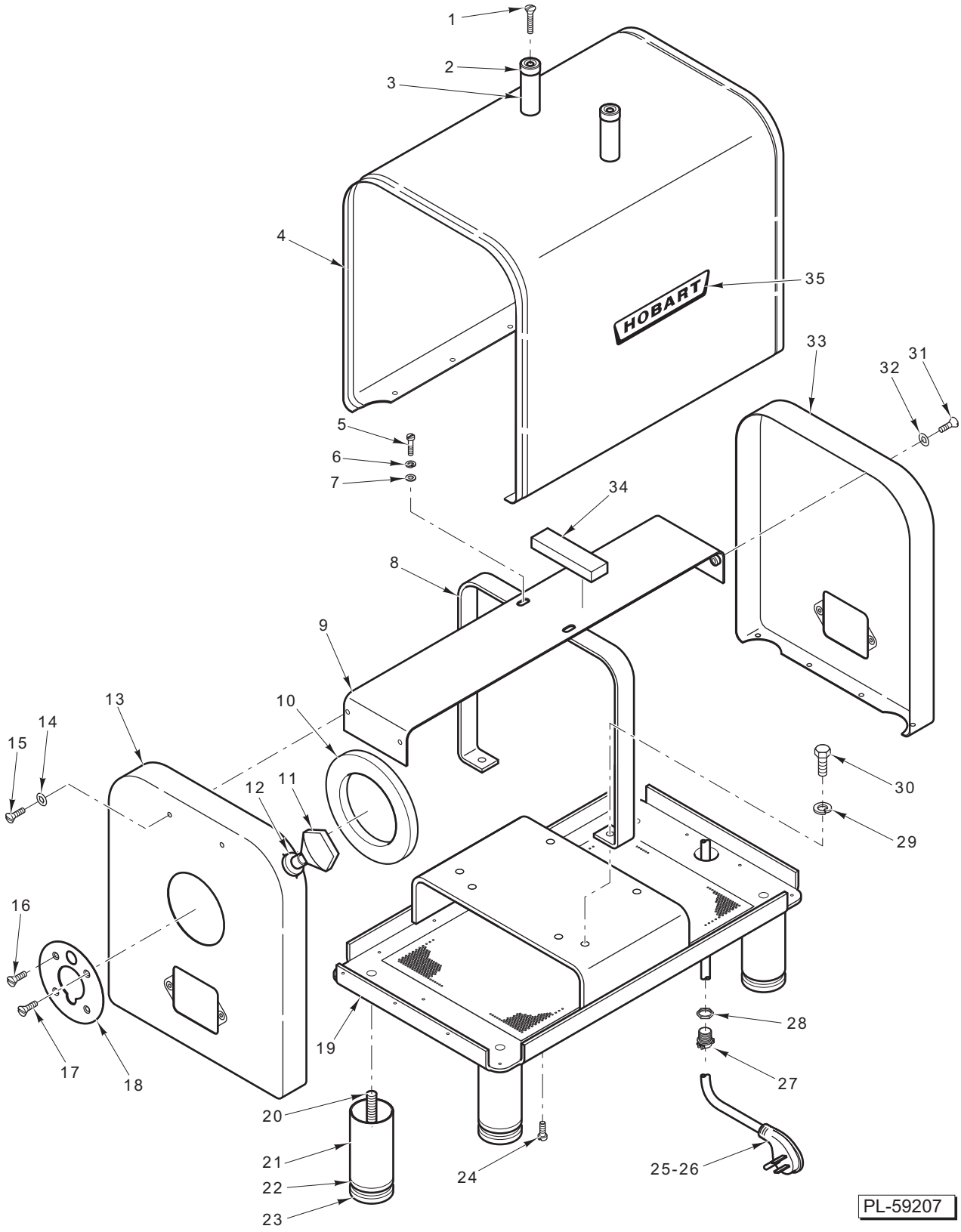

HOUSING (ML-136159 & ML-136201)

HOUSING (ML-136159 & ML-136201)

ILLUS. PL-59207	PART NO.	NAME OF PART	AMT.
1	SC-060-10	Mach. Screw 8-32 x 3 Rd. Hd.	2
2	00-019105-00001	Bumper	2
3	00-119911	Spacer – Pan Rest	2
4	00-290481-00018	Housing Assy.	1
5	SC-010-16	Mach. Screw 10-24 x 1/2 Truss Hd.	2
6	WL-007-12	Lockwasher #10 External Shakeproof	2
7	WS-023-07	Washer	2
8	00-875720	Support – Frame & Housing	1
9	00-875722-00001	Bracket – Locating	1
10	00-065140	Gasket – Attachment Hub	1
11	00-108197-00004	Thumb Screw Assy.	1
12	00-064824	Grommet (Thumb Screw)	1
13	00-064965-00008	Panel – Front Housing	1
14	WC-004-10	Washer – Countersunk	2
15	SC-015-36	Mach. Screw 10-24 x 5/8 Oval Hd.	2
16	SC-022-17	Mach. Screw 10-24 x 3/8 Flat Hd.	3
17	SC-022-16	Mach. Screw 10-24 x 5/16 Flat Hd.	1
18	00-914767	Washer – Trim (Attachment Hub)	1
19	00-875551	Frame Weldment	1
20	00-290061-00002	Stud – Leg	4
21	00-290060-00002	Leg	4
22	00-064814	Cap – Leg End	4
23	00-083681	Foot – Rubber	4
24	SC-025-07	Mach. Screw 10-24 x 5/16 Bndg. Hd.	18
25	00-117542-00024	Cord & Plug Assy. (ML-136159)	1
26	00-117542-00114	Cord & Plug Assy. (ML-136201)	1
27	FE-008-20	Strain Relief	1
28	FE-007-12	Lock Nut 3/4 Electrical	1
29	WL-003-47	Lockwasher 5/16 Medium	2
30	SC-036-40	Cap Screw 5/16-18 x 1 1/4 Hex Hd.	2
31	SC-015-36	Mach. Screw 10-24 x 5/8 Oval Hd.	2
32	WC-004-10	Washer – Countersunk	2
33	00-064805-00008	Panel – Rear Housing	1
34	00-064810	Strip – Compression	2
35	00-118365	Logo – Hobart	1

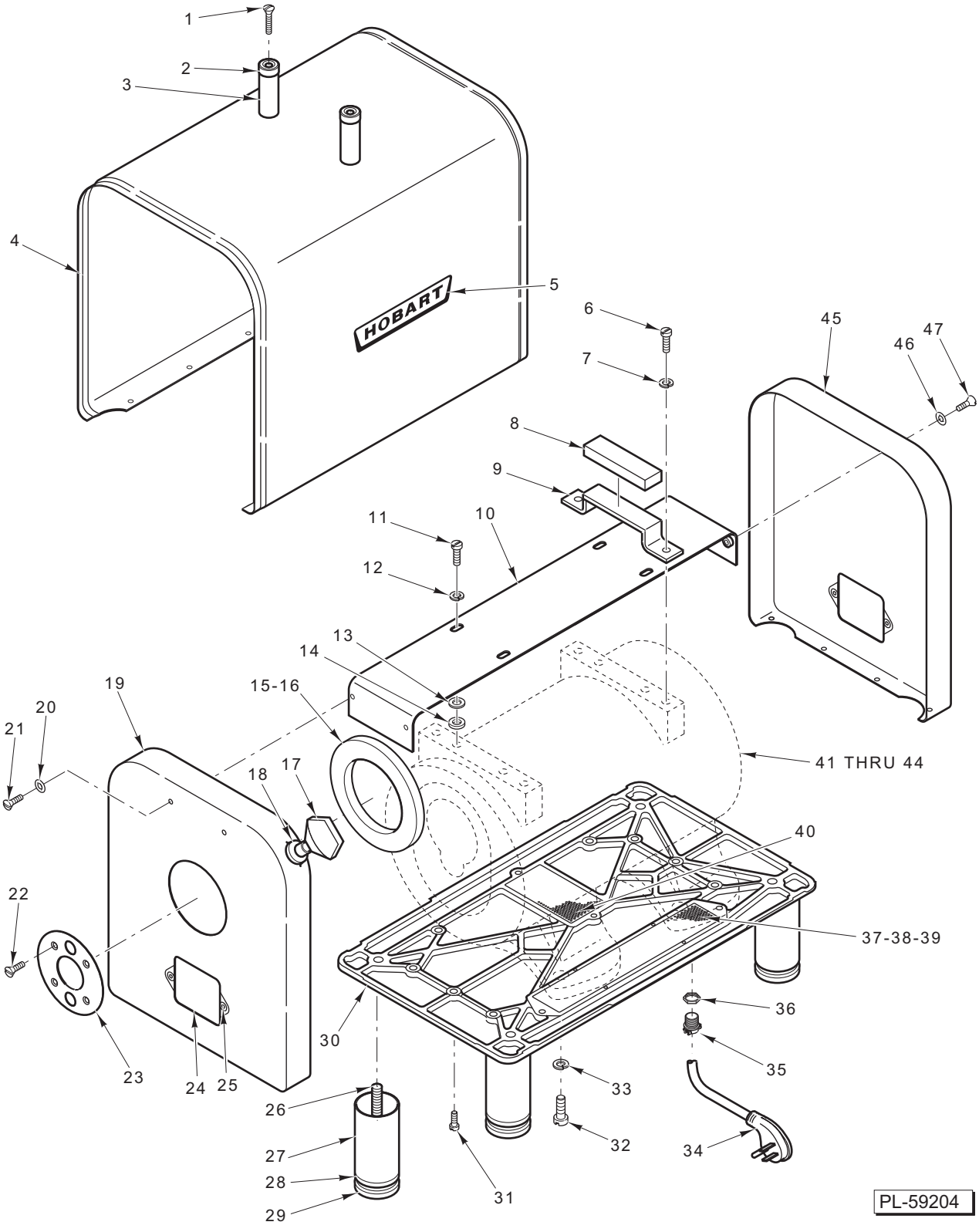

HOUSING (ML-104734)

HOUSING (ML-104734)

ILLUS. PL-59204	PART NO.	NAME OF PART	AMT.
1	SC-060-10	Mach. Screw 8-32 x 3 Rd. Hd.	2
2	00-019105-00001	Bumper	2
3	00-119911	Spacer – Pan Rest	2
4	00-290481-00021	Housing Assy.	1
5	00-118365	Logo – Hobart	1
6	SC-008-81	Mach. Screw 1/4-20 x 1/2 Slotted Rd. Hd.	4
7	WL-003-37	Lockwasher 1/4 Helical	4
8	00-064810	Strip – Compression	2
9	00-065116	Bracket – Center Panel (Incls. Item 8)	2
10	00-065148-00001	Bracket – Locating	1
11	SC-008-81	Mach. Screw 1/4-20 x 1/2 Slotted Rd. Hd.	4
12	WL-003-37	Lockwasher 1/4 Helical	4
13	WS-003-20	Washer	4
14	00-066185	Washer (Rubber)	8
15	00-065140	Gasket – Attachment Hub	1
16	00-065142	Washer – Retaining	1
17	00-108197-00004	Thumb Screw Assy.	1
18	00-064824	Grommet (Thumb Screw)	1
19	00-064965-00008	Panel – Front Housing	1
20	WC-004-10	Washer – Countersunk	2
21	SC-015-36	Mach. Screw 10-24 x 5/8 Oval Hd.	2
22	SC-022-17	Mach. Screw 10-24 x 3/8 Flat Hd.	4
23	00-065152	Washer – Trim (Attachment Hub)	1
24	00-478667	Plate – Data	1
25	SC-030-06	Mach. Screw 6-32 x 3/8 Slotted Oval Hd	2
26	00-290061-00002	Stud – Leg	4
27	00-290060-00002	Leg	4
28	00-064814	Cap – Leg End	4
29	00-083681	Foot – Rubber	4
30	00-102214-00001	Base Assy. (Incls Items 37 thru 40)	1
31	SC-025-07	Mach. Screw 10-24 x 5/16 Bndg. Hd	16
32	SC-036-40	Cap Screw 5/16-18 x 1 1/4 Hex Hd.	10
33	WL-003-47	Lockwasher 5/16 Medium	10
34	00-117542-00024	Cord & Plug Assy.	1
35	FE-008-20	Strain Relief	1
36	FE-007-12	Lock Nut 3/4 Electrical	1
37	SC-008-09	Mach. Screw 10-24 x 3/8 Slotted Rd. Hd.	4
38	WS-002-21	Washer	4
39	00-065119	Screen – Air Inlet	1
40	00-065141	Screen – Air Outlet	1
41	ML-104739-0000z	Motor Assy.	1
42	00-065058	Case – Motor Frame & Gear	1
43	FP-087-12	Pipe Plug 1/8 Hex Socket Hd. (Inspection)	1
44	00-011800-00141	Dowel	2
45	00-064805-00008	Panel – Rear Housing	1
46	WC-004-10	Washer – Countersunk	2
47	SC-015-36	Mach. Screw 10-24 x 5/8 Oval Hd.	2

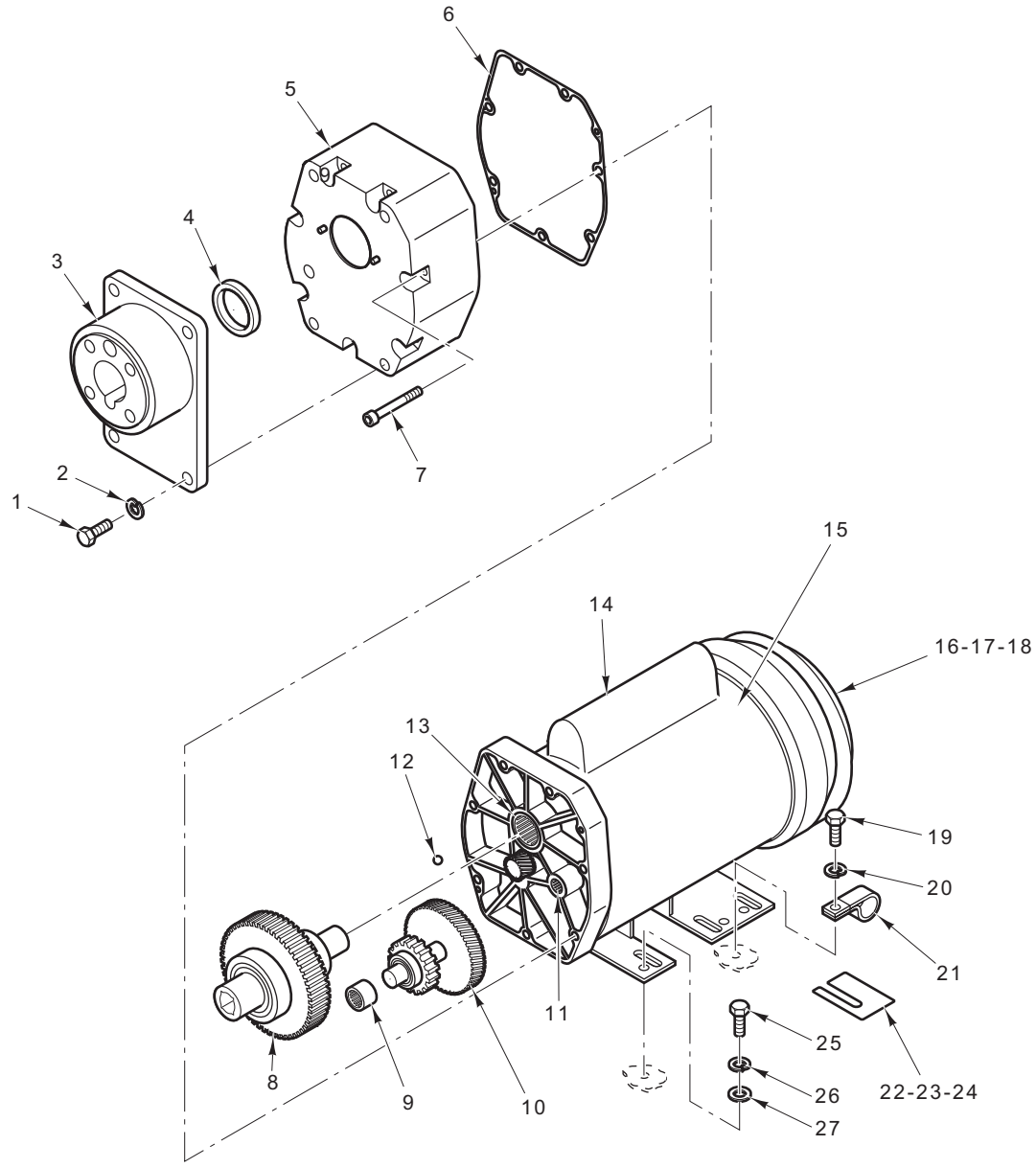

PL-59209

ATTACHMENT HUB AND MOTOR (ML-136159 & ML-136201)

ATTACHMENT HUB AND MOTOR (ML-136159 & ML-136201)

ILLUS. PL-59209	PART NO.	NAME OF PART	AMT.
1	SC-037-86	Cap Screw 7/16-14 x 1 Hex Hd.	4
2	WL-004-10	Lockwasher 7/16 Helical	4
3	00-944045	Adapter – Motor Hub	1
4	00-914156	Seal	2
5	00-914125	Housing Assy.	1
6	00-914131	Gasket	1
7	SC-129-15	Cap Screw 1/4-20 x 2 3/4 Hex Socket Hd.	7
8	00-944046	Gear Assy. (Low Speed) (With Ball Bearing & Thrust Washer)	1
9	00-914252	Bearing – Needle	1
10	00-944047	Gear Assy. (High Speed)	1
11	00-914253	Bearing – Needle	1
12	00-914202	Ball – Steel	3
13	00-914254	Bearing – Needle	1
14	00-944048	Capacitor – Start	1
15	00-944009	Motor (1Ph.)	1
16	00-914251	Washer – Wavy	1
17	00-944049	Fan Kit	1
18	00-944050	Switch – Start	1
19	SC-027-28	Mach. Screw 8-32 x 1/4 Rd. Hd	1
20	WL-011-01	Lockwasher	2
21	00-078752-00004	Clamp – Wire	1
22	00-914128-00001	Shim – Motor (0.005 Thk.)	AR
23	00-914128-00002	Shim – Motor (0.010 Thk.)	AR
24	00-914128-00003	Shim – Motor (0.020 Thk.)	AR
25	SC-036-40	Cap Screw 5/16-18 x 1 1/4 Hex Hd.	4
26	WL-003-47	Lockwasher 5/16 Medium	4
27	WS-029-86	Washer	4
	00-914249	Switch – Motor Start	1
	00-914278	Capacitor – Start	1
	00-914279	Capacitor – Run	1

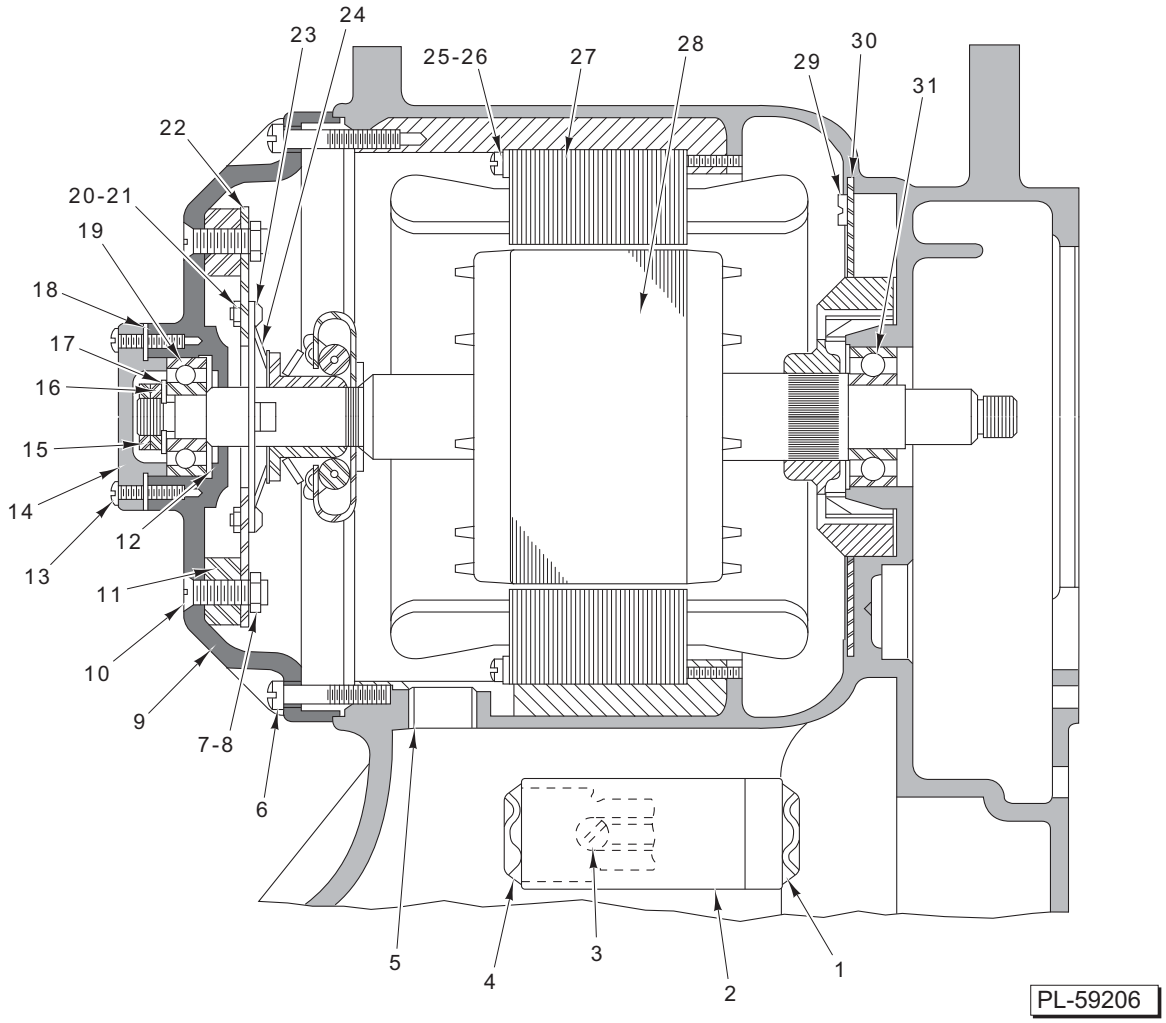

MOTOR PARTS (ML-104734)

MOTOR PARTS (ML-104734)

ILLUS. PL-59206	PART NO.	NAME OF PART	AMT.
1	00-070486-00001	End Cap – Capacitor	1
2	00-070487-00003	Capacitor	1
3	SC-014-57	Mach. Screw 10-24 x 1/2 Slotted Flat Hd.	2
4	00-066621-00001	Bracket – Capacitor	1
5	00-006651	Bushing – Insulating	1
6	SC-011-82	Mach. Screw 1/4-20 x 1 1/4 Slotted Fil. Hd.	4
7	NS-013-02	Nut 1/4-20 Hex	2
8	WL-003-38	Lockwasher 1/4 Helical	2
9	00-089073-00002	Bracket – Bearing	1
10	SC-016-19	Mach. Screw 1/4-20 x 2 Slotted Oval Hd	2
11	00-072818-00004	Post – Switch Retaining Plate	2
12	SL-002-04	Spring – Loading	1
13	SC-009-25	Mach. Screw 10-24 x 5/8 Slotted Rd. Hd.	4
14	00-065219	Cap – Bearing	1
15	00-004478	Lock Nut (Motor Shaft)	1
16	00-010928-00002	Nut – Motor Shaft	1
17	WS-008-04	Washer	1
18	00-014030	Gasket – Bearing Cap	1
19	BB-017-12	Bearing – Ball	1
20	NS-009-07	Nut 6-32 Hex	2
21	WL-003-09	Lockwasher #6 Helical	2
22	00-074738-00002	Switch Plate Assy.	1
23	SC-009-67	Mach. Screw 6-32 x 5/8 Slotted Rd. Hd.	2
24	00-119858-00003	Switch – Starting (Stationary Part)	1
25	SC-011-32	Mach. Screw 10-24 x 3 Slotted Rd. Hd	8
26	WS-002-15	Washer	8
27	00-065477-142-1	Stator Assy.	1
28	00-022275-00279	Rotor Assy.	1
29	SC-018-11	Mach. Screw 10-24 x 3/8 Slotted Pan Hd	3
30	00-065120	Shroud – Fan	1
31	BB-018-43	Bearing – Ball	1
	00-073156	Insulator – Switch	1

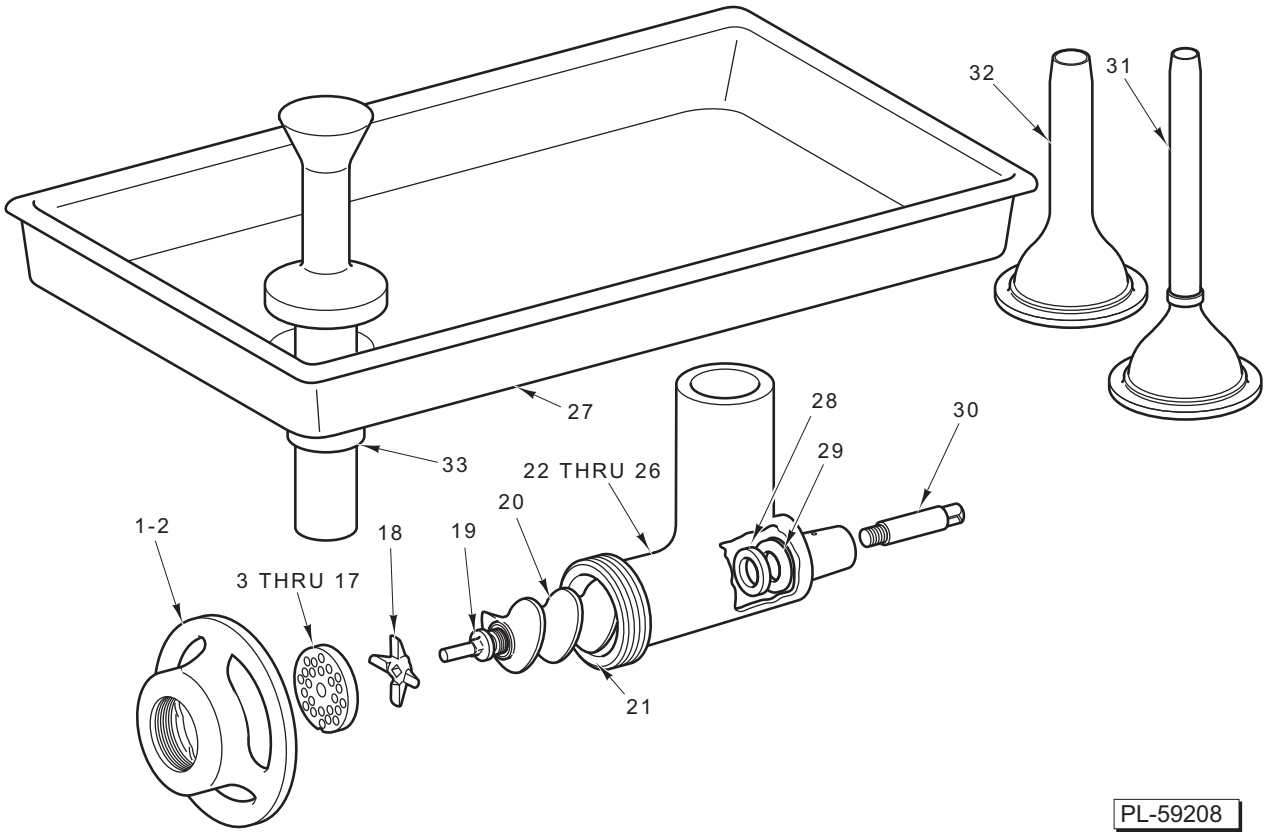

#12 CHOPPER ATTACHMENT (NSF)

#12 CHOPPER ATTACHMENT (NSF)

ILLUS. PL-59208	PART NO.	NAME OF PART	AMT.
1	00-077667-00001	Ring – Adjusting (Brite Metal).	1
2	00-077667-00002	Ring – Adjusting (Tinned)	1
3	00-016423-00001	Chopper Plate (1/8 In. Dia. Holes) (Carbon Steel)	1
4	00-016424-00001	Chopper Plate (3/16 In. Dia. Holes) (Carbon Steel)	1
5	00-016425-00001	Chopper Plate (1/4 In. Dia. Holes) (Carbon Steel)	1
6	00-016426-00001	Chopper Plate (3/8 In. Dia. Holes) (Carbon Steel)	1
7	00-016427-00001	Chopper Plate (1/2 In. Dia. Holes) (Carbon Steel)	1
8	00-103970-00001	Chopper Plate (5/8 In. Dia. Holes) (Carbon Steel)	1
9	00-016429-00001	Chopper Plate (11/16 In. Dia. Holes) (Carbon Steel)	1
10	00-019263-00001	Chopper Plate (5/64 In. Dia. Holes) (Carbon Steel)	1
11	00-016423-00002	Chopper Plate (1/8 In. Dia. Holes) (Stay Sharp)	1
12	00-016424-00002	Chopper Plate (3/16 In. Dia. Holes) (Stay Sharp)	1
13	00-016425-00002	Chopper Plate (1/4 In. Dia. Holes) (Stay Sharp)	1
14	00-016426-00002	Chopper Plate (3/8 In. Dia. Holes) (Stay Sharp)	1
15	00-016427-00002	Chopper Plate (1/2 In. Dia. Holes) (Stay Sharp)	1
16	00-103970-00002	Chopper Plate (5/8 In. Dia. Holes) (Stay Sharp)	1
17	00-016429-00002	Chopper Plate (11/16 In. Dia. Holes) (Stay Sharp)	1
18	00-290339	Knife – Chopper	1
19	00-015877	Stud – Plate	1
20	00-015878	Worm Assy. (Incls. Items 19 & 28)	1
21	00-122999	Pin – Plate	1
22	00-119759-00001	Chopper Cylinder Assy. (Tinned) (Incls. Items 21 & 28)	1
23	00-119759-00003	Chopper Cylinder Assy. (Brite Metal) (Incls. Items 21 & 28)	1
24	00-119759-00004	Chopper Cylinder Assy. (Kosher Tinned)	1
25	00-119759-00005	Chopper Cylinder Assy. (Kosher Brite Metal)	1
26	00-079213	Stud – Locating	1
27	00-122555	Pan – Feed (Rectangular)	1
28	00-003310	Washer – Worm Thrust	1
29	00-004838-00001	Washer – Cylinder Thrust.	1
30	00-004284	Stud – Square Drive	1
31	00-295180	Stuffer – Sausage (Sheep Casing) (Packaged)	1
32	00-295181	Stuffer – Sausage (Hog Casing) (Packaged)	1
33	00-119922-00001	Feed Stomper	1
	00-119860-00001	Cylinder Attachment Assy. (Tinned)	1
	00-119860-00003	Cylinder Attachment Assy. (Brite Metal)	1
	00-119860-00004	Cylinder Attachment Assy. (Kosher)	1
	00-119860-00005	Cylinder Attachment Assy. (Kosher Brite Metal)	1

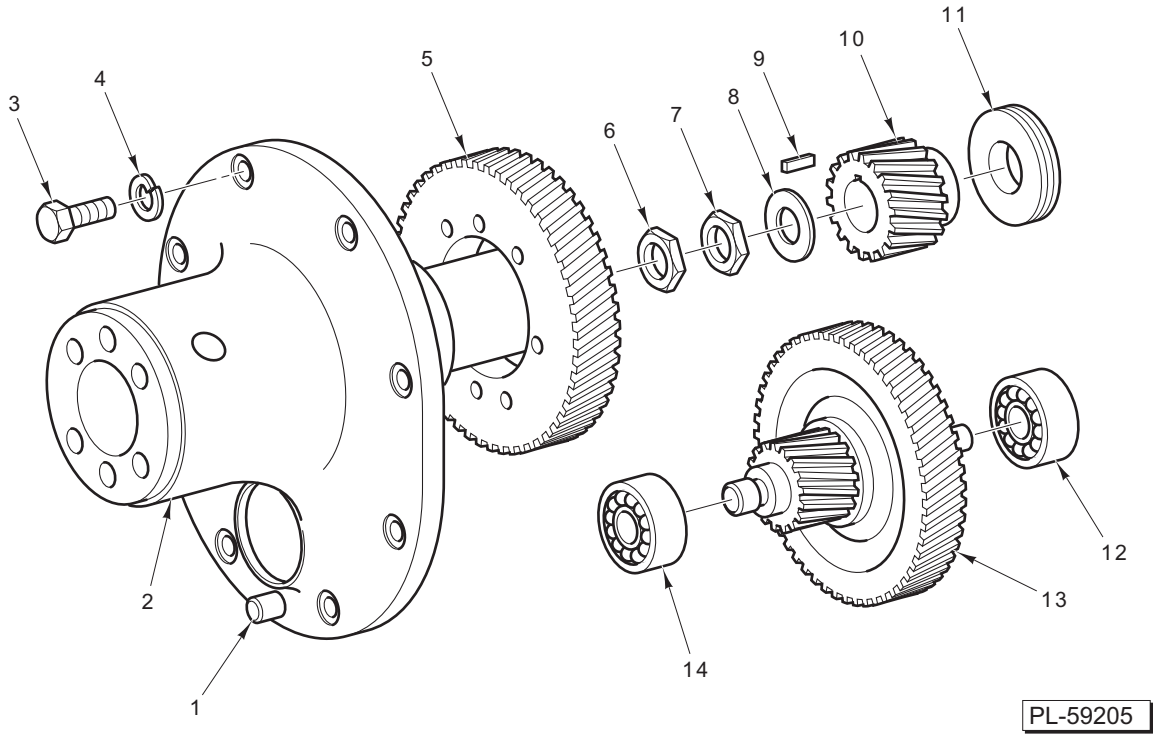

ATTACHMENT HUB AND TRANSMISSION UNIT (ML-104734)

ILLUS. PL-59205	PART NO.	NAME OF PART	AMT.
1	00-011800-00157	Dowel	1
2	00-102328	Attachment Hub & Bushing Assy.	1
3	SC-037-75	Cap Screw 5/16-18 x 3/4 Hex Hd.	8
4	WL-003-47	Lockwasher 5/16 Helical	8
5	00-015391	Square Drive Flange & Gear Assy. (53T)	1
6	00-004478	Lock Nut (Motor Shaft)	1
7	00-010928-00002	Nut – Motor Shaft	1
8	WS-008-04	Washer	1
9	00-109070-00004	Key	1
10	00-113393	Pinion – Motor (23T)	1
11	00-014029	Deflector – Grease	1
12	BB-005-20	Bearing – Ball	1
13	00-113392	Main Drive Gear & Co-Shaft Pinion Assy. (53T)	1
14	BB-005-20	Bearing – Ball	1