CATALOG OF REPLACEMENT PARTS



4822 CHOPPER

ML-136125

PRIOR ML COVERED IN THIS MANUAL

ML-136102

A product of HOBART 701 S. RIDGE AVENUE TROY, OHIO 45374-0001

FORM 43093 Rev. D (July 2012)

 © HOBART 2012

Table of Contents

5 ELECTRICAL UNIT
7 #22 CHOPPER ATTACHMENT UNIT (NSF)
9 #22 FS CHOPPER ATTACHMENT UNIT (NSF)
11 HOUSING UNIT
13 ATTACHMENT HUB AND MOTOR

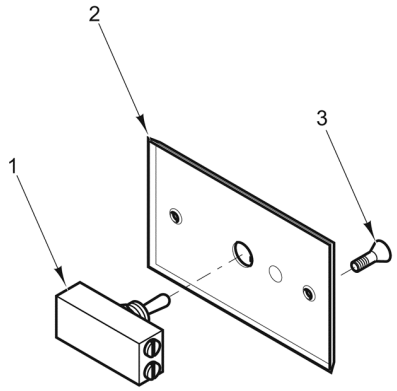

1 PHASE

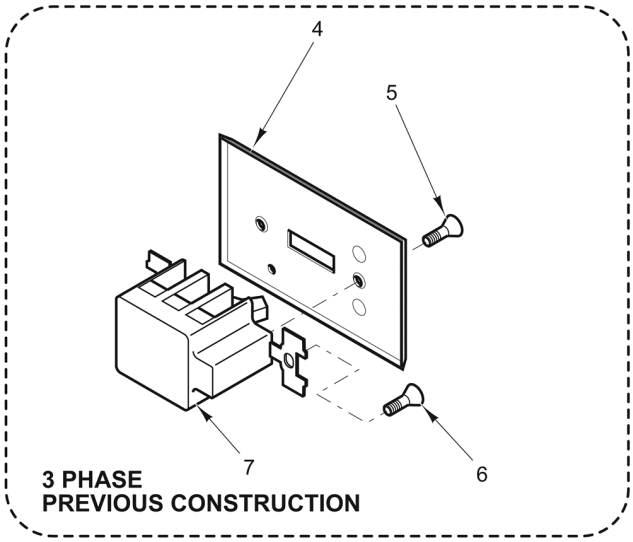

3 PHASE
PREVIOUS CONSTRUCTION

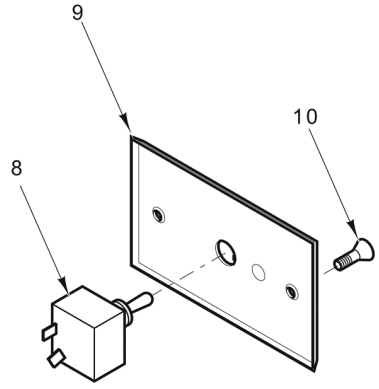

3 PHASE
CURRENT CONSTRUCTION

PL-57377

ELECTRICAL UNIT

ELECTRICAL UNIT

ILLUS. PL-57377	PART NO.	NAME OF PART	AMT.
1	00-944059	Switch Assy. (With Two Harnesses) (1 Ph.)	1
2	00-291961	Plate - Switch (1 Ph.)	1
3	SC-030-06	Mach. Screw 6-32 x 3/8 Slotted Oval Hd. (Brass) (1 Ph.)	2
4	00-124564-00002	Plate - Switch (3 Ph.) (Previous Construction)	1
5	SC-030-06	Mach. Screw 6-32 x 3/8 Slotted Oval Hd. (Brass) (3 Ph.) (Previous Construction)	2
6	00-074835	Screw - Switch Mounting (3 Ph.) (Previous Construction)	2
7	00-087711-138-1	Switch (3 Ph.) (Previous Construction)	1
8	00-087711-140-1	Switch (3 Ph.) (Current Construction)	1
9	00-291961	Plate - Switch (3 Ph.) (Current Construction)	1
10	SC-030-06	Mach. Screw 6-32 x 3/8 Slotted Oval Hd. (Brass) (3 Ph.) (Current Construction)	2

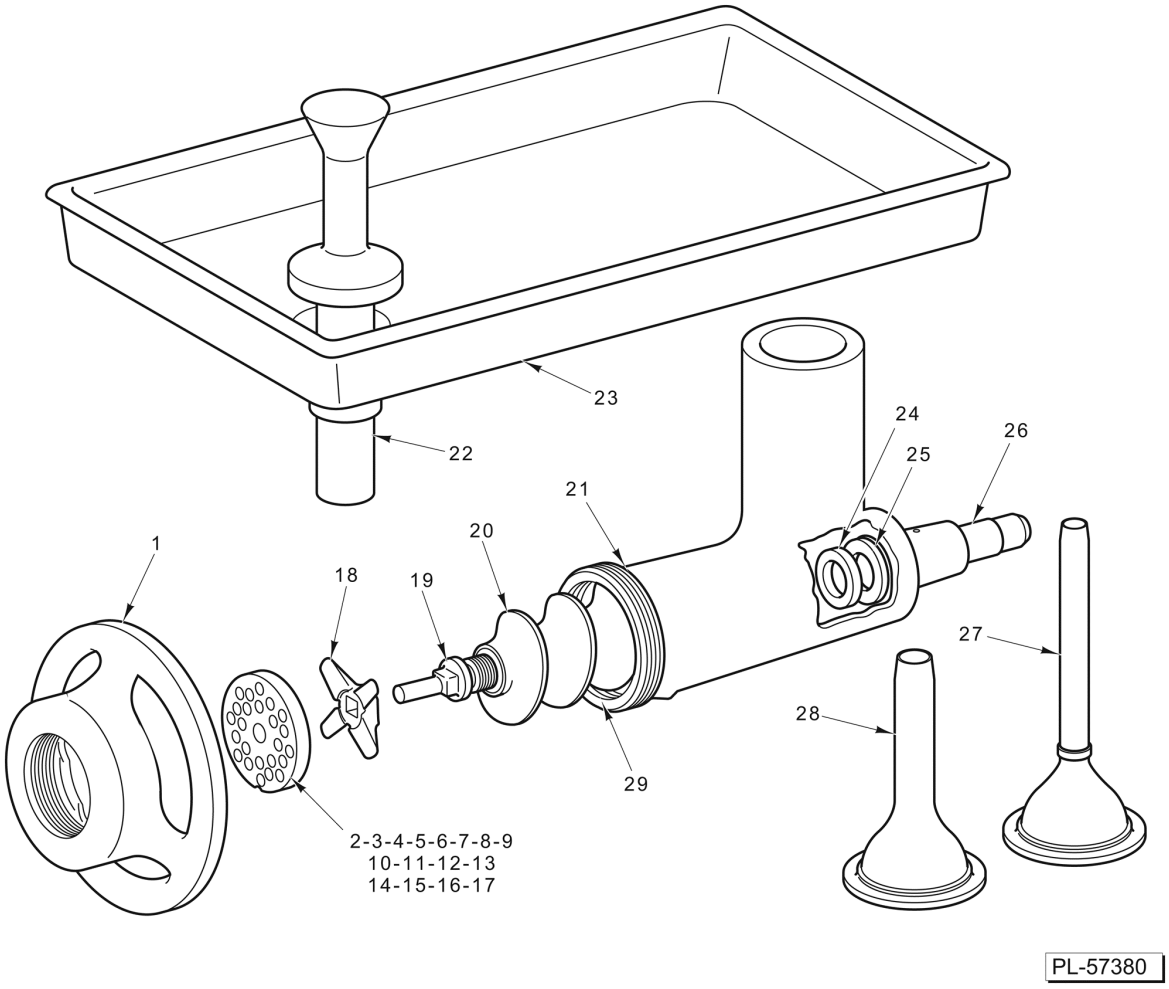

#22 CHOPPER ATTACHMENT UNIT (NSF)

#22 CHOPPER ATTACHMENT UNIT (NSF)

ILLUS. PL-57380	PART NO.	NAME OF PART	AMT.
1	00-077643-00002	Ring - Adjusting (Tinned)	1
2	00-016430-00001	Chopper Plate (1/8 In. Dia. Holes) (Carbon Steel)	1
3	00-016431-00001	Chopper Plate (3/16 In. Dia. Holes) (Carbon Steel)	1
4	00-016432-00001	Chopper Plate (1/4 In. Dia. Holes) (Carbon Steel)	1
5	00-016433-00001	Chopper Plate (3/8 In. Dia. Holes) (Carbon Steel)	1
6	00-016434-00001	Chopper Plate (1/2 In. Dia. Holes) (Carbon Steel)	1
7	00-103969-00001	Chopper Plate (5/8 In. Dia. Holes) (Carbon Steel)	1
8	00-016436-00001	Chopper Plate (3/4 In. Dia. Holes) (Carbon Steel)	1
9	00-016437-00001	Chopper Plate (15/16 In. Dia. Holes) (Carbon Steel)	1
10	00-016430-00002	Chopper Plate (1/8 In. Dia. Holes) (Stay Sharp)	1
11	00-016431-00002	Chopper Plate (3/16 In. Dia. Holes) (Stay Sharp)	1
12	00-016432-00002	Chopper Plate (1/4 In. Dia. Holes) (Stay Sharp)	1
13	00-016433-00002	Chopper Plate (3/8 In. Dia. Holes) (Stay Sharp)	1
14	00-016434-00002	Chopper Plate (1/2 In. Dia. Holes) (Stay Sharp)	1
15	00-103969-00002	Chopper Plate (5/8 In. Dia. Holes) (Stay Sharp)	1
16	00-016436-00002	Chopper Plate (3/4 In. Dia. Holes) (Stay Sharp)	1
17	00-016437-00002	Chopper Plate (15/16 In. Dia. Holes) (Stay Sharp)	1
18	00-290372	Knife - Chopper (Stay Sharp)	1
19	00-015880	Stud - Plate	1
20	00-015881	Worm Assy. (Incls. Items 19, 24, & 26)	1
21	00-119760-00001	Chopper Cylinder Assy. (Tinned) (Incls. Items 25 & 29)	1
22	00-122554	Feed Stomper (Plastic)	1
23	00-122555	Pan - Feed	1
24	00-004221	Washer - Worm Thrust	1
25	00-004839-00001	Washer - Cylinder Thrust	1
26	00-007201	Stud - Square Drive	1
27	00-295184	Stuffer - Sausage (Sheep Casing) (Packaged)	1
28	00-295182	Stuffer - Sausage (Hog Casing) (Packaged)	1
29	00-122983	Pin - Plate	1

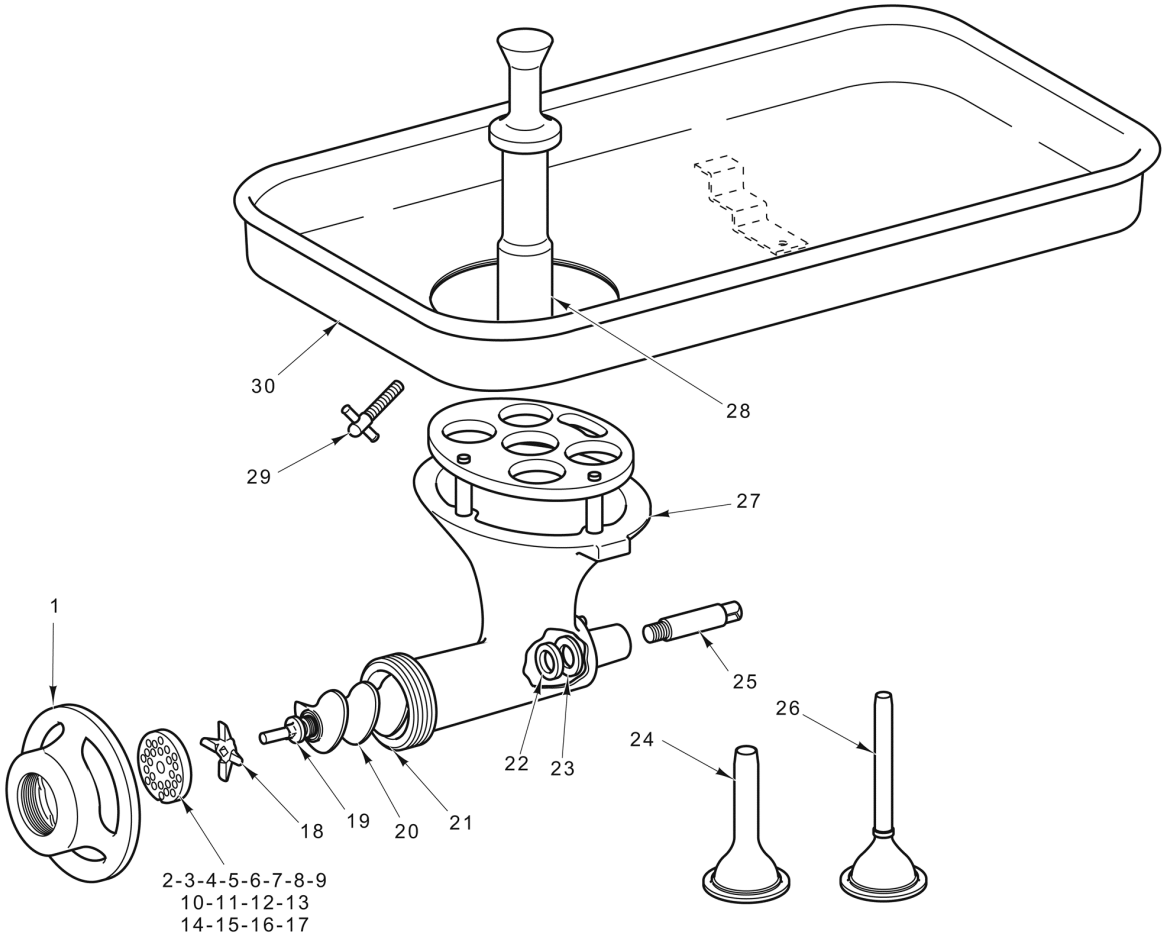

#22 FS CHOPPER ATTACHMENT UNIT (NSF)

#22 FS CHOPPER ATTACHMENT UNIT (NSF)

ILLUS. PL-57381	PART NO.	NAME OF PART	AMT.
1	00-077643-00002	Ring - Adjusting	1
2	00-016430-00001	Chopper Plate (1/8 In. Dia. Holes) (Carbon Steel)	1
3	00-016431-00001	Chopper Plate (3/16 In. Dia. Holes) (Carbon Steel)	1
4	00-016432-00001	Chopper Plate (1/4 In. Dia. Holes) (Carbon Steel)	1
5	00-016433-00001	Chopper Plate (3/8 In. Dia. Holes) (Carbon Steel)	1
6	00-016434-00001	Chopper Plate (1/2 In. Dia. Holes) (Carbon Steel)	1
7	00-103969-00001	Chopper Plate (5/8 In. Dia. Holes) (Carbon Steel)	1
8	00-016436-00001	Chopper Plate (3/4 In. Dia. Holes) (Carbon Steel)	1
9	00-016437-00001	Chopper Plate (15/16 In. Dia. Holes) (Carbon Steel)	1
10	00-016430-00002	Chopper Plate (1/8 In. Dia. Holes) (Stay Sharp)	1
11	00-016431-00002	Chopper Plate (3/16 In. Dia. Holes) (Stay Sharp)	1
12	00-016432-00002	Chopper Plate (1/4 In. Dia. Holes) (Stay Sharp)	1
13	00-016433-00002	Chopper Plate (3/8 In. Dia. Holes) (Stay Sharp)	1
14	00-016434-00002	Chopper Plate (1/2 In. Dia. Holes) (Stay Sharp)	1
15	00-103969-00002	Chopper Plate (5/8 In. Dia. Holes) (Stay Sharp)	1
16	00-016436-00002	Chopper Plate (3/4 In. Dia. Holes) (Stay Sharp)	1
17	00-016437-00002	Chopper Plate (15/16 In. Dia. Holes) (Stay Sharp)	1
18	00-290372	Knife - Chopper (Stay Sharp)	1
19	00-015880	Stud - Plate	1
20	00-068338	Worm Assy. (Incls. Items 19, 22, & 25)	1
21	00-122983	Pin - Plate	1
22	00-004221	Washer - Worm Thrust	1
23	00-004839-00001	Washer - Cylinder Thrust	1
24	00-295182	Stuffer - Sausage (Hog Casing) (Packaged)	1
25	00-007201	Stud - Square Drive	1
26	00-295184	Stuffer - Sausage (Sheep Casing) (Packaged)	1
27	00-085386	Chopper Cylinder & Guard Assy. (Guard 1-3/8 High) (Incls. Items 21 & 23)	1
28	00-089272-00008	Feed Stomper (Plastic)	1
29	00-022306	Clamp Screw Assy	1
30	00-437381	Feed Pan Assy. (SST) (Incls. item 29)	1

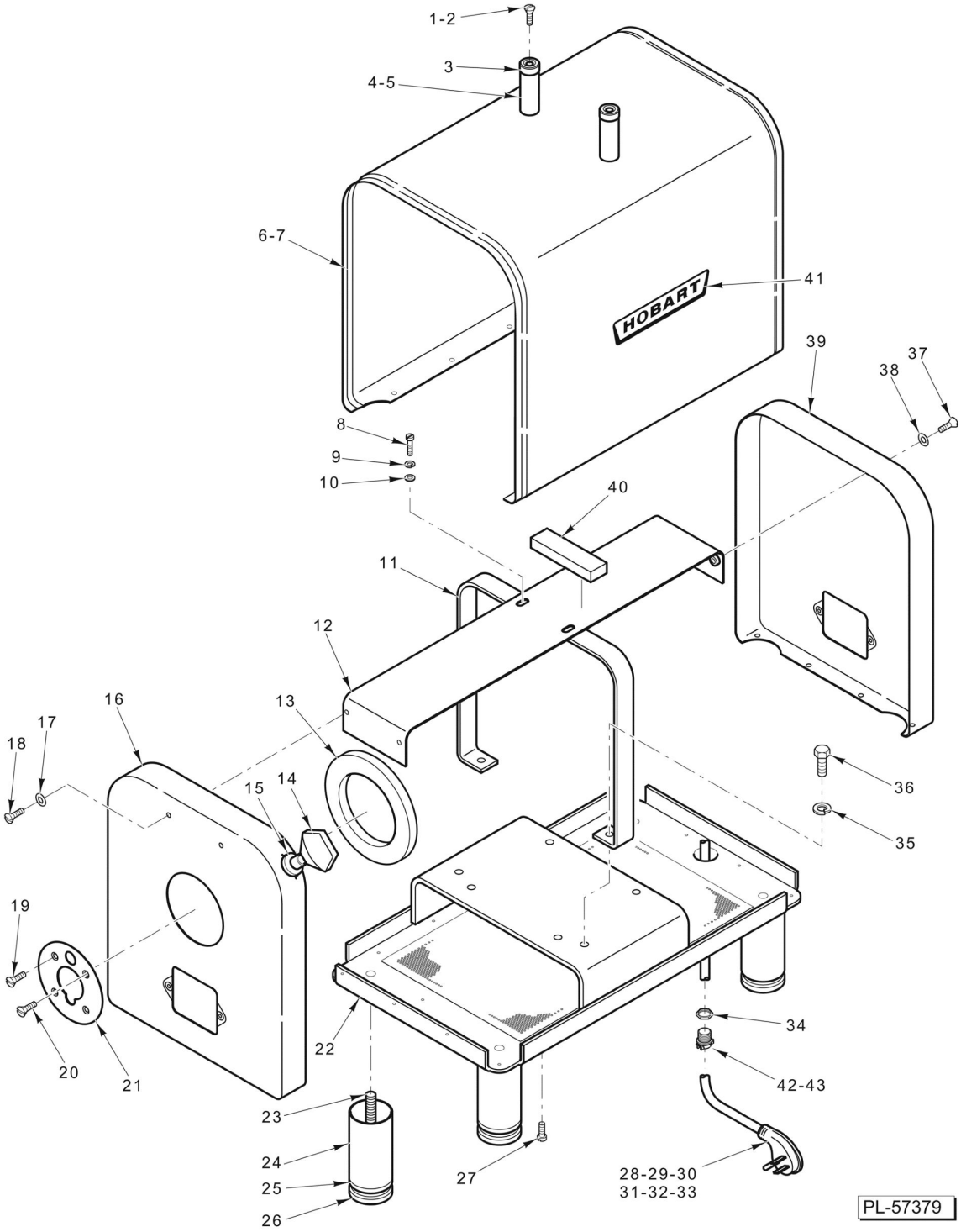

HOUSING UNIT

HOUSING UNIT

ILLUS. PL-57379	PART NO.	NAME OF PART	AMT.
1	SC-060-10	Mach. Screw 8-32 x 3 Slotted Rd. Hd	2
2	SC-009-96	Mach. Screw 8-32 x 1-1/4 Slotted Rd. Hd. (Use with FS Chopper Attachment)	2
3	00-019105-00001	Bumper	2
4	00-119911	Spacer - Pan Rest	2
5	00-065999-00002	Spacer - Pan Rest (Use with FS Chopper Attachment)	2
6	00-290481-00018	Housing Assy. (60 Hz.)	1
7	00-290481-00019	Housing Assy. (50 Hz.)	1
8	SC-010-16	Mach. Screw 10-24 x 1/2 Slotted Truss Hd	2
9	WL-007-12	Lockwasher #10 External Shakeproof	2
10	WS-023-07	Washer	2
11	00-875720	Support - Frame & Housing	1
12	00-875722-00001	Bracket - Locating	1
13	00-064818	Gasket - Attachment Hub	1
14	00-108197-00004	Thumb Screw Assy	1
15	00-064824	Grommet (Thumb Screw)	1
16	00-064804-00008	Panel - Front Housing	1
17	WC-004-10	Washer - Countersunk	2
18	SC-015-36	Mach. Screw 10-24 x 5/8 Slotted Oval Hd	2
19	SC-022-17	Mach. Screw 10-24 x 3/8 Slotted Flat Hd. (SST)	3
20	SC-022-16	Mach. Screw 10-24 x 5/16 Slotted Flat Hd. (SST)	1
21	00-914106	Washer - Trim (Attachment Hub)	1
22	00-875551	Frame Weldment	1
23	00-290061-00002	Stud - Leg	4
24	00-290060-00002	Leg	4
25	00-064814	Cap - Leg End	4
26	00-083681	Foot - Rubber	4
27	SC-025-07	Mach. Screw 10-24 x 5/16 Slotted Bndg. Hd. (SST)	18
28	00-117542-00098	Cord & Plug Assy. (120 V., 60 Hz., 1 Ph.)	1
29	00-916909-00027	Cord & Plug Assy. (240 V., 60 Hz., 1 Ph.)	1
30	00-117612-00020	Cord & Plug Assy. (208-240 V., 60 Hz., 3 Ph.) (Previous Construction)	1
31	00-117612-00021	Cord & Plug Assy. (480 V., 60 Hz., 3 Ph.) (Previous Construction)	1
32	00-916909-00025	Cord & Plug Assy. (208-240 V., 60 Hz., 3 Ph.) (Current Construction)	1
33	00-916909-00026	Cord & Plug Assy. (480 V., 60 Hz., 3 Ph.) (Current Construction)	1
34	FE-007-12	Lock Nut 3/4 Electrical	1
35	WL-003-47	Lockwasher 5/16 Helical	2
36	SC-036-40	Cap Screw 5/16-18 x 1-1/4 Hex Hd	2
37	SC-015-36	Mach. Screw 10-24 x 5/8 Slotted Oval Hd	2
38	WC-004-10	Washer - Countersunk	2
39	00-064805-00008	Panel - Rear Housing	1
40	00-064810	Strip - Compression	2
41	00-118365	Logo (Hobart)	1
42	FE-008-20	Strain Relief (1 Ph.)	1
43	FE-015-38	Strain Relief (3 Ph.)	1

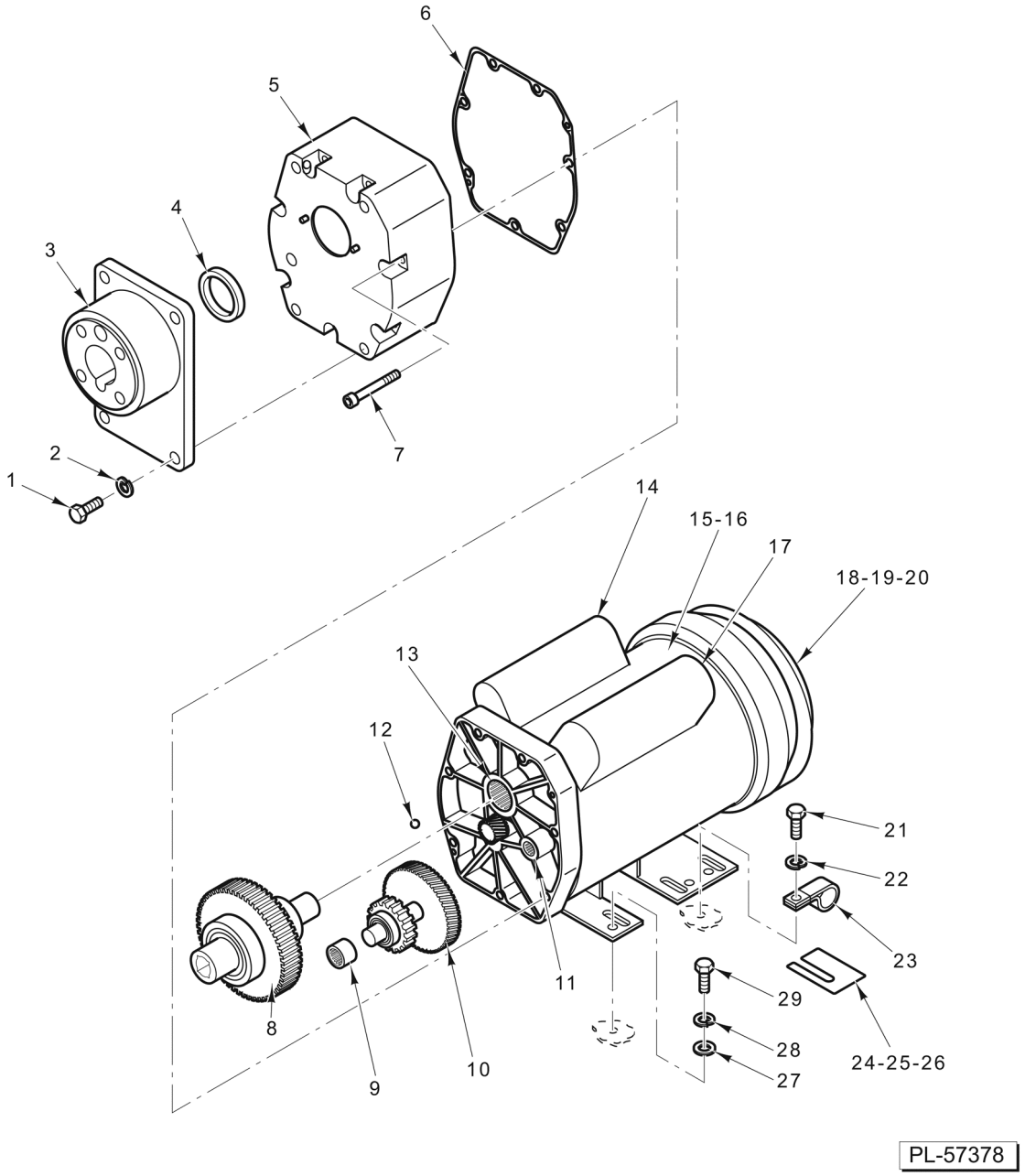

ATTACHMENT HUB AND MOTOR

ATTACHMENT HUB AND MOTOR

ILLUS. PL-57378	PART NO.	NAME OF PART	AMT.
1	SC-037-86	Cap Screw 7/16-14 x 1 Hex Hd	4
2	WL-004-10	Lockwasher 7/16 Helical	4
3	00-914157	Hub - Adapter	1
4	00-914156	Seal	2
5	00-914125	Housing Assy	1
6	00-914131	Gasket	1
7	SC-129-15	Cap Screw 1/4-20 x 2-3/4 Hex Socket Hd	7
8	00-914127	Gear Assy. (Low Speed)	1
9	00-914252	Bearing - Needle	1
10	00-914126	Gear Assy. (High Speed)	1
11	00-914253	Bearing - Needle	1
12	00-914202	Ball - Steel	3
13	00-914254	Bearing - Needle	1
14	00-914278	Capacitor - Start (1 Ph.)	1
15	00-914275	Motor (1 Ph.)	1
16	00-914201	Motor (3 Ph.)	1
17	00-914279	Capacitor - Run (1 Ph.)	1
18	00-914251	Washer - Wavy	1
19	00-914247	Kit - Fan	1
20	00-914249	Switch - Motor Start (1 Ph.)	1
21	SC-027-28	Mach. Screw 8-32 x 3/8 Slotted Rd. Hd. (Brass)	1
22	WL-011-01	Lockwasher #8 Internal Shakeproof	2
23	00-078752-00004	Retainer (7/16 In.)	1
24	00-914128-00001	Shim - Motor (0.005 Thk.)	AR
25	00-914128-00002	Shim - Motor (0.010 Thk.)	AR
26	00-914128-00003	Shim - Motor (0.020 Thk.)	AR
27	WS-029-86	Washer	4
28	WL-003-47	Lockwasher 5/16 Helical	4
29	SC-036-40	Cap Screw 5/16-18 x 1-1/4 Hex Hd	4