INSTRUCTION MANUAL

. . . *with Catalog of Replacement Parts*

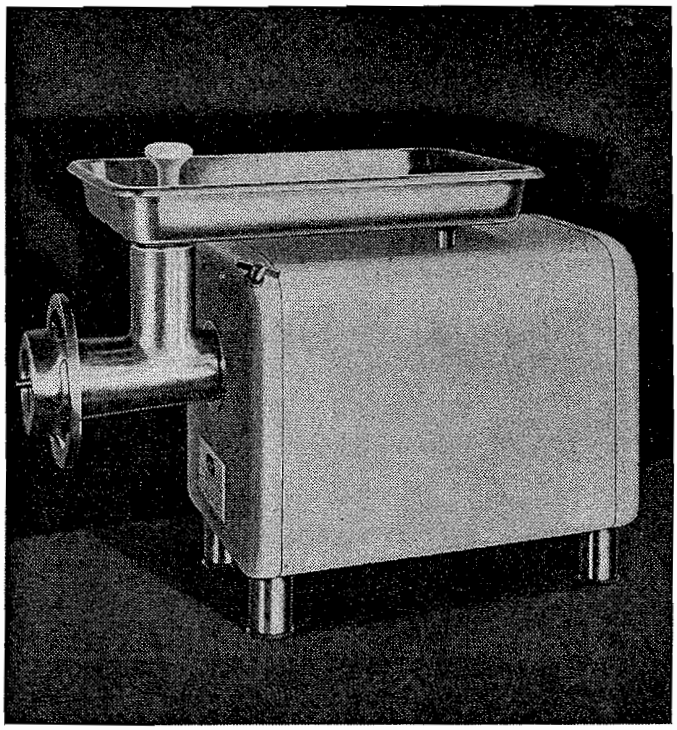

HOBART

MODEL 4822 CHOPPER

Spec. #7972 (CHROME)

THE HOBART MANUFACTURING COMPANY

The World's Oldest and Largest Manufacturer of Computing Scales and Food Store, Kitchen, Bakery and Dishwashing Machines

TROY, OHIO, U.S.A.

FORM 3410-C (Revised June 1963) (Supersedes Form 3410-B, Dec. 1961)

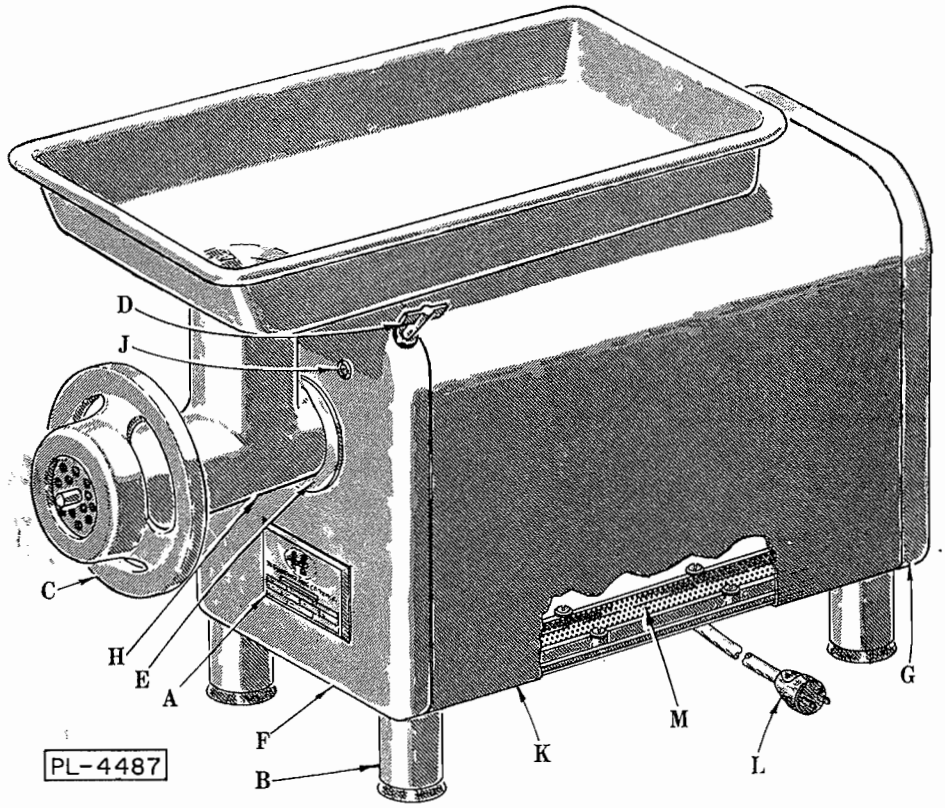

Instructions for Operation and Care of

Model 4822 CHOPPER

INSTALLATION:

Before making electrical connection, CHECK THE SPECIFICATIONS ON THE NAME PLATE (A) TO MAKE SURE THEY AGREE WITH THOSE OF YOUR ELECTRICAL SERVICE.

A cord and plug (L) is furnished as standard equipment on this machine. The base on the under side of the machine is tapped for ½" conduit should a permanent installation be required. Bring the conductors up through this tapped hole and connect directly to the switch on the end of the machine. It is IMPORTANT to use the proper conductor (wire) and fuse sizes. These are listed below and also on the tag attached to the machine.

WIRE AND FUSE SIZES

Volts	Phase	Line Fuse	Wire Size
115	1	40	10
230	1	20	14
208	3	15	14
220	3	15	14

Multiphase motors should be so connected that the attachment runs counterclockwise facing the attachment hub.

The four leg assemblies (B) are removed and packed in the chopper attachment carton before shipment. Reassemble these legs by simply screwing them into the four tapped holes of the base. The rubber feet on these legs cushion the machine. Under normal operation, the machine need not be bolted down.

CARE OF CHOPPER ATTACHMENT:

Before using the chopper attachment, take it apart, and wash thoroughly. When reassembling, apply tasteless oil to the drive shaft and the composition thrust washer of the worm. The knife and plate need some preliminary lubrication; rub tallow over the cutting faces of these parts. When assembling the knife, be sure to turn the cutting side out toward the perforated plate and see that the notch on the circumference of the plate fits over the pin in the bottom of the cylinder.

Do not adjust hand wheel (C) too tight; if the knife and plate are both sharp, only a moderate pressure will be needed. Knives and plates must be sharp and true for proper cutting action. Rub a little tallow over newly-sharpened plates before use. NEVER allow your chopper to run without meat in the chopping end; only a few minutes of such running can ruin a knife and plate.

Wash all parts of the attachment daily, in warm soapsuds.

Take out the entire chopper attachment each time after using, and place it in the refrigerator until it is needed again.

INSERTING CHOPPER ATTACHMENT: Each day, before assembling the chopper attachment, place a drop of tasteless oil into the hole marked "oil" on the hub of the cylinder.

When putting on the chopper attachment, see that both the hub and the socket are clean, and insert with a slight twisting motion toward the left, so that the stop pin in the attachment is in contact with the side of the hole that receives it. Then tighten the thumb screw (D).

To remove the attachment, first turn the thumb screw (D) approximately three revolutions to the left (do not remove the screw), then give the attachment a twist to the right as you pull it out. Never strike the cylinder with an object to loosen it.

HUB DRAIN: A drain hole in the trim washer (E) allows any meat juices to drain from the hub. This hole should be inspected periodically to make sure that it is free of obstructions; a small wire can be used for removing any material which may have accumulated.

LUBRICATION: The gears and bearings are packed with special lubricant sufficient to last several years. To gain access to the drain and grease filling plug, it is necessary to remove the front housing panel (F) (see paragraph on "Panel Removal"). Consult a Hobart service technician before adding grease. Lubrication of the chopper attachment is described under the paragraphs "Care of Chopper Attachment" and "Inserting Chopper Attachment".

CARE OF MOTOR: All single phase motors on this chopper to operate on alternating current are of the capacitor type and do not have brushes.

Direct current motors have commutators and brushes instead of capacitors. Brushes and commutator should be inspected at least once a year by a reliable electrician or a Hobart service technician.

AIR INTAKE: Under normal operating conditions the motor air intake screen (M) (located in the base of the chopper) will need little or no attention. However, in some installations where saw dust or other foreign materials are present in the air, this intake screen may become partially or completely covered and throttle the cooling air to the motor. Where an adverse dust condition does exist, periodically check the screen (using an adequate light) and wipe exposed side of screen clean with a rag or brush as required.

PANEL REMOVAL: To disassemble the front panel (F), remove the thumb screw (D) and the chopper cylinder (H); next, remove the four lower screws on the under side of the base, the two upper screws (J), and the four screws that retain the hub trim washer (E). Lift off the panel.

To take off the rear panel (G), remove the two upper screws and the four lower screws on the under side of the base. Remove the panel, being careful not to damage the switch leads.

To remove the center housing (K), after removing the front and rear panels, as described above, disassemble the eight screws on the under side of the base. Lift off the center housing.

MEAT CHOPPING: Cut the meat into strips and feed it into the chopper, using the meat stomp only as needed. If the strips are cut to proper size, they will feed without assistance from the meat stomp, allowing both hands of the operator free to feed meat. When running meat through the chopper a second time, more speed is attained by feeding small quantities at a time, than by trying to force large amounts with the meat stomp.

The feed pan should always be kept in place. It not only makes regular feeding easy, but by increasing the height of the neck, it holds the operator's hands a safe distance from the revolving worm, and therefore makes the machine safer to use than other choppers. The fineness to which the meat is cut is governed by the size of the holes in the perforated plate, not by the tension put upon the adjusting ring.

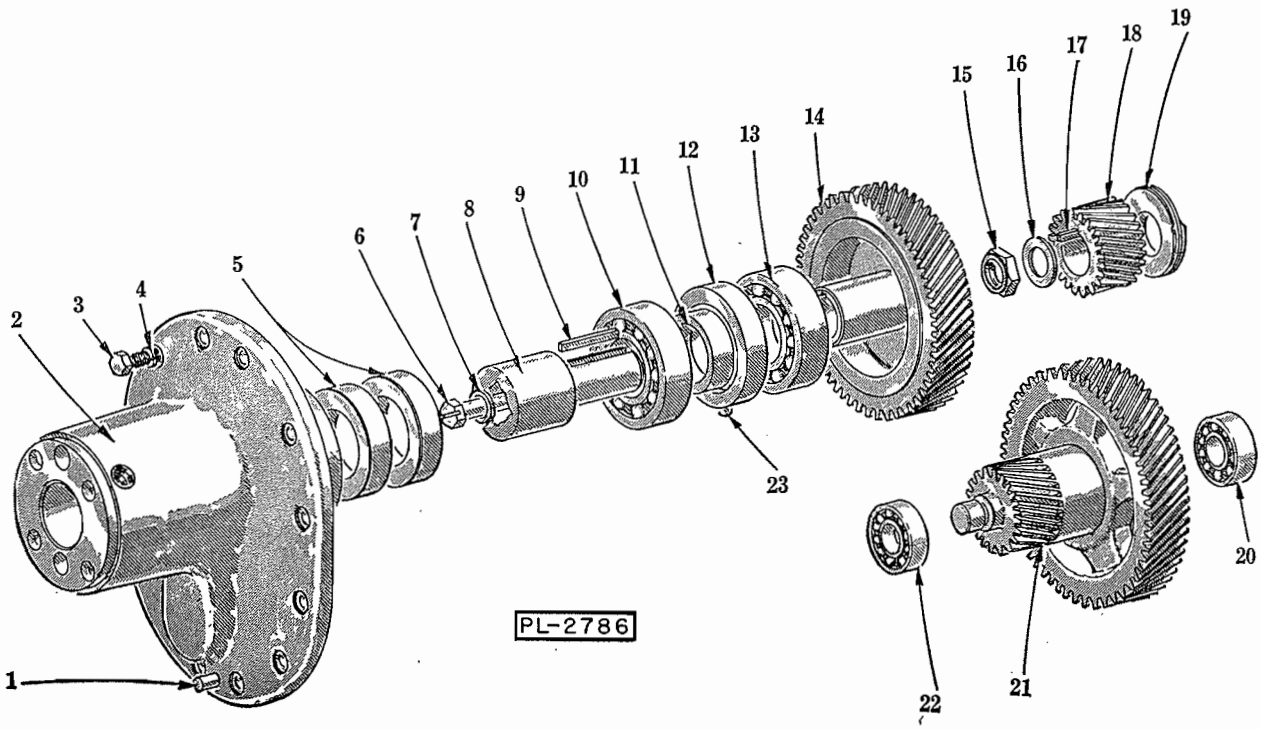

ATTACHMENT HUB AND TRANSMISSION UNIT

ILLUS. PL-2786	PART NO.	NAME OF PART	AMT.
1	P-11800-116	Dowel	1
2	S-64815	Hub - Attachment	1
3	SC-37-75	Fin. Bolt - 5/16"-18 x 3/4" Hex Hd.	12
4	WL-3-44	Lock Washer - 5/16" x .125" x .078"	12
5	M-23618	Seal - Grease	2
6	SC-36-79	Fin. Bolt - 3/8"-24 x 2-3/4" Slotted Hex Hd.	1
7	WL-4-2	Lock Washer - 3/8" x .136" x .070"	1
8	P-15259	Sleeve - Square Drive	1
9	R-12430-68	Key	1
10	BB-6-38	Ball Bearing - N.D. #3207	1
11	V-15261	Collar - Inner Spacing	1
12	M-15260	Collar - Outer Spacing	1
13	BB-6-38	Ball Bearing - N.D. #3207	1
14	P-15325	Hub & Chopper Drive Gear Assy. (58T)	1
15	V-9435	Lock Nut	2
16	WS-11-1	Washer	1
17	R-12430-61	Key	1
18	M-21783	Pinion - Motor (23T)	1
19	M-15247	Deflector - Grease	1
20	BB-5-24	Ball Bearing - N.D. #3203	1
21	P-65128	Main Drive Gear & Co-Shaft Pinion Assy. (67T & 19T)	1
22	BB-5-24	Ball Bearing - N.D. #3203	1
23	V-15262	Pin - Spacer Retaining	1

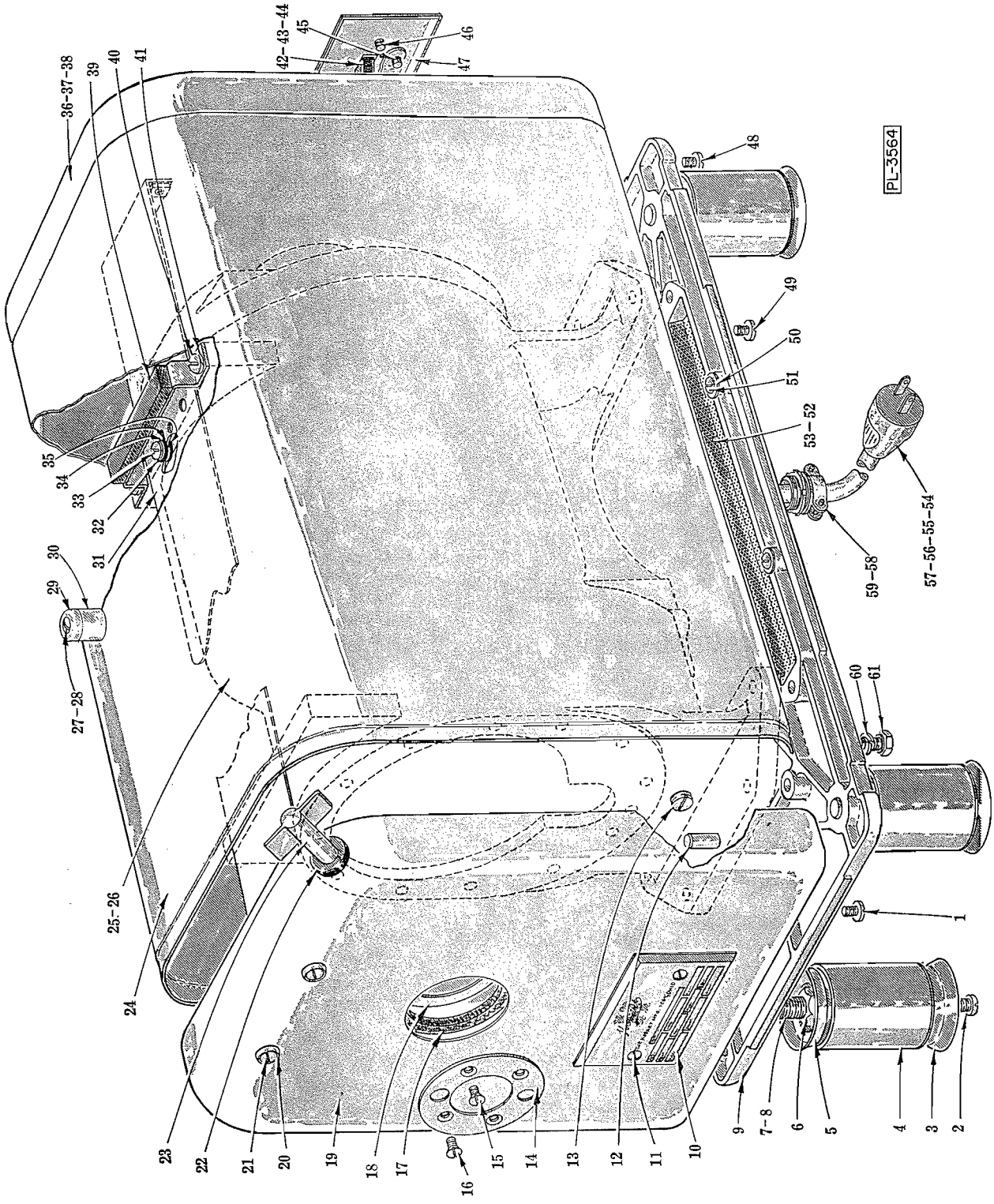

MOTOR AND HOUSING UNIT

MOTOR AND HOUSING UNIT

ILLUS. PL-3564	PART NO.	NAME OF PART	AMT.
1	SC-25-7	Mach. Screw - #10-24 x 5/16" Bind. Hd.	4
2	SC-11-75	Mach. Screw - 1/4"-20 x 5/8" Fil. Hd.	4
3	M-65163	Foot - Rubber	4
4	M-77772	Leg	4
5	M-64814	Cap - Leg End	8
6	NS-17-59	Jam Nut - 1/2"-13 Hex Fin.	4
7	M-77771	Stud - Leg	4
8	M-77770	Leg Sub-Assy. (Incls. items #4, 5, 6 & 7)	4
9	T-65063	Base - Sub	1
10	M-67513	Plate - Name	1
11	SC-15-14	Mach. Screw - #6-32 x 3/8" Oval Hd.	2
12	P-11800-141	Dowel	2
13	V-15250-1	Plug - 1/4" Pipe (Special)	1
14	P-64820	Washer - Trim (Attach. Hub)	1
15	SC-22-16	Mach. Screw - #10-24 x 5/16" Flat Hd.	1
16	SC-22-17	Mach. Screw - #10-24 x 3/8" Flat Hd.	3
17	M-64818	Gasket - Attachment Hub	1
18	M-64819	Washer - Gasket Retaining	1
19	S-64804-5	Panel - Front Housing	1
20	WC-4-10	Csk. Washer - #10	2
21	SC-15-36	Mach. Screw - #10-24 x 5/8" Oval Hd.	2
22	M-64824	Grommet (Thumb Screw)	1
23	P-64825	Thumb Screw Assy.	1
24	T-64798-3	Panel - Center Housing	1
25	--------	Motor (see separate Motor Parts Sheet)	1
26	T-65056	Motor Frame & Gear Case	1
27	SC-9-96	Mach. Screw - #8-32 x 1-1/4" Rd. Hd.	2
28	M-74710	Speed Nut - #8-32	2
29	V-19105-1	Bumper	2
30	M-65999-2	Booster	2
31	R-64808	Bracket - Locating	1
32	WL-3-37	Lock Washer - 1/4" x .109" x .062"	4
33	SC-8-81	Mach. Screw - 1/4"-20 x 1/2" Rd. Hd.	4
34	WS-3-20	Washer	4
35	M-66185	Washer (Rubber)	8
36	S-64805-5	Panel - Rear Housing	1
37	SC-15-36	Mach. Screw - #10-24 x 5/8" Oval Hd.	2
38	WC-4-10	Csk. Washer - #10	2
39	M-65116	Center Panel Brkt. & Compression Strip Sub-Assy.	2
40	SC-8-81	Mach. Screw - 1/4"-20 x 1/2" Rd. Hd.	4
41	WL-3-37	Lock Washer - 1/4" x .109" x .062"	4
42	R-24940-4	Switch (1 Ph.)	1
43	R-24940-2	Switch (3 Ph. under 250 V.)	1
44	SS-3-26	Switch (3 Ph. above 250 V.)	1
45	M-74835	Screw - Switch Mounting	2
46	SC-15-14	Mach. Screw - #6-32 x 3/8" Oval Hd.	2
47	M-67514	Plate - Switch (Use with items #42, 43 & 44)	1
48	SC-25-7	Mach. Screw - #10-24 x 5/16" Bind. Hd.	4
49	SC-25-7	Mach. Screw - #10-24 x 5/16" Bind. Hd.	10
50	WS-2-19	Washer	4
51	SC-60-21	Mach. Screw - #10-24 x 1/4" Rd. Hd.	4
52	P-65144	Screen - Air Inlet	1
53	P-65143	Screen - Air Outlet (Not shown)	1
54	S-63335-2	Cord and Plug (Under 125 V., 2 Conductor) (No Ground)	1
55	S-63335-17	Cord and Plug (200-250 V., 2 Conductor) (No Ground)	1
56	S-63335-28	Cord and Plug (Under 150 V., 3 Conductor) (Ground)	1
57	S-63335-43	Cord and Plug (200-250 V., 3 Conductor) (Ground)	1
58	FE-2-27	Connector - Cord (For items #54 & 56)	1
59	FE-2-45	Connector - Cord (For items #55 & 57)	1
60	WL-3-44	Lock Washer - 5/16" x .125" x .078"	10
61	SC-36-40	Fin. Bolt - 5/16"-18 x 1-1/4" Hex Hd.	10

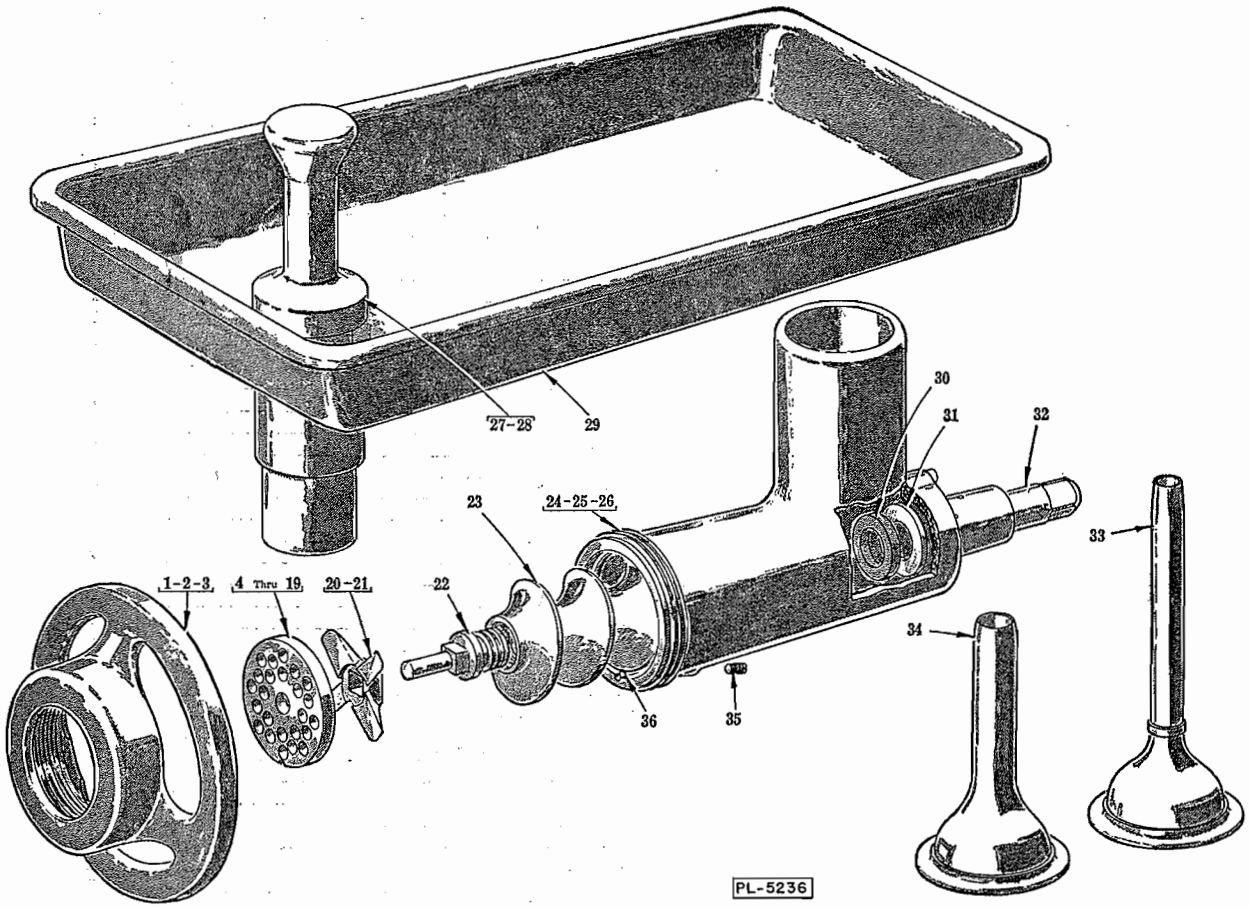

#22 CHOPPER ATTACHMENT UNIT (NSF)

#22 CHOPPER ATTACHMENT UNIT (NSF)

Spec. #9442 & 9443

ILLUS. PL-5236	PART NO.	NAME OF PART	AMT.
1	R-77643-1	Ring - Adjusting (Brite Metal)	1
2	R-77643-2	Ring - Adjusting (Tinned)	1
3	R-77643-3	Ring - Adjusting (Chrome)	1
4	P-16430	Chopper Plate (1/8" Dia. Holes) (Carbon Steel)	1
5	P-16431	Chopper Plate (3/16" Dia. Holes) (Carbon Steel)	1
6	P-16432	Chopper Plate (1/4" Dia. Holes) (Carbon Steel)	1
7	P-16433	Chopper Plate (3/8" Dia. Holes) (Carbon Steel)	1
8	M-16434	Chopper Plate (1/2" Dia. Holes) (Carbon Steel)	1
9	M-16435	Chopper Plate (5/8" Dia. Holes) (Carbon Steel)	1
10	M-16436	Chopper Plate (3/4" Dia. Holes) (Carbon Steel)	1
11	M-16437	Chopper Plate (15/16" Dia. Holes) (Carbon Steel)	1
12	P-17521-3	Chopper Plate (1/8" Dia. Holes) (Stay Sharp)	1
13	P-17521-4	Chopper Plate (3/16" Dia. Holes) (Stay Sharp)	1
14	P-17521-5	Chopper Plate (1/4" Dia. Holes) (Stay Sharp)	1
15	P-17521-6	Chopper Plate (3/8" Dia. Holes) (Stay Sharp)	1
16	P-17521-7	Chopper Plate (1/2" Dia. Holes) (Stay Sharp)	1
17	P-17521-8	Chopper Plate (5/8" Dia. Holes) (Stay Sharp)	1
18	P-17521-9	Chopper Plate (3/4" Dia. Holes) (Stay Sharp)	1
19	P-17521-10	Chopper Plate (15/16" Dia. Holes) (Stay Sharp)	1
20	P-16409	Knife - Chopper (Carbon Steel)	1
21	P-60392	Knife - Chopper (Stay Sharp)	1
22	M-15880	Stud - Plate	1
23	M-15881	Worm Assy. (Incls. items #22, 30 & 32)	1
24	M-77711	Chopper Cylinder Assy. Unit (Brite Metal) (Incls. items #31, 35 & 36)	1
25	M-77710-1	Chopper Cylinder Assy. Unit (Tinned) (Incls. items #31, 35 & 36)	1
26	M-77710-2	Chopper Cylinder Assy. Unit (Chrome) (Incls. items #31, 35 & 36)	1
27	P-23150	Stomp - Meat (C. Alum.)	1
28	R-78925-1	Stomp - Meat (Plastic)	1
29	S-65156-2	Pan - Feed	1
30	V-4221	Washer - Worm Thrust	1
31	V-4839-1	Washer - Cylinder Thrust	1
32	M-7201	Stud - Sq. Drive	1
33	P-5193	Stuffer - Sausage (Sheep Casing)	1
34	M-5175	Stuffer - Sausage (Hog Casing)	1
35	V-4313	Screw - Plate Pin Retaining	1
36	V-4036	Pin - Plate	1

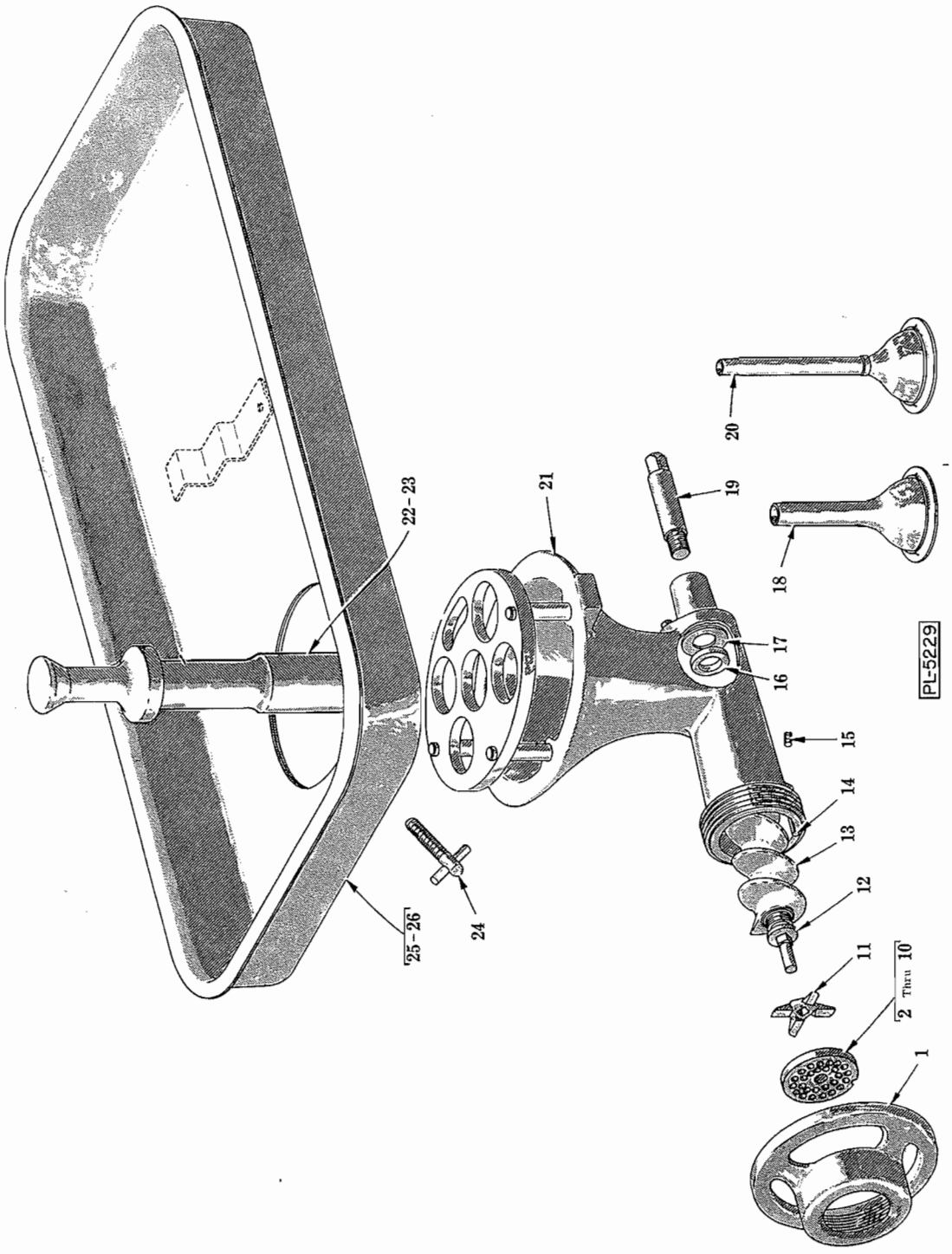

#22-FS CHOPPER ATTACHMENT UNIT (NSF)

#22-FS CHOPPER ATTACHMENT UNIT (NSF)

Spec. #9444

ILLUS. PL-5229	PART NO.	NAME OF PART	AMT.
1	R-77643-2	Ring - Adjusting	1
2	M-7215	Chopper Plate (5/64" Dia. Holes) (Carbon Steel)	1
3	P-16430	Chopper Plate (1/8" Dia. Holes) (Carbon Steel)	1
4	P-16431	Chopper Plate (3/16" Dia. Holes) (Carbon Steel)	1
5	P-16432	Chopper Plate (1/4" Dia. Holes) (Carbon Steel)	1
6	P-16433	Chopper Plate (3/8" Dia. Holes) (Carbon Steel)	1
7	M-16434	Chopper Plate (1/2" Dia. Holes) (Carbon Steel)	1
8	M-16435	Chopper Plate (5/8" Dia. Holes) (Carbon Steel)	1
9	M-16436	Chopper Plate (3/4" Dia. Holes) (Carbon Steel)	1
10	M-16437	Chopper Plate (15/16" Dia. Holes) (Carbon Steel)	1
11	P-16409	Knife - Chopper	1
12	M-15880	Stud - Plate	1
13	P-68338	Worm Assy. (Incls. items #12, 16 & 19)	1
14	V-4036	Pin - Plate	1
15	V-4313	Screw - Plate Pin Retaining	1
16	V-4221	Washer - Worm Thrust	1
17	V-4839-1	Washer - Cylinder Thrust	1
18	M-5175	Stuffer - Sausage (Hog Casing)	1
19	M-7201	Stud - Square Drive	1
20	P-5193	Stuffer - Sausage (Sheep Casing)	1
21	R-77719	Chopper Cylinder and Guard Assy. (Guard 1-3/4" High) (Incls. items #14, 15 & 17)	1
22	R-62341-2	Stomp - Meat (C. Alum.)	1
23	R-78925-11	Stomp - Meat (Plastic)	1
24	M-22306	Clamp Screw Assy.	1
25	R-67930-1	Feed Pan Assy. (Incls. item #24) (STL)	1
26	R-67930-2	Feed Pan Assy. (Incls. item #24) (SST)	1

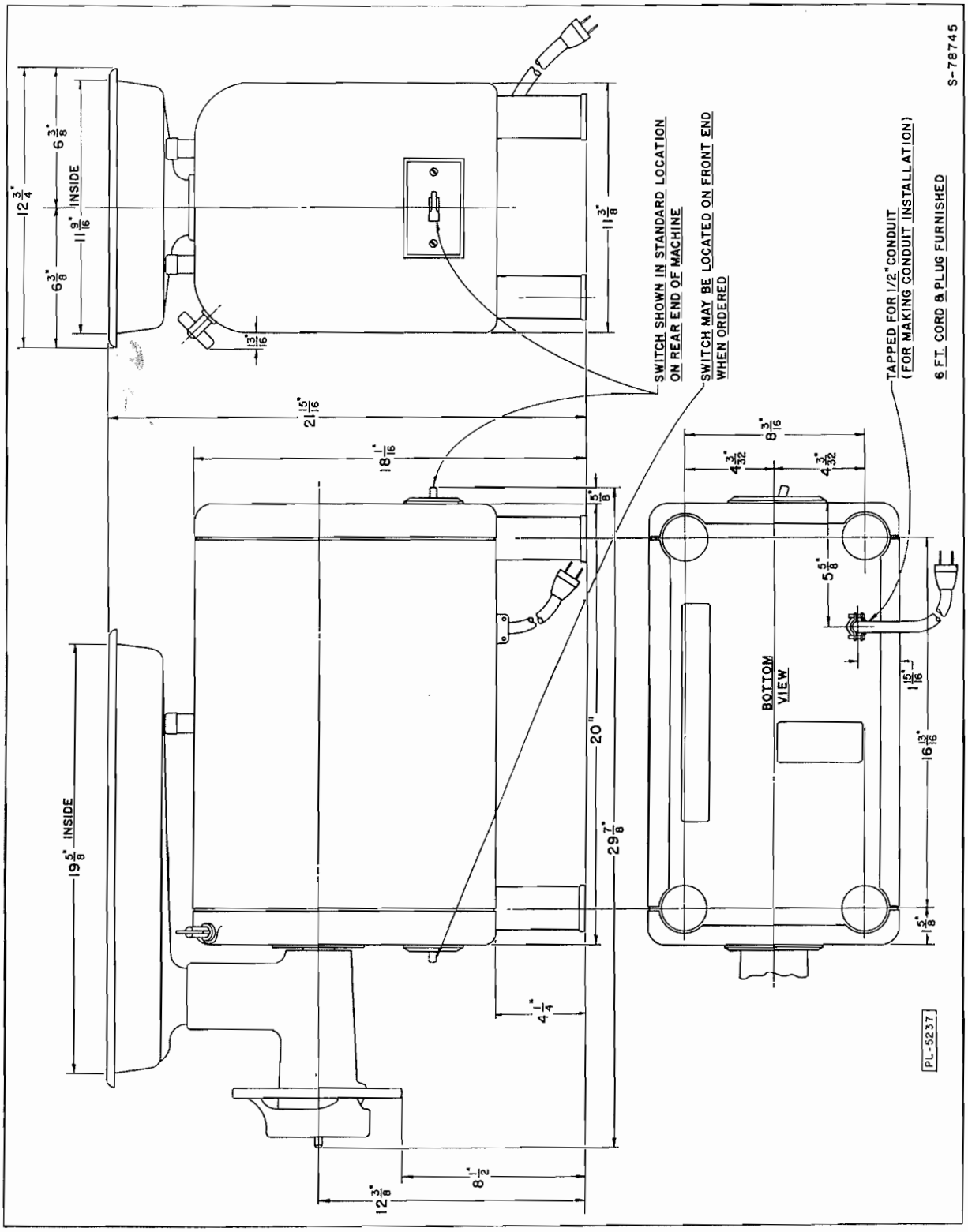

INSTALLATION DIAGRAM