INSTRUCTIONS

MEAT SAWS

MODEL 5614 MEAT SAW

MODEL

5614 ML-19553 (Starting Serial Number 27-128-712)

HOBART
CORPORATION

EXECUTIVE OFFICES
701 RIDGE AVENUE
TROY, OHIO 45374-0001

FORM 16992 Rev. A (11-95)

Installation, Operation, and Care of

MODEL 5614 MEAT SAW

SAVE THESE INSTRUCTIONS

GENERAL

The Model 5614 Meat Saw is rugged, durable, and easy to clean. The carriage has stainless steel ball bearings providing easy travel and dependability. The shaped front edge of the carriage is comfortable to the operator's body even when leaned on during movement. The carriage lock is standard. Table, carriage, pulleys, guides, and wiper assemblies can be quickly removed without tools for ease of cleaning.

Moving parts are enclosed but accessible. The blade is guarded above and below the cutting zone. The pusher plate is provided to eliminate the need of handling items close to the blade; it can ride on the right "flanged-end" of the carriage (Fig. 2) so you keep your hands away from the cutting edge of the blade.

The 5614 meat saw has a 2 HP motor controlled by a push-pull switch actuator knob located on the front of the saw. For electrical specifications above 250 volts, a transformer provides a 115 volt control circuit voltage (optional on lower voltages). Thermal overload protection is an option.

One long-life blade is furnished with each saw as standard equipment. This blade cannot be resharpened; replacement blades are available through your local Hobart Service Office.

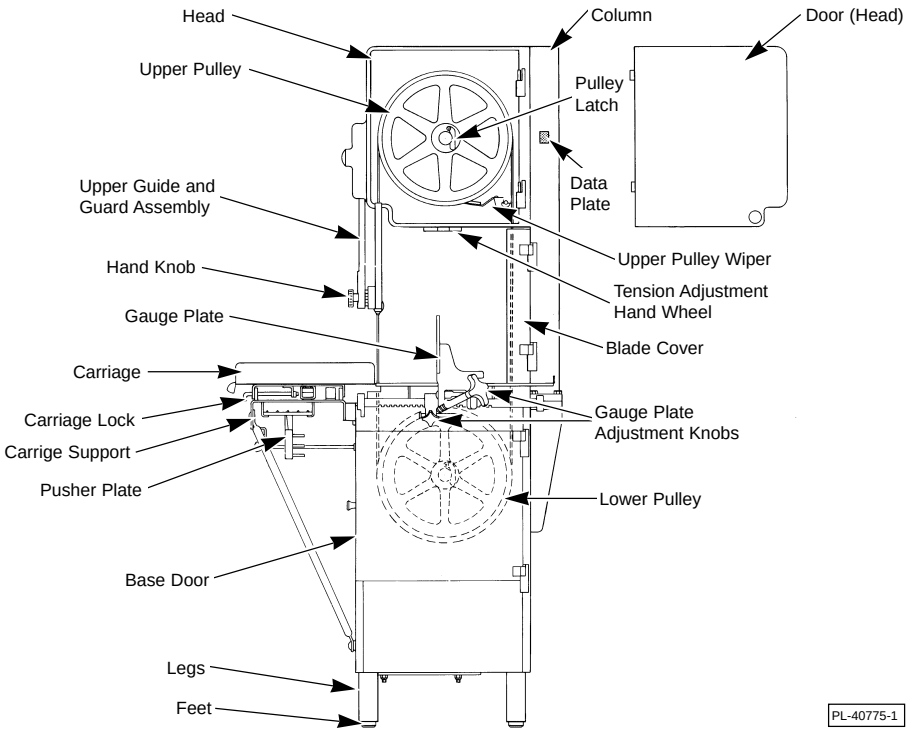

Fig. 1

INSTALLATION

UNPACKING AND ASSEMBLY

Immediately after unpacking the meat saw, check for possible shipping damage. If the meat saw is found to be damaged, save the packaging material and contact the carrier within 15 days of delivery.

Prior to installation, test the electrical service to make sure it agrees with the specifications on the machine data plate located on the column.

Packed in the scrap pan in the base compartment are the pusher plate, the upper pulley wiper, and the feet and set screws. Place the pusher plate in its storage location under the carriage (Fig. 1). Open the door (head) and assemble the upper pulley wiper: Pull down on the spring-loaded wiper and slide it onto the pins (Fig. 1). Remove the four shipping bolts from the underside of the skid. Apply Lubriplate 630AA grease (supplied) to the threaded studs of the four feet and assemble them to the legs (Fig. 1); tilt to one side and install 2 feet, then tilt the other way and install the 2 remaining feet.

LEVELING

Place the saw in its operating location. Using a spirit level, level the meat saw front-to-back and side-to-side by turning the feet in or out. Lock feet in place using set screws furnished.

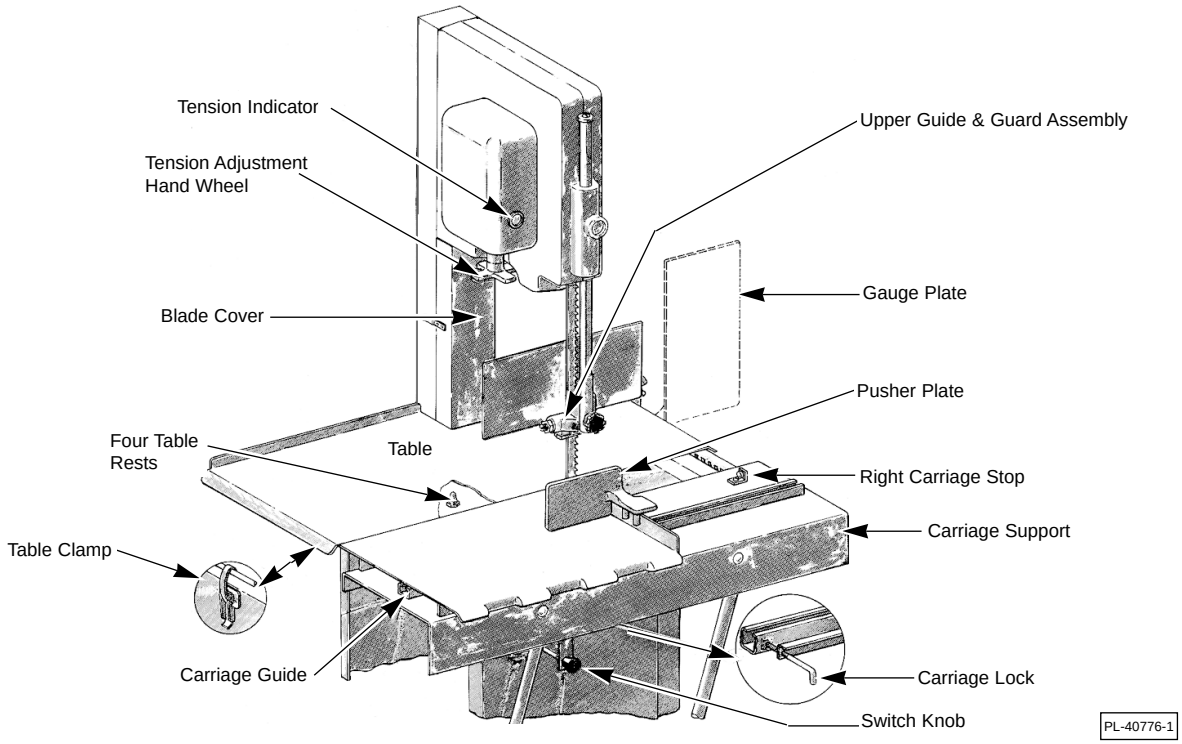

Fig. 2

WARNING: DISCONNECT ELECTRICAL POWER AND PLACE A TAG AT THE DISCONNECT SWITCH INDICATING THAT YOU ARE WORKING ON THE CIRCUIT.

SAW BLADE

The saw blade must be installed so the teeth point to the right and down (Fig. 3).

UPPER GUIDE AND GUARD ASSEMBLY

When the saw is off, the hand knob (Fig. 3) can be used to raise or lower the upper guide and guard assembly so the cutting zone is only as high as necessary for the piece being cut. The hand knob is not loosened during raising or lowering — it should remain tightly secure.

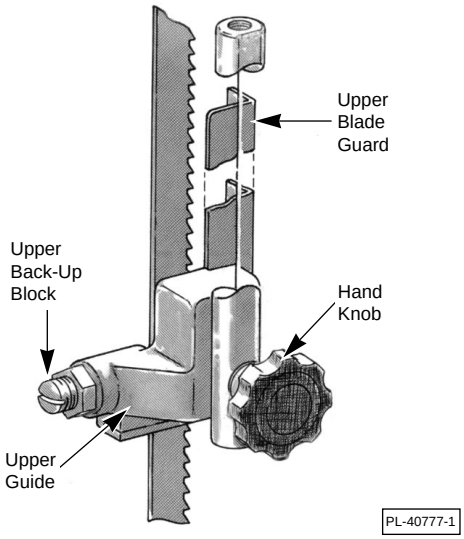

Fig. 3

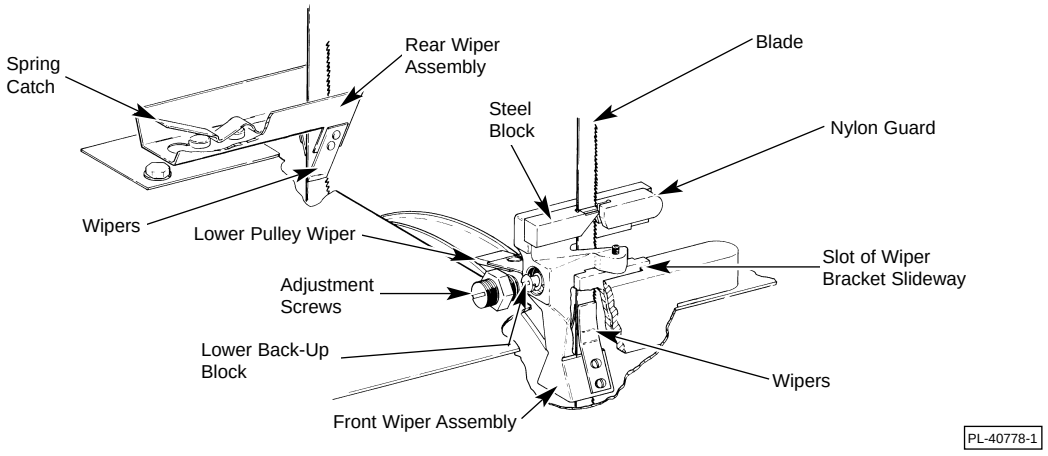

Fig. 4

UPPER PULLEY WIPER

The upper pulley wiper fits on the pins in the head (Fig. 1), wiping the upper pulley during use.

REAR WIPER ASSEMBLY

The rear wiper assembly fits around both sides of the blade and is held by the slots, studs, and spring catch (Fig. 4).

FRONT WIPER AND GUIDE ASSEMBLY

The front wiper and guide assembly fits in the slot of the wiper bracket slideway (Fig. 4). The blade fits in the slots of both the steel guide and the nylon guard. Wipers fit on both sides of the blade. This assembly includes a wiper for wiping the lower pulley during use.

BLADE COVER

The blade cover should be installed on the two hinge pins and closed during saw use. To remove the blade cover, release the spring clip, rotate the blade cover to the open position (Fig. 5), and lift straight up off the hinge pins.

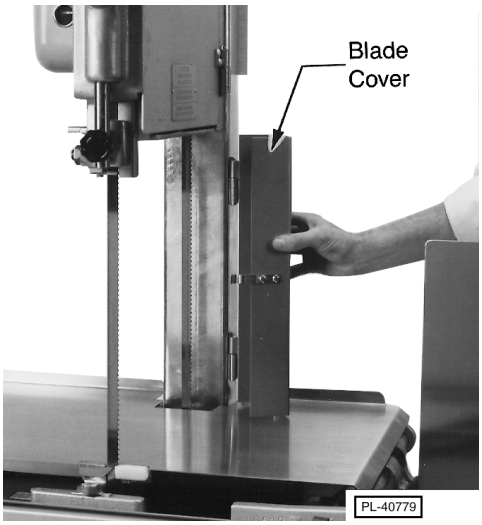

Fig. 5

TABLE

In use, the table is tightly secured as follows: The right table support rod must be hooked against the stationary clamp under the right side of the table and the table clamp (Fig. 2) must be latched, tightly holding down the left table support rod.

To remove the table, raise the gauge plate to its vertical position (Fig. 2). Release the table clamp on the left side. Shift the table to the right, freeing the right support rod from the stationary clamp. Lift table to remove.

To reinstall the table, place it on the base and slide it to the right. Then slide the table back to the left so the right support rod is hooked by the stationary clamp. Four table rests (Fig. 2) support and align the table underneath. When the table is in proper position, latch the table clamp about the left support rod (Fig. 2).

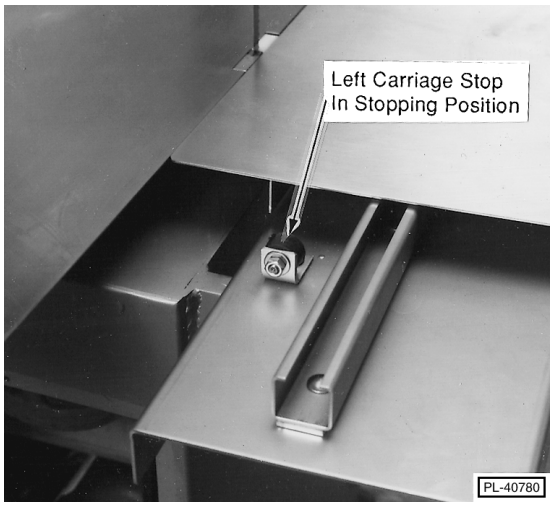

Fig. 6

CARRIAGE

In use, the carriage can roll back and forth between the carriage stops (Figs. 2 & 6) if the spring loaded carriage lock (Fig. 2) has not locked the carriage in a stationary position.

To remove the carriage, turn either of the carriage stops 90 degrees so the bumper is toward the rear (Fig. 7). Roll the carriage off either end while lifting it free of the carriage guide (Fig. 7).

During blade change, the carriage can be moved left of the nylon guard on the wiper assembly without completely removing the carriage from the saw. Turn the left carriage stop 90 degrees (Fig. 7). Roll the carriage just to the left of the nylon guard. After blade change, roll carriage back to the right. Return the left carriage stop to the stopping position (Fig. 6).

To reinstall the carriage, hold the carriage so the center bearings (underneath) are aligned with the carriage guide. Roll the carriage into place. Return the carriage stops (Figs. 2 & 6) so the carriage is stopped at both ends.

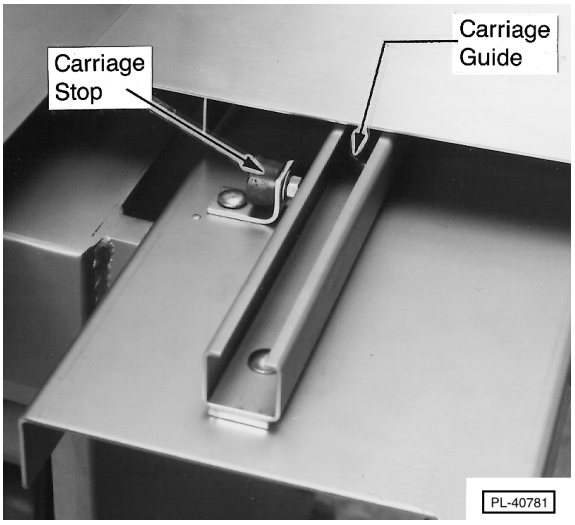

Fig. 7

REMOVING THE BLADE

To remove the blade, raise the gauge plate to its vertical position (Fig. 2); disassemble the blade cover and table; turn the left carriage stop 90° (Fig. 7); and move the carriage to the left so the blade can be removed and reinstalled. Turn the tension adjustment handwheel (Fig. 8) to the left to lower the upper pulley (release tension on blade). Open the door (head). Swing up nylon guard on front wiper and guide assembly (Fig. 4) and remove the saw blade. Lower the upper guide and guard assembly to its lowest position. Reinstall the blade so the teeth point to the right and down (Fig. 3). Adjust the blade tension to its proper setting (see BLADE TENSION ADJUSTMENT, below). Check the blade back-up blocks (see ADJUSTING THE BLADE BACK-UP BLOCKS, below). Reinstall the table; return carriage stop to stopping position; and replace blade cover to its closed position (Fig. 2).

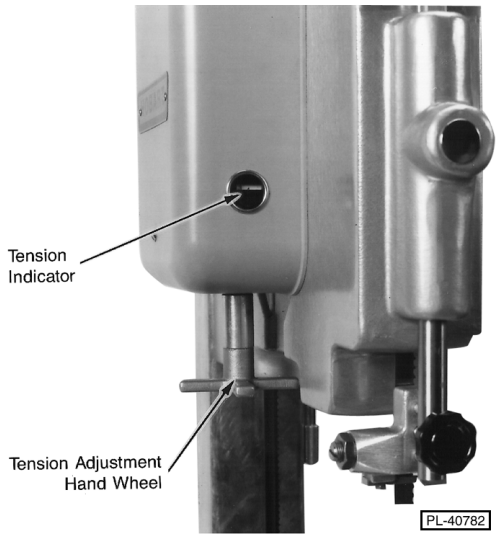

Fig. 8

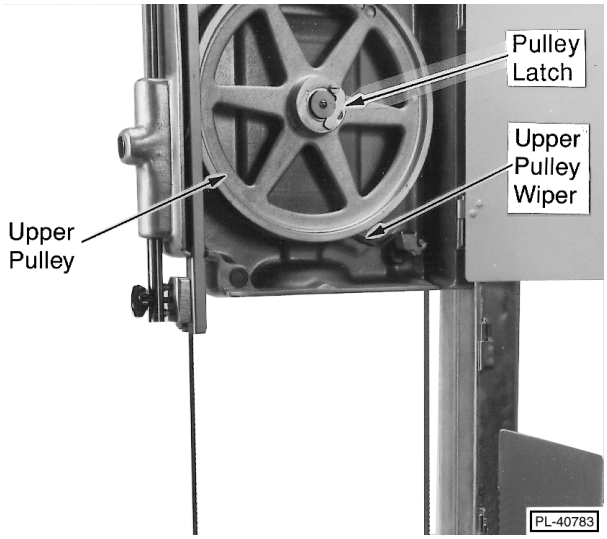

Fig. 9

UPPER AND LOWER PULLEYS

The upper and lower pulleys are assembled on the upper and lower pulley shafts; the latch on each pulley should be seated in the groove of the pulley shaft (Fig. 9). Pulleys can be removed after the blade has first been loosened and removed. Upper and lower pulleys are interchangeable.

BLADE TENSION ADJUSTMENT

With the blade installed, turn the tension adjustment hand wheel to the right until the figure **3** starts to show in the tension indicator (Fig. 8). Rotate the upper pulley a few turns by hand until the blade centers itself on the pulleys. Then turn the tension adjustment hand wheel slowly to the right until the indicator registers between **4** and **5** at eye level. This is the best operating tension for the blade.

ADJUSTING THE BLADE BACK-UP BLOCKS

The upper and lower back-up blocks support the back edge of the blade during sawing. The upper back-up block is located in the upper guide and guard assembly (Fig. 3); and, the lower back-up block is located just below the steel block on the front wiper and guide assembly (Fig. 4). Clearance between back-up blocks and blade should be approximately $^{1}/_{32}$". Adjust to this dimension by turning adjustment screw(s) after changing saw blades; blade widths may vary (see BLADE GUIDE, page 7).

BLADE GUIDE

The blade guide in the front wiper and guide assembly is available in additional sizes if using other than the standard .020" wide blade. Contact Service to change the blade guide for other blade widths.

ELECTRICAL CONNECTION

WARNING: ELECTRICAL AND GROUNDING CONNECTIONS MUST COMPLY WITH THE APPLICABLE PORTIONS OF THE NATIONAL ELECTRICAL CODE AND/OR OTHER LOCAL ELECTRICAL CODES.

WARNING: DISCONNECT ELECTRICAL POWER SUPPLY AND PLACE A TAG AT THE DISCONNECT SWITCH INDICATING THAT THE CIRCUIT IS BEING WORKED ON.

ELECTRICAL DATA

Model	Volts / Hertz / Phase	Fuse		Circuit Breaker	
		Minimum Circuit Ampacity AMPS	Maximum Fuse Size AMPS	Minimum Circuit Ampacity AMPS	Maximum Circuit Breaker Size AMPS
5614	115 / 60 / 1	40	40	40	40
	200 - 230 / 60 / 1	25	25	30	30
	200 - 230 / 60 / 3	15	15	20	20
	460 / 60 / 3	15	6	15	10

Compiled in accordance with the National Electrical Code, ANSI / NFPA 70, 1993 Edition.

Remove the motor access panel on the left side of the meat saw (14 screws).

A $1\frac{3}{32}$" diameter hole for $\frac{3}{4}$" trade size conduit is located in the lower area of the base. Use watertight connections. Refer to Electrical Data, the machine data plate (Fig. 1), and the wiring diagram located inside the motor access panel when making the electrical connection. Use copper wire rated at least 75°C for the connection.

CHECK MOTOR ROTATION (Three-Phase Machines)

If the motor does not rotate so the teeth of the saw blade run downward as you look at the cutting zone, correct the rotation using the following procedure:

WARNING: DISCONNECT ELECTRICAL POWER SUPPLY AND PLACE A TAG AT THE DISCONNECT SWITCH INDICATING THAT YOU ARE WORKING ON THE CIRCUIT.

Interchange any two of the incoming power supply leads. Reconnect the power supply and turn the saw momentarily on and off to verify correct rotation.

Replace the motor access panel (14 screws).

CONTROL BOX HEATER

The meat saw has a heater in the control box to keep the controls dry. The heater is automatically ON when the machine is electrically connected. The meat saw should be connected to the power supply EXCEPT when performing assembly, disassembly, cleaning, or maintenance on the saw.

OPERATION

SAFETY DEVICES INCORPORATED IN THIS SAW MUST BE IN THEIR CORRECT OPERATING POSITIONS ANYTIME THE SAW IS IN USE.

SAFETY FEATURES

Upper Guide and Guard Assembly

Before turning the saw on, raise or lower the upper guide and guard assembly by grasping the hand knob and sliding up or down so the cutting zone is only as high as necessary for the piece being cut.

Doors, Covers, and Guards

All doors, covers, and guards must be in their operating position (closed) while the machine is running.

Pusher Plate

Use the pusher plate as described (page 9) and it will be unnecessary to hold your hand near the cutting edge of the saw blade.

CONTROLS

Switch Knob Pull turns the saw On. Push turns the saw Off.

SAWING

Place product on carriage. Set the upper guide and guard assembly and the gauge plate before starting the machine.

If using the traveling carriage . . .

Stand in front of machine. Lean lightly against the front of the carriage as you move the carriage to the left, passing the product through the blade at a steady and uniform rate.

Use your left hand to remove and stack cuts, always reaching behind the blade. NEVER REACH IN FRONT OF THE BLADE. Return the carriage to the right, pulling the product toward you and away from the blade.

If using the stationary carriage . . .

The carriage may be locked in a stationary position by pulling the spring loaded carriage lock out, rotating it 90° and sliding the carriage until the lock engages (Fig. 10). To unlock the carriage, pull the carriage lock out and rotate it 90° so it rests on its bracket. When sawing with stationary table, observe the same safety procedure of reaching to the left (or back) of the blade when removing or stacking product. NEVER REACH IN FRONT OF THE BLADE.

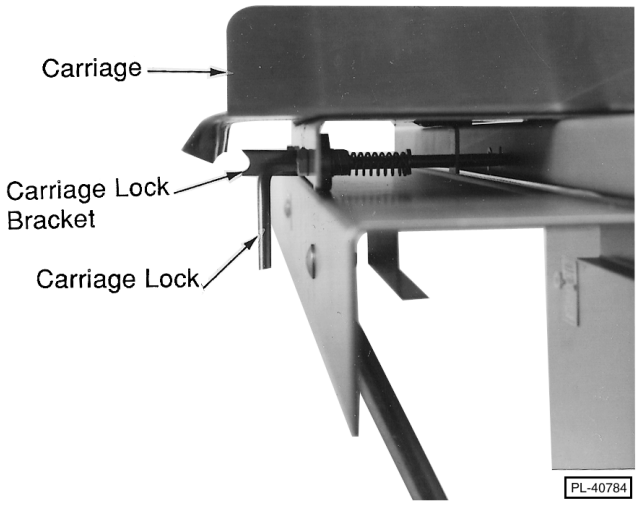

Fig.10

GAUGE PLATE

When making several cuts of the same thickness, set the gauge plate (Fig. 11) by turning the adjusting knob. A reference scale on the table indicates thickness of cut. If the gauge plate is not needed, you may lift the adjusting knob, disengaging the rack teeth, and slide it to the rear; or raise the gauge plate to a vertical position and slide it out of the way.

The adjustable gauging pin (Fig. 11) permits you to slide the gauge plate out of the way and then back to the original position at a later time. To set the pin, adjust the gauge plate to the desired position. Loosen the gauging pin hand knob (Fig. 11) and slide the pin against the gauge plate support stop. Tighten the gauging pin hand knob.

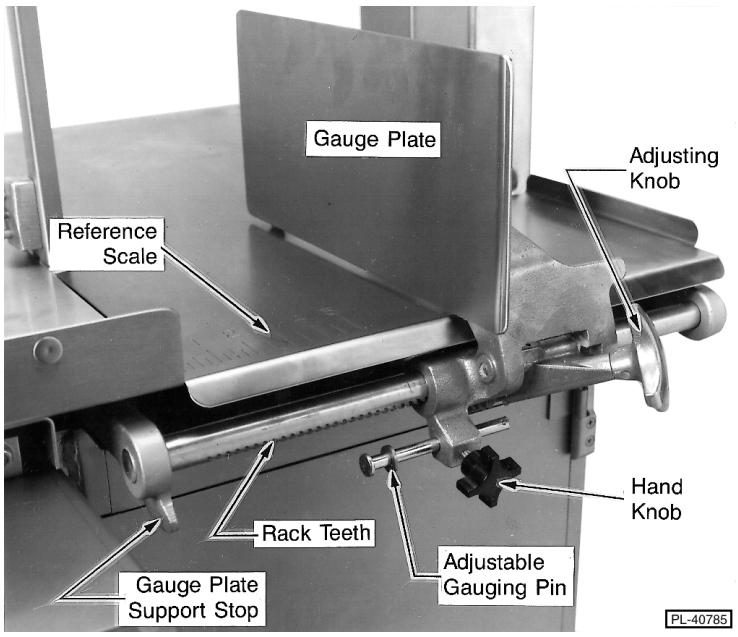

Fig. 11

PUSHER PLATE

The pusher plate is used to hold meat against the gauge plate when slicing short ends. A slot in the pusher plate and a stop on the right "flanged-end" of the carriage is provided for proper positioning of the pusher plate (Fig. 2). Hold the pusher plate handle with your right hand and always maintain a safe distance from the blade. When not in use, keep the pusher plate under the carriage support (Fig.1).

CLEANING AND SANITIZING

WARNING: DISCONNECT ELECTRICAL POWER AND PLACE A TAG AT THE DISCONNECT SWITCH INDICATING THE CIRCUIT IS BEING WORKED ON BEFORE CLEANING THIS MACHINE.

The saw must be thoroughly cleaned and sanitized:

Before first use;

After each day's operation;

Anytime it is not to be used for an extended period of time; or

Before being put into operation after an extended downtime.

The meat saw can be cleaned with high-pressure cleaning equipment (available from other suppliers) or it can be disassembled and its components cleaned in a sink. In either case, a neutral pH cleaning agent mixed per the supplier's instructions should be used. After washing, thoroughly sanitize, rinse, and dry the saw and all components.

Disassemble the following saw components to allow access to all areas for cleaning . . .

Carriage
Blade Cover
Stainless Steel Table
Doors (Head and Base)
Upper Pulley Wiper
Front Wiper and Guide Assembly
Rear Wiper Assembly
Saw Blade
Upper Guide and Guard Assembly (unscrew Hand Knob to disassemble)
Upper and Lower Pulleys

If using High-Pressure Cleaning Equipment . . .

Scrape the machine and its components to remove any scrap particles before cleaning.

Thoroughly hose the saw and its components following the equipment supplier's instructions. Be sure to get the hose stream into all corners. Stubborn soil may require a little brushing.

If using Sink Cleaning . . .

Use a cloth or brush on base unit. Thoroughly wash, sanitize, rinse, and dry.

Before reassembly, a light coating of tasteless mineral oil should be applied to all metal surfaces. Lubricate six ball bearings on the carriage with a small amount of mineral oil. Apply a few drops of mineral oil to the gauge plate rack and work the gauge plate assembly back and forth a few times.

Reassemble the saw components in reverse order of disassembly making sure all parts are properly assembled.

MAINTENANCE

WARNING: DISCONNECT ELECTRICAL POWER AND PLACE A TAG AT THE DISCONNECT SWITCH INDICATING THAT YOU ARE WORKING ON THE CIRCUIT BEFORE BEGINNING ANY MAINTENANCE PROCEDURE.

LUBRICATION

The motor has permanently lubricated ball bearings and requires no additional lubrication.

CHANGING SAW BLADES

If changing saw blades, disassemble components as described in REMOVING THE BLADE, page 6, and the instructions for any component throughout the manual. Make sure wipers and all other components are properly reassembled. Refer to BLADE TENSION ADJUSTMENT and ADJUSTING THE BLADE BACK-UP BLOCKS, page 6. Refer to BLADE GUIDE, page 7.

SERVICE

Contact your local Hobart Service Office for any repairs or adjustments needed on this equipment.