HOBART

INSTRUCTION MANUAL

... with Replacement Parts

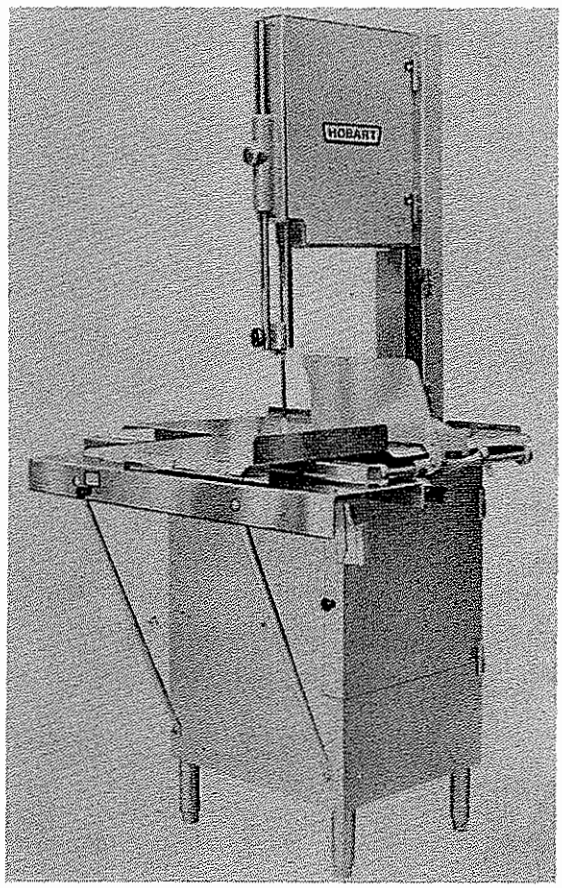

MODELS 5614 SERIES MEAT SAWS

ML-18525	5614	(PAINTED)
ML-18526	5614TN	(TINNED)
ML-18527	5614D	(SST)
ML-18530	5614-HS	(PAINTED)
ML-18531	5614TN-HS	(TINNED)
ML-18532	5614D-HS	(SST)

A product of HOBART CORPORATION TROY, OHIO 45374

FORM 12150B (Rev. 9-78) (Supsds. F. 12150A, 12-76)

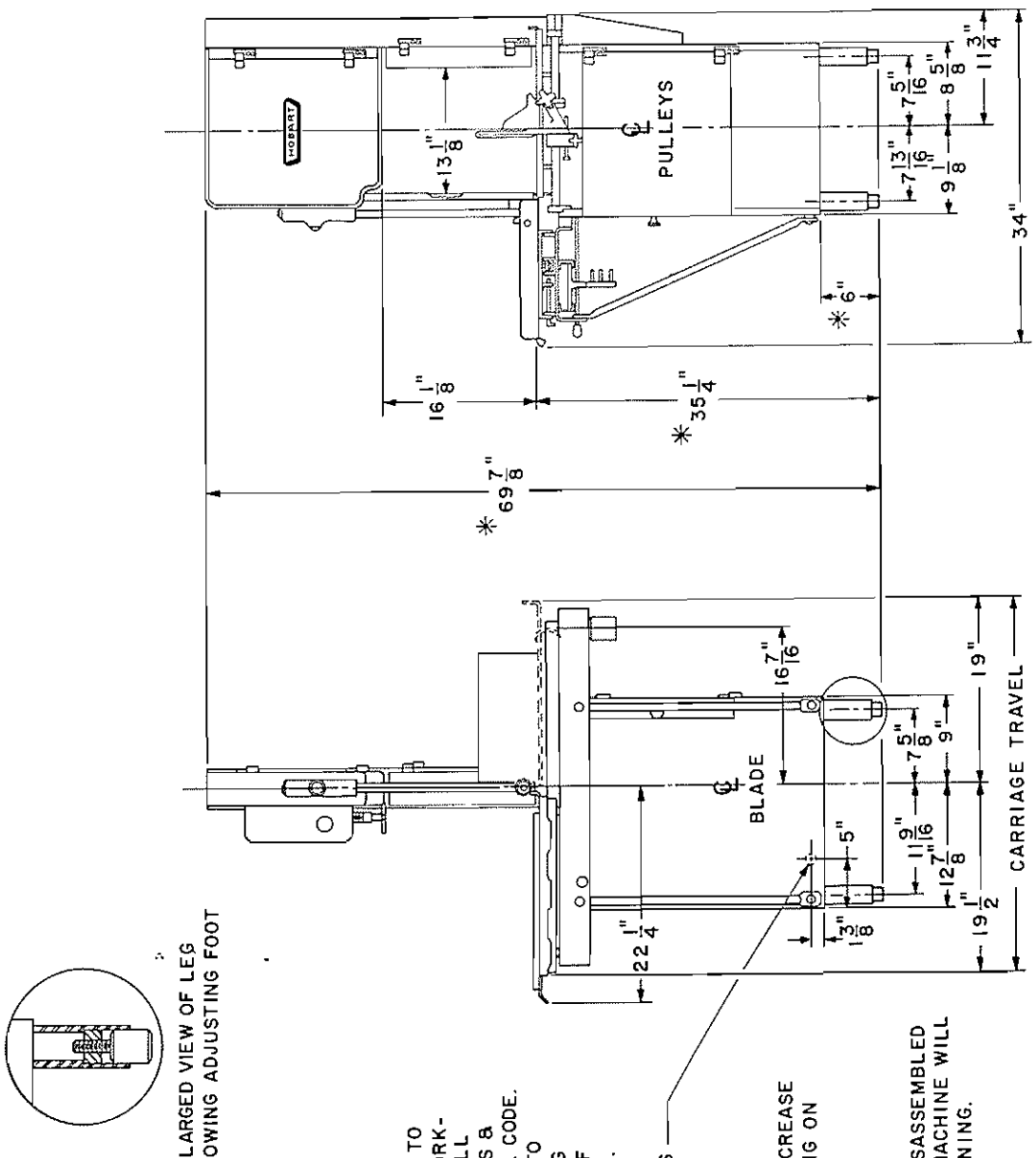

ENLARGED VIEW OF LEG SHOWING ADJUSTING FOOT

ELECTRICAL CONNECTIONS TO BE MADE BY QUALIFIED WORKMAN WHO WILL OBSERVE ALL APPLICABLE SAFETY CODES & THE NATIONAL ELECTRICAL CODE. CONNECTION OF CONDUIT TO BASE MUST BE MADE USING A WATERPROOF FITTING OF PROPER SIZE AND DESIGN.

1-1/16" DIA. HOLE LOCATED AS SHOWN IN BACK OF BASE FOR CABLE OUTLET.

* THESE DIMENSIONS MAY INCREASE AS MUCH AS 1/2" DEPENDING ON LEG ADJUSTMENT.

MACHINE IS PARTIALLY DISASSEMBLED FOR SHIPMENT. CRATED MACHINE WILL PASS THRU A 32-1/2" OPENING.

NET WEIGHT OF MACHINE
DOMESTIC SHIPPING WT.
EXPORT SHIPPING WT.

INSTALLATION DIAGRAM

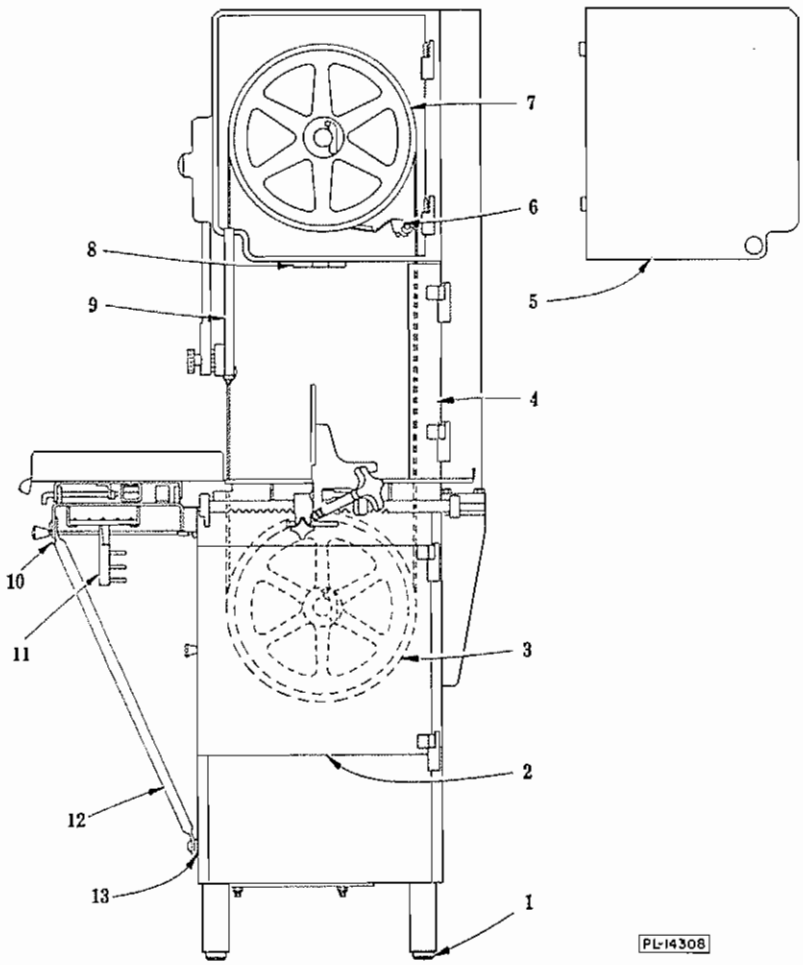

Fig. 1

Installation, Operation and Care of MODELS 5614 SERIES MEAT SAWS

A. UNPACKING:

A.1 Remove the shipping box that covers the saw. The following parts (which were disassembled for shipping purposes) should now be unpacked: table assembly, carriage assembly, carriage support assembly, saw blade, front wiper assembly, rear wiper assembly, switch push rod and feet. The pusher plate is packed in the scrap pan in the base compartment. Remove the four retaining bolts from the underside of the skid.

B. SETTING UP (Installation):

B.1 Place the machine in its operating location and reassemble the feet (1, Fig. 1). Place a spirit level on top of the base unit and level the base, side to side and front to back, by adjusting the feet. Lock feet in place, using set screws furnished.

B.2 Disassemble the fourteen retaining screws and remove the motor access panel on the left hand side of machine. Then using the dowels as locators, bolt the carriage support (10, Fig. 1) to the base. Next assemble the two support braces (12, Fig. 1). Spacers (13, Fig. 1) are used on the lower carriage bolts, and nuts (with lock washers) are assembled on the inside of the base.

B.3 Give the tension adjustment hand wheel (8, Fig. 1) a few turns to the left to lower the upper blade pulley (7, Fig. 1). Open the head door (5, Fig. 1). Remove the blade cover assembly (4, Fig. 1). Raise gauge plate (1, Fig. 4) to its vertical position. Lower the upper guide unit (Fig. 2) to its lowest position.

Place the saw blade over the upper blade pulley (7, Fig. 1) and the lower blade pulley (3, Fig. 1). The blade teeth

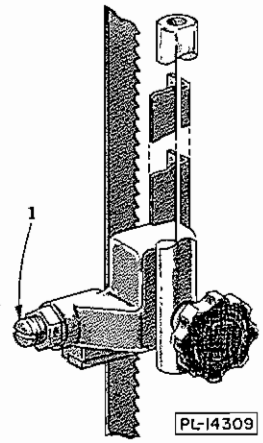

Fig. 2

(5, Fig. 3) must point to the right and downward when viewed from the front of the saw. If the teeth do not point downward, remove the blade, twist it inside out and replace it on the saw. Make sure the blade is properly placed in the upper guide unit (Fig. 2).

Turn the tension adjustment hand wheel (8, Fig. 1) to the right until the figure "3" starts to show in the tension indicator (2, Fig. 4). Give the upper blade pulley a few turns by hand so that the blade centers itself on the pulleys. Then turn the tension adjustment hand wheel slowly to the right until the indicator registers approximately "5" at eye level. This is the best operating tension for the blade.

NOTE: See section "J" for adjustment of blade back-up blocks.

B.4 Position the rear wiper assembly (10, Fig. 3) with holes over the slide studs. Slide to right until spring catch (11, Fig. 3) locks assembly in place. Wipers (9, Fig. 3) should be on both sides of blade.

B.5 Swing up nylon guard (4, Fig. 3). Position front wiper assembly (1, Fig. 3), with blade in slot of steel block (6, Fig. 3) and wipers (2, Fig. 3) on both sides of blade. Align assembly into slot (3, Fig. 3) of wiper bracket slideway and lower into position. Close nylon guard (4, Fig. 3).

B.6 Close head door (5, Fig. 1) (a permanent magnet holds the door in a closed position).

B.7 With the gauge plate (1, Fig. 4) in its vertical position (to clear table area), assemble the table (4, Fig. 4). Holding the table in a low position, slide it to the right then back to the left so that the table cross rod hooks onto the stationary clamp (1, Fig. 5). The four table rests (5, Fig. 4) support and align the angles on the underside of the table. Latch the table down with the table clamp (6, Fig. 4). Assemble and latch the blade cover (4, Fig. 1).

B.8 The carriage may be assembled from either side. Turn the "L" shaped carriage stop (Fig. 6) so that the rubber bumper is toward rear of machine. Align the center bearings of the carriage with the carriage guide (7, Fig. 4). Roll carriage into place. Turn carriage stop (Fig. 6) into stopping position.

B.9 Assemble the switch pull rod and knob assembly (10, Fig. 4). Insert rod through hole in carriage support, then through grommet in base. Turn switch rod and knob assy. clockwise and thread firmly into switch rod connector (8, Fig. 4).

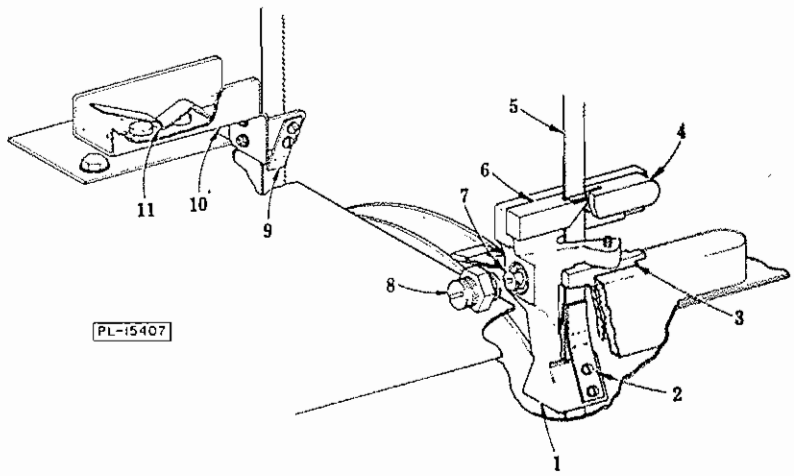

Fig. 3

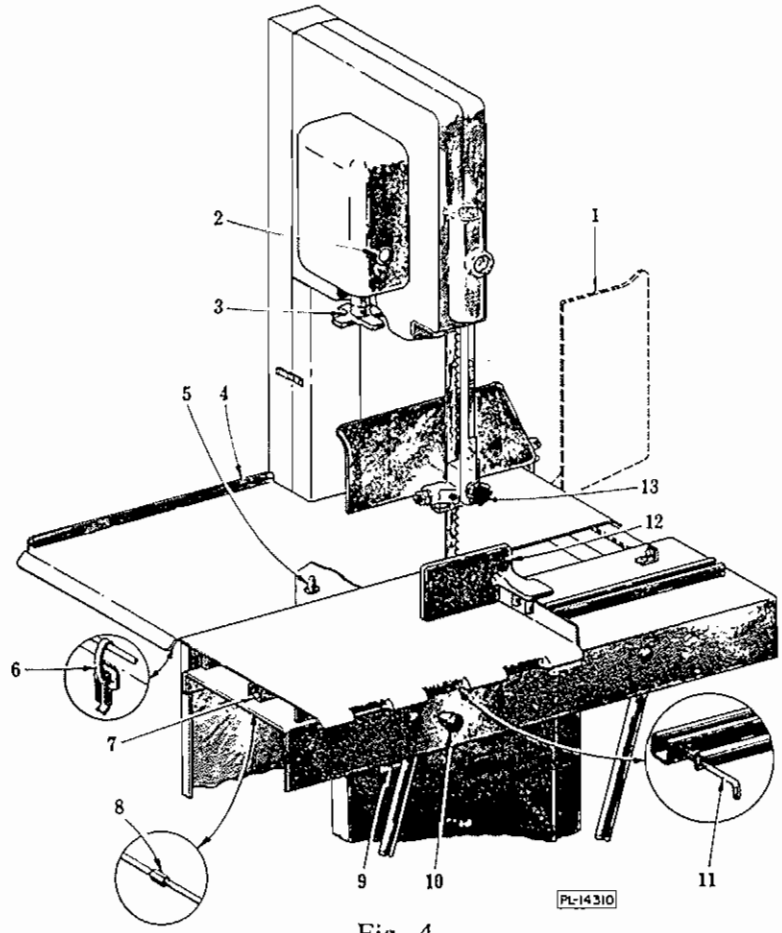

Fig. 4

NOTE: Switch should always be assembled so that switch knob (10, Fig. 4) must be pulled to start machine. Do not reassemble access panel until electrical connections have been made.

C. WIRING:

WARNING: Electrical and grounding connections must be made by qualified workmen who will comply with the applicable portions of the National Electrical Code and/or other electrical codes.

CHECK THE DATA ON THE NAME PLATE (9, Fig. 4) TO MAKE SURE THAT IT AGREES WITH YOUR ELECTRICAL SUPPLY BEFORE CONNECTING TO THE POWER LINE.

A hole located in the lower section of the base is provided for connecting rigid or flexible conduit to the meat saw. A watertight connector (furnished by the customer) should be provided for this connection. Connect power leads directly to contactor leads. The motor leads are already connected to the switch at the factory.

Be sure to use wire large enough to meet your local code requirements. For proper performance use wire sizes of NOT LESS than #12 gauge for 200 & 230 V. on single phase models. Use #14 gauge for 200, 230 and 460 V. on three phase models. For long runs, between power inlet and saw, use a larger size.

D. SAFETY FEATURES:

The Hobart saw is provided with safety devices to give maximum protection to the operator. Keep guards in place at all times.

D.1 UPPER GUIDE & GUARD ASSY. (9, Fig. 1): Keep as low as the size of the work permits for safety reasons.

D.2 DOORS: Keep all doors closed while the machine is running.

D.3 BUTT-END PUSHER (12, Fig. 4): Use the pusher plate as described in section "F.5" and it will be unnecessary to hold your hand near the running saw blade.

D.4 GAUGE PLATE: The end of the gauge plate (1, Fig. 4) is shaped to give maximum support of the product being cut and protection at this critical point. The gauge plate shape also facilitates slice removal.

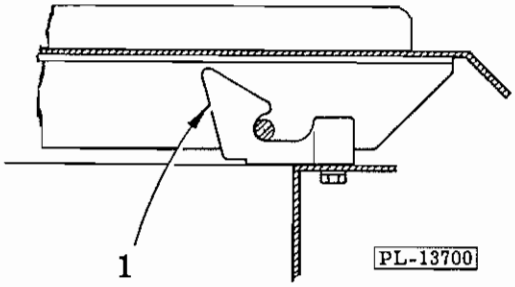

Fig. 5

D.5 SWITCH KNOB (10, Fig. 4): Knob must be pulled to start machine. This eliminates chance starting by accidental bumping of knob.

E. LUBRICATION:

Very little lubrication is required, because all the high-speed shafts have either roller or ball bearings which are grease packed and will operate a long time without attention.

E.1 Keep a small amount of grease in the six ball bearing rollers on the carriage.

E.2 Apply a few drops of oil frequently to the gauge plate rack (4, Fig. 7) and work the gauge plate assembly back and forth a few times. (See cleaning instructions).

E.3 For top operating efficiency have your local Hobart service technician check this machine at least once a year.

F. OPERATION:

F.1 Place the item to be cut on the carriage and turn on the motor switch by pulling switch knob (10, Fig. 4). Stand in front of the machine, leaning lightly against the scalloped front of the carriage, move the carriage to the left, past the saw blade, at a steady and uniform rate. Your left hand will then be free to take away and stack the items as they are cut off. Make it a habit to move your hand around the left side, or back of the saw blade, when reaching for an item – NEVER IN FRONT OF THE TEETH. On the return stroke, pull the item toward you so that it clears the saw blade.

F.2 If a locked carriage is desired: move the carriage to the point where the right end of the carriage is in line with the right end of the table. The carriage lock screw (11, Fig. 4) is then in alignment with the hole in carriage guide. Tighten the lock screw and the carriage is locked in place. With the locked carriage the SAME Safety Procedure of reaching to the left side (or back) of the saw blade when removing or stacking items should ALWAYS be observed.

F.3 When cutting slices of uniform thickness, set the gauge plate at the desired position, by turning the adjusting knob (1, Fig. 7). A scale is etched on the table (4, Fig. 4). If the gauge plate is not needed and interferes with the work, it may be moved out of the way by either of the two following methods:

(a) Lift the adjusting knob (1, Fig. 7) (to disengage the teeth of the rack (4, Fig. 7)) and slide the gauge plate to the rear of the machine.

(b) Raise the gauge plate to a vertical position (1, Fig. 4). In this vertical position, the gauge plate may be slid to any location.

F.4 The adjustable gauging pin (3, Fig. 7), (after being set), permits the operator to raise the adjusting knob (1, Fig. 7), slide the gauge plate back out of the way, then return the gauge plate to its original setting (turn knob (1, Fig. 7), clockwise to "snugup" gauge plate and make sure rack teeth are engaged). To set the gauging pin, loosen hand knob (2, Fig. 7) and slide pin against the support stop. Tighten hand knob.

F.5 Use the pusher plate (12, Fig. 4) to hold the meat against the gauge plate when slicing short ends. Dowels in the pusher plate give the necessary alignment with the raised edge of the carriage. A stop on this raised edge of the carriage prevents over-travel. By holding the pusher plate with your right hand, your hand will then always be a safe distance from the saw blade. Store the pusher plate on the under side of the carriage support (11, Fig. 1) when not in use.

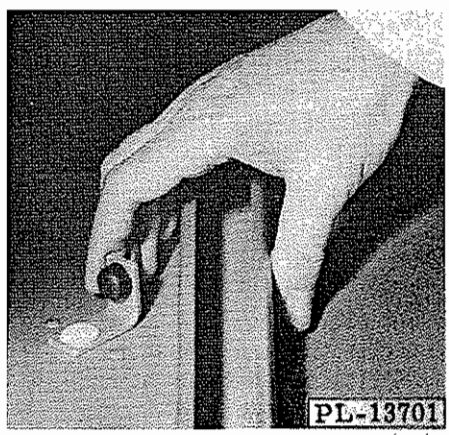

Fig. 6

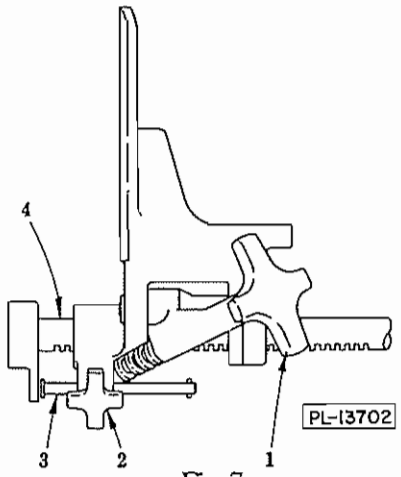

Fig. 7

G. CLEANING & SANITIZING:

This saw has been designed for quick and easy cleaning. It is IMPORTANT that any machine used for the preparation of food be kept in a clean and sanitary condition. Daily cleaning is recommended. Make sure saw is turned "off" and stopped before starting cleaning operation.

PROCEDURE:

G.1 Turn (at either end) the "L" shaped carriage stop (Fig. 6) and roll off stainless steel carriage.

G.2 Rotate gauge plate (1, Fig. 4) to raised or vertical position.

G.3 Open and lift off blade cover (4, Fig. 1).

G.4 Release table clamp (6, Fig. 4) and remove stainless steel table.

G.5 Clean the gauge plate rack (4, Fig. 7).

G.6 Open and lift off head door (5, Fig. 1). Lift out upper pulley wiper (6, Fig. 1). Clean wiper. Do not replace at this time.

G.7 Swing up nylon guard (4, Fig. 3) and lift out front wiper assembly. Clean unit. Do not replace at this time.

G.8 Lift spring catch (11, Fig. 3) and slide rear wiper unit (10, Fig. 3) to the left. Lift up and off. Clean unit.

G.9 Open, lift and remove base door (2, Fig. 1).

G.10 Turn tension adjusting hand wheel, (3, Fig. 4) to the left to release blade tension. Remove saw blade and clean in sink.

G.11 Remove hand knob (13, Fig. 4). Remove upper guide unit (Fig. 2) (with blade already removed or tension released on blade). Clean, lubricate with TASTELESS oil. Do not replace at this time.

G.12 Remove upper (7, Fig. 1) and lower (3, Fig. 1) blade pulleys by opening latches (1, Fig. 8) clear of shafts and sliding pulleys from the shafts. Clean pulleys in sink and lubricate bore before replacing.

NOTE: When replacing pulleys, make sure the pulley latches (1, Fig. 8) are properly seated in grooves of shafts. (Upper and lower blade pulleys are interchangeable).

G.13 All areas are now exposed for easy and thorough cleaning via one of the two following procedures:

G.13.1 HAND CLEANING:

G.13.1.1 Materials required:

G.13.1.1.1 Small nylon bristled brush with (approx.) 12" handle.

G.13.1.1.2 Small plastic two compartment pail.

G.13.1.1.3 Clean cloths.

G.13.1.1.4 Cleaner ("Soilax" All Purpose Cleaner).

G.13.1.1.5 Sanitizer ("Mikro-Klene" iodophor sanitizer).

G.13.1.1.6 Plastic spray bottle (for sanitizer).

G.13.1.2 Procedure (using "Soilax" and "Mikro-Klene"):

G.13.1.2.1 Add two ounces of "Soilax" All Purpose Cleaner to a gallon of hot water in wash side of two compartment pail.

G.13.1.2.2 Mix rinse solution by adding two teaspoons of "Mikro-Klene" in one gallon of cool water in rinse side of pail.

G.13.1.2.3 Brush out large scraps of soil and meat waste.

G.13.1.2.4 Begin cleaning in the upper pulley area. Brush thoroughly all surfaces being sure to get in corners. Work your way down, being sure to dip the brush frequently into the cleaning solution.

G.13.1.2.5 Similarly clean the top area (which was covered by the table and the carriage). Work down into the lower pulley housing.

G.13.1.2.6 Remove the scrap pan and wash separately in sink, Brush clean, the housing and the area around the scrap pan.

G.13.1.2.7 Rinsing and sanitizing can be done in one of two ways:
(a) Go over all cleaned surfaces with a cloth soaking wet in the "Mikro-Klene" rinse solution.
(b) Rinse in fresh water and apply "Mikro-Klene" solution via of spray bottle.

G.13.1.2.8 Allow all surfaces to drain dry and then reassemble. Do not wipe dry.

G.13.1.2.9 Protect saw from recontamination by covering.

G.13.1.2.10 Rinse the nylon brush thoroughly under running water. Then dip the brush in standard solution of "Mikro-Klene" and allow to drain dry in covered container or wrapped in a freshly laundered towel. Cloth used for rinsing should be sent to laundry, or discarded. Wash out pails.

G.13.2 HYDRAULIC CLEANING:

G.13.2.1 Materials required (Economics Laboratory System).

G.13.2.1.1 Model E "Mikro-Spray" (Economics Laboratory, Inc.).

G.13.2.1.3 "Mikro-Quat" detergent-sanitizer.

G.13.2.2 Procedure:

G.13.2.2.1 Insert an eight ounce bottle of "Mikro-Quat" into the Model E "Mikro-Spray" and turn on the hot water.

G.13.2.2.2 Spray clean and sanitize both pulley housings and the table area. Be sure to get the hose stream into all corners. Stubborn soil may require a little brushing.

G.13.2.2.3 Rinse with fresh water from another hose and allow to drain dry. Cover and store as in procedure G.13.1.

G.13.2.2.4 Either a floor drain or a wet vacuum pick-up machine is required to dispose of the cleaning and rinsing solutions. It may also be desirable to have a portable shower curtain type arrangement to prevent excess splashing into other areas of the work space.

H. CHANGING SAW BLADES:

H.1 Turn the left-hand carriage stop (see section G.1) and move the carriage to the left a few inches beyond the nylon guard (4, Fig. 3).

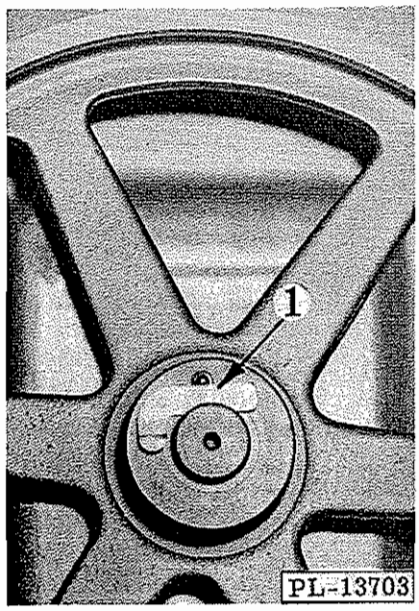

Fig. 8

H.2 Raise gauge plate (1, Fig. 4) to vertical position.

H.3 Turn tension adjusting hand wheel (3, Fig. 4) to left to release blade tension.

H.4 Remove blade cover assembly (4, Fig. 1).

H.5 Release table clamp (6, Fig. 4) and remove table.

H.6 Open head door (5, Fig. 1).

H.7 Swing up nylon guard (4, Fig. 3).

H.8 Remove saw blade.

H.9 Assemble new blade. Make sure front and rear lower blade wipers are on both sides of blade.

H.10 Turn the tension adjusting hand wheel (3, Fig. 4) to the right until the edge of the "3" first appears in the window (2, Fig. 4).

H.11 Turn the upper blade pulley (7, Fig. 1) by hand to center the blade.

H.12 Turn the tension adjusting hand wheel to the right until the indicator (2, Fig. 4) registers "4" at eye level.

H.13 Close the lower nylon guard (4, Fig. 3).

H.14 Reassemble table and other disassembled parts.

J. ADJUSTMENT OF BLADE BACK-UP BLOCK:

Special TUNGSTEN CARBIDE blade back-up blocks take the cutting thrust. They are located at the back edge of the saw blade, in the upper guide (Fig. 2) and the front lower wiper unit (Fig. 3).

J.1 Adjust the upper back-up block by turning screw (1, Fig. 2).

J.2 Adjust the lower back-up block (7, Fig. 3) by turning screw (8, Fig. 3).

NOTE: Clearance between back-up blocks and blade should be approximately 1/32" (with the saw running without load). ALWAYS check and adjust to this dimension after changing saw blades, as blade widths may vary.

K. BLADE REPLACEMENT:

Two saw blades are furnished as regular equipment with each machine. Replacement blades are available through all Hobart offices.

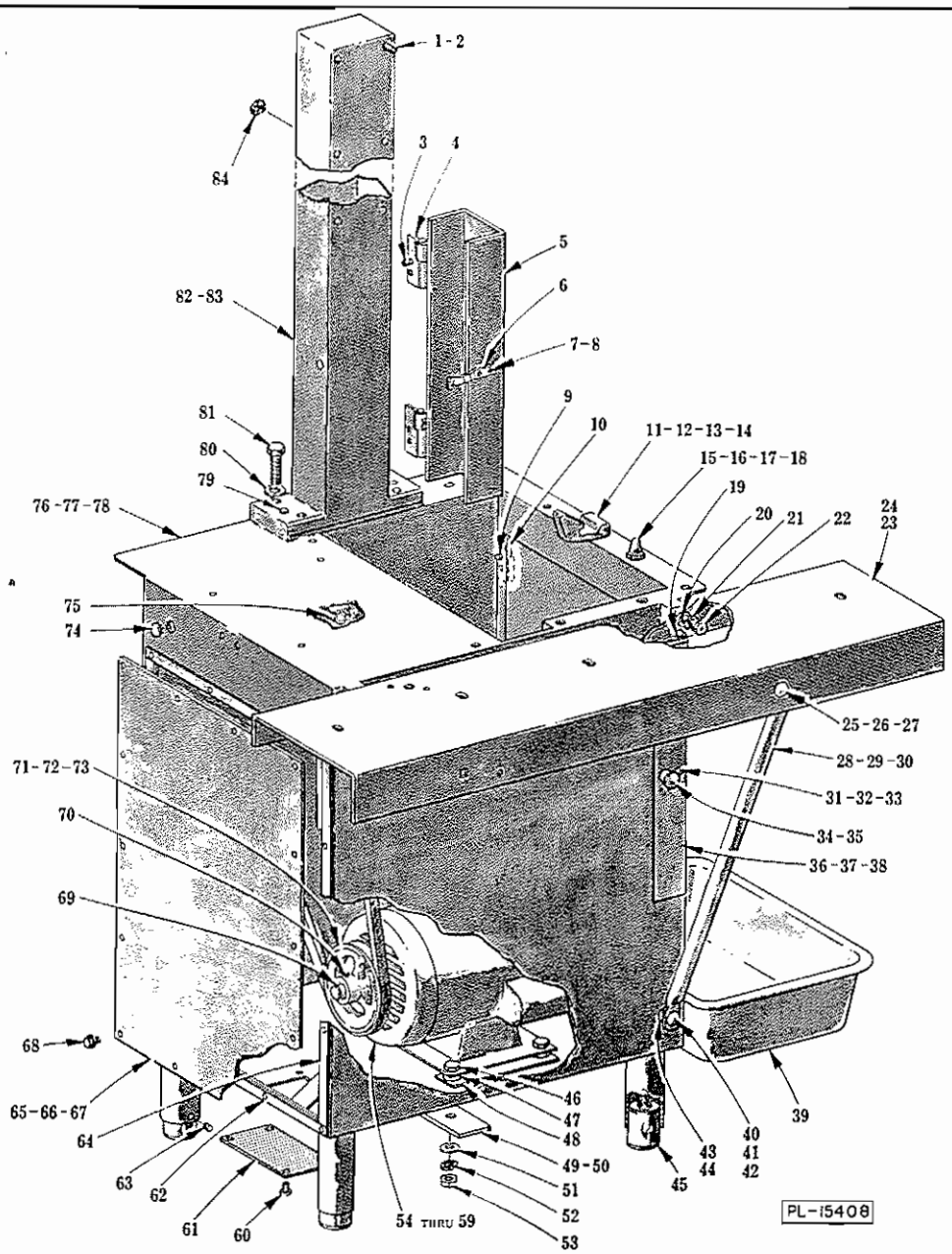

BASE UNIT

ILLUS. PL-15408	PART NO.	NAME OF PART	AMT.
1	SC-40-21	Cap Screw - 3/8"-16 x 7/8" Soc. Hd.	8
2	WL-4-1	Lock Washer - 3/8" x .076" x .125"	8
3	SD-24-29	Self-Tapping Screw - #10-32 x 3/4" Phil. Flat Hd. "Taptite"	4
4	P-78917	Bracket - Hinge	2
5	D-122374	Blade Cover Assy.	1
6	M-68176	Clip - Spring	1
7	SC-53-1	Mach. Screw - #10-24 x 1/4" Truss Hd.	2
8	WL-8-13	Lock Washer - #10 Int. Shakeproof	2
9	SD-24-29	Self-Tapping Screw - #10-32 x 3/4" Phil. Flat Hd. "Taptite"	4
10	P-78917	Bracket - Hinge	2
11	C-102359	Clamp - Stationary Table	1
12	SC-37-83	Fin. Bolt - 5/16"-18 x 5/8" Hex Hd.	2
13	WS-17-16	Washer	2
14	WL-3-47	Lock Washer - 5/16" x .125" x .078"	2

BASE UNIT (Cont.)

ILLUS. PL-15408	PART NO.	NAME OF PART	AMT.
15	A-102285	Rest - Table	4
16	SC-62-53	Fin. Bolt - 1/4"-20 x 1/2" Hex Hd.	4
17	WL-3-38	Lock Washer - 1/4" x .109 x .062"	4
18	WS-3-45	Washer (Motor Access Compartment)	2
19	PG-11-3	Groov-Pin - Type #4, 5/16" x 3/4"	2
20	WS-18-8	Washer	2
21	WL-4-4	Lock Washer - 3/8" x .136" x .070"	2
22	SC-62-43	Fin. Bolt - 3/8"-16 x 3/4" Hex Hd.	2
23	D-102523-4	Carriage Support Sub-Assy. (Painted and Tinned Mach.)	1
24	D-102523-5	Carriage Support Sub-Assy. (SST Mach.)	1
25	SC-82-38	Carriage Bolt - 3/8"-16 x 1"	2
26	WL-4-4	Lock Washer - 3/8" x .136" x .070"	2
27	NS-13-25	Full Nut - 3/8"-16 Hex Fin.	2
28	S-78993-1	Brace - Carriage Support (Painted Mach.)	2
29	S-78993-2	Brace - Carriage Support (SST Mach.)	2
30	S-78993-3	Brace - Carriage Support (Tinned Mach.)	2
31	SC-8-9	Mach. Screw - #10-24 x 3/8" Rd. Hd.	1
32	NS-9-22	Mach. Nut - #10-24 Hex	1
33	B-120647	Clip - Spring	1
34	B-120039	Knob - Base Door	1
35	SC-8-9	Mach. Screw - #10-24 x 3/8" Rd. Hd.	1
36	E-102380-1	Base Door Sub-Assy. (Painted Mach.)	1
37	E-102380-2	Base Door Sub-Assy. (SST Mach.)	1
38	E-102380-3	Base Door Sub-Assy. (Tinned Mach.)	1
39	E-104075	Pan - Meat Scrap	1
40	SC-82-38	Carriage Bolt - 3/8"-16 x 1"	2
41	WL-4-4	Lock Washer - 3/8" x .136" x .070"	2
42	NS-13-25	Full Nut - 3/8"-16 Hex Fin.	2
43	M-74888-1	Washer - Shim (Painted Mach.)	2
44	M-74888-2	Washer - Shim (Tinned and SST Mach.)	2
45	M-77217-1	Foot & Stud Assy.	4
46	SC-37-74	Fin. Bolt - 3/8"-16 x 1-1/2" Hex Hd.	4
47	M-74888-1	Washer - Shim	4
48	B-122706	Booster - Motor	As Reqd.
49	C-119810-2	Reinforcement - Base (Painted Mach.)	2
50	C-119810-3	Reinforcement - Base (Tinned and SST Mach.)	2
51	WS-18-14	Washer	4
52	WL-4-4	Lock Washer - 3/8" x .136" x .070"	4
53	NS-13-25	Full Nut - 3/8"-16 Hex Fin.	4
54	D-118298-1	Motor (115/200/230 V., 60 Hz., 1 Ph.) (1725 R.P.M.) (Incls. item #69)	1
55	D-118306-1	Motor (200/230/460 V., 60 Hz., 3 Ph.) (1725 R.P.M.) (Incls. item #69)	1
56	D-118298-2	Motor (115/220 V., 50 Hz., 1 Ph.) (1425 R.P.M.) (Incls. item #69)	1
57	D-118306-2	Motor (220/240/380/415 V., 50 Hz., 3 Ph.) (1425 R.P.M.) (Incls. item #69)	1
58	D-118430-1	Motor (200/230/460 V., 60 Hz., 3 Ph.) (3450 R.P.M.) (Incls. item #69)	1
59	D-118430-2	Motor (220/240/380/415 V., 50 Hz., 3 Ph.) (2850 R.P.M.) (Incls. item #69)	1
60	SD-15-21	Self-Tapping Screw - #10-32 x 3/8" Phil. Pan Hd. "Taptite"	8
61	B-119829	Screen - Drain	2
62	B-103193	Gasket (Short)	2
63	SC-64-28	Set Screw - 1/4"-20 x 1/4" Hdls., Kn. Cup Pt. "Nylok"	4
64	B-103192	Gasket (Long)	2
65	A-110386-1	Motor Access Panel & Gasket Assy. (Painted Mach.) (Incls. items #62 & 64)	1
66	A-110386-2	Motor Access Panel & Gasket Assy. (SST Mach.) (Incls. items #62 & 64)	1
67	A-110386-3	Motor Access Panel & Gasket Assy. (Tinned Mach.) (Incls. items #62 & 64)	1
68	SD-32-15	Self-Tapping Screw - #10-32 x 3/8" Hex Washer Hd. "Taptite"	14
69	R-12430-62	Key	1
70	SC-47-32	Set Screw - 5/16"-18 x 5/16" Soc. Hdls., Cup Pt.	1
71	C-119949-1	"V" Pulley - Motor (5.25" O.D.) (60 Hz.) (Incls. item #70)	1
72	C-119949-2	"V" Pulley - Motor (5.95" O.D.) (50 Hz.) (Incls. item #70)	1
73	C-119949-4	"V" Pulley - Motor (4.95" O.D.) (60 Hz.) (Incls. item #70)	1
74	PB-3-6	Plug Button (.680 Dia.) (Painted & Tinned Mach.)	2
75	B-106825-1	Clip - Wiring	2
76	E-119802-1	Base Assy. (Painted Mach.) (Incls. items # 9 & 10)	1
77	E-119802-2	Base Assy. (Tinned Mach.) (Incls. items #9 & 10)	1
78	E-119895	Base Assy. (SST Mach.) (Incls. items #9 & 10)	1
79	D-11800-235	Dowel	2
80	WS-8-48	Washer	4
81	SC-110-11	Cap Screw - 1/2"-13 x 1-1/2" Hex Hd. "Nylok"	4
82	D-122373-1	Column Assy. (Painted Mach.) (Incls. items #3 & 4)	1
83	D-122373-2	Column Assy. (Tinned and SST Mach.) (Incls. items #3 & 4)	1
84	PB-3-6	Plug Button (.680 Dia.)	8

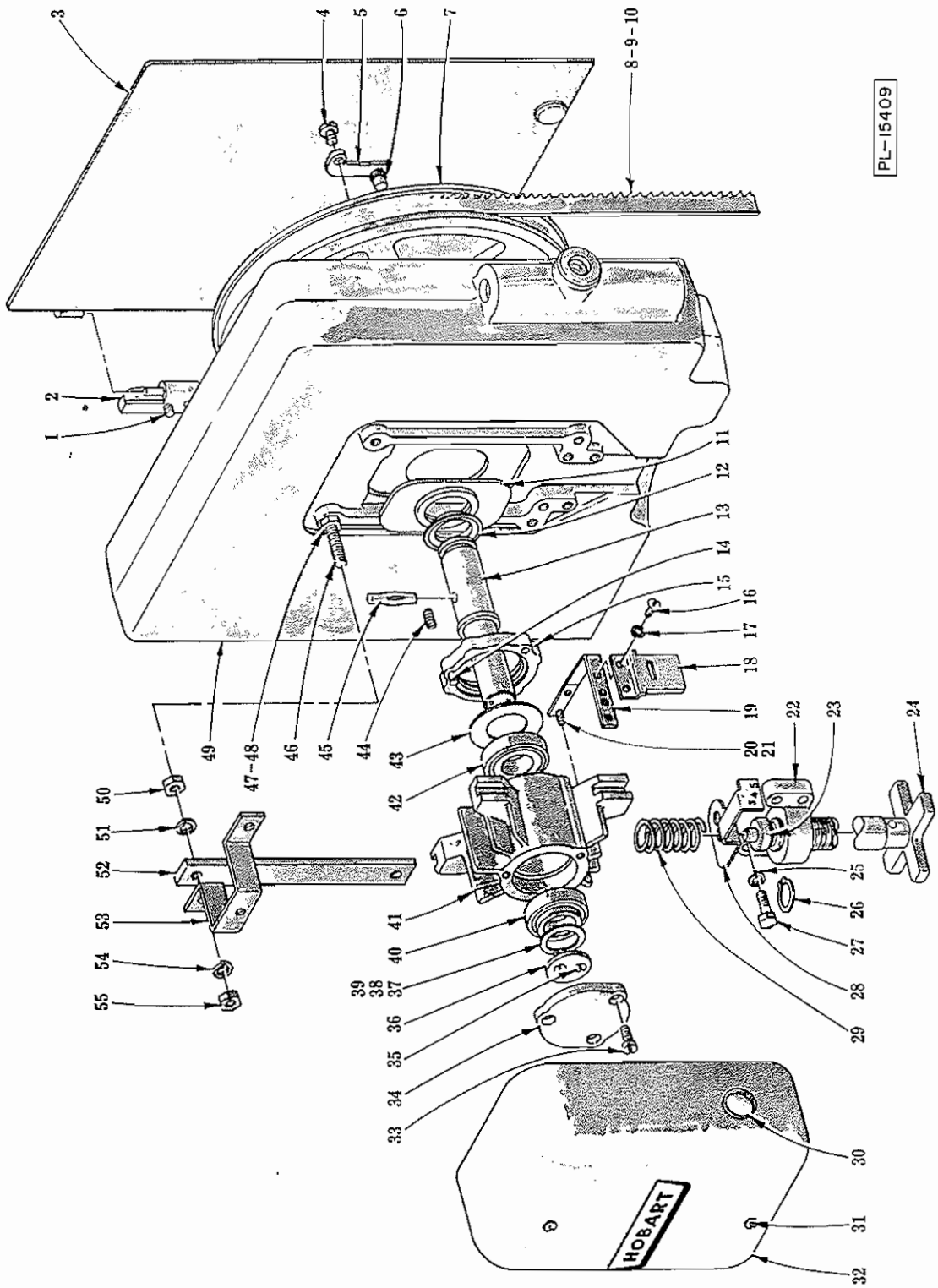

HEAD UNIT

HEAD UNIT

ILLUS. PL-15409	PART NO.	NAME OF PART	AMT.
1	SC-20-15	Mach. Screw - #10-24 x 7/8" Phil. Flat Hd.	4
2	P-78917	Bracket - Hinge	2
3	C-122505	Door Sub-Assy. (Head)	1
4	M-20851	Screw - Latch	1
5	M-20852	Latch	1
6	M-79686	Catch - Friction	1
7	A-108224-2	Flanged Pulley (Blade) Sub-Assy. (Incls. items #4, 5 & 6)	1
8	P-81984	Blade - Meat Saw (.020"-4T) (Standard)	1
9	B-103076	Blade - Meat Saw (.020"-3T) (Frozen Beef/Fish)	1
10	B-103077	Blade - Meat Saw (.014"-3T) (Frozen Fish)	1
11	B-103288	Shield - Bearing Carrier	1
12	A-103178	Seal	1
13	C-108226	Shaft - Upper Bearing Carrier	1
14	SC-12-69	Mach. Screw - 1/4"-20 x 1/2" Fil. Hd.	3
15	B-103029	Cap - Upper Bearing Carrier (Pulley)	1
16	SC-7-71	Mach. Screw - #10-24 x 1/4" Rd. Hd.	2
17	WL-3-22	Lock Washer - #10 x .055" x .040"	2
18	P-67249	Plate - Blade Tension Sight	1
19	P-75817	Bracket - Tension Indicator	1
20	SC-90-45	Fin. Bolt - #10-24 x 3/8" Hex Hd.	2
21	WL-3-22	Lock Washer - #10 x .055" x .040"	2
22	P-75897	Nut - Blade Tension Adjusting	1
23	BB-13-1	Thrust Bearing - Nice #603	1
24	C-120469-2	Hand Wheel & Screw Assy.	1
25	WL-3-44	Lock Washer - 5/16" x .125" x .078"	4
26	RR-4-8	Retaining Ring	1
27	SC-36-28	Fin. Bolt - 5/16"-18 x 1-1/4" Hex Hd.	4
28	P-75816	Indicator - Tension	1
29	M-20867	Spring - Adj. Blade Tension	1
30	M-75656	Window Unit	1
31	SD-31-1	Self-Tapping Screw - #10-24 x 5/8" Truss Hd. "Taptite"	2
32	C-120830	Cover & Window Sub-Assy. (Incls. item #30)	1
33	SC-12-69	Mach. Screw - 1/4"-20 x 1/2" Fil. Hd.	3
34	P-67210	Cap - Upper Bearing Carrier	1
35	SC-99-4	Cap Screw - #10-24 x 1/2" Flat Hd. "Eslok"	2
36	M-67241	Retainer - Bearing	1
37	A-103036-1	Washer - Shim (.002" Thk.)	As Reqd.
38	A-103036-2	Washer - Shim (.005" Thk.)	As Reqd.
39	A-103036-3	Washer - Shim (.008" Thk.)	As Reqd.
40	BR-2-27	Roller Bearing - Cone & Cup Assy.	1
41	D-103022	Carrier - Upper Bearing	1
42	BR-2-27	Roller Bearing - Cone & Cup Assy.	1
43	B-103290	Plate - Bearing Carrier	1
44	M-75837	Spring - Detent	2
45	B-110551	Groov-Pin - Special	1
46	M-75894	Stud - Upper Bearing Carrier Support	4
47	NS-13-22	Full Nut - 3/8"-16 Hex Fin.	4
48	WL-4-2	Lock Washer - 3/8" x .136" x .070"	4
49	D-102526-3	Head & Magnetic Catch Sub-Assy.	1
50	NS-13-22	Full Nut - 3/8"-16 Hex Fin.	4
51	WL-4-2	Lock Washer - 3/8" x .136" x .070"	4
52	P-67187	Gib - Upper Bearing Carrier	2
53	P-67147	Cover Bracket & Weld Nut Assy.	2
54	WL-4-2	Lock Washer - 3/8" x .136" x .070"	4
55	NS-13-22	Full Nut - 3/8"-16 Hex Fin.	4
	C-108227	Upper Bearing Carrier Assy. (Incls. items #11, 12, 13, 14, 15, 33, 34, 35, 36, 37, 38, 39, 40, 41, 42, 43, 44 & 45)	1

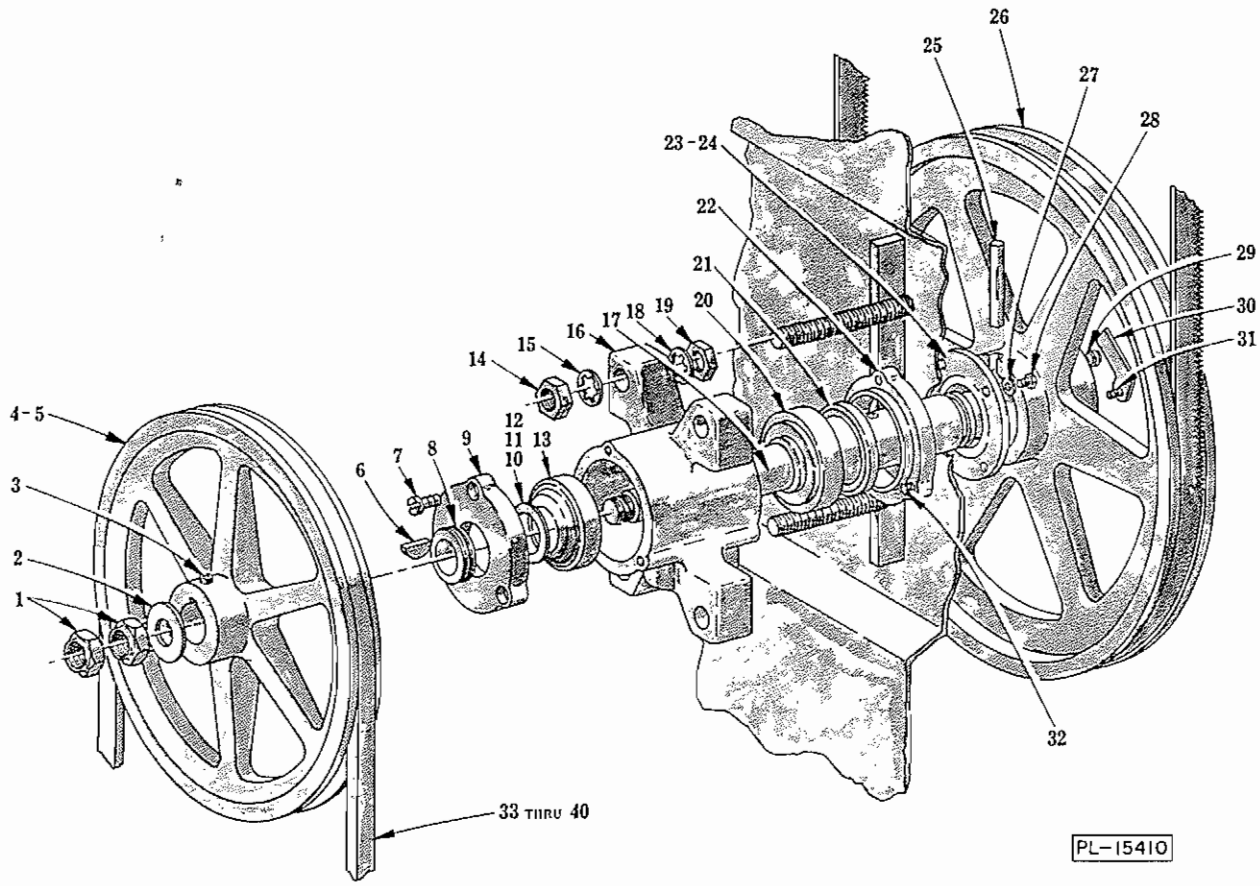

LOWER BEARING CARRIER UNIT

LOWER BEARING CARRIER UNIT

ILLUS. PL-15410	PART NO.	NAME OF PART	AMT.
1	NS-31-43	Stop Nut - 3/4"-16 "Elastic"	2
2	WS-29-12	Washer	1
3	SC-47-32	Set Screw - 5/16"-18 x 5/16" Soc. Hdls., Cup Pt.	1
4	C-119950	"V" Pulley - Bearing Carrier (9.8" O.D.) (1425 & 1725 R.P.M. Motor) (Incls. item #3)	1
5	R-83776	"V" Pulley - Bearing Carrier (12-3/4" O.D.) (2850 & 3450 R.P.M. Motor) (Incls. item #3)	1
6	KW-3-15	Key - #807 Woodruff	1
7	SC-12-69	Mach Screw - 1/4"-20 x 1/2" Fil. Hd.	3
8	B-114560	Conveyor - Lower Bearing Carrier Grease	1
9	C-114561	Cap - Lower Bearing Carrier ("V" Belt Side)	1
10	B-123192-1	Washer - Shim (.002" Thk.)	As Reqd.
11	B-123192-2	Washer - Shim (.005" Thk.)	As Reqd.
12	B-123192-3	Washer - Shim (.008" Thk.)	As Reqd.
13	BR-2-27	Roller Bearing - Cone & Cup Assy.	1
14	NS-13-30	Full Nut - 1/2"-13 Hex Fin.	4
15	WL-8-31	Lock Washer - 1/2" Int. Shakeproof	4
16	D-114562	Carrier - Lower Bearing	1
17	D-119851	Shaft - Lower Bearing Carrier	1
18	WL-8-31	Lock Washer - 1/2" Int. Shakeproof	4
19	NS-13-30	Full Nut - 1/2"-13 Hex Fin.	4
20	BR-2-20	Roller Bearing - Cone & Cup Assy.	1
21	M-71403	Seal - Grease	1
22	M-77319	Bearing Cap & Seal Sub-Assy. (Incls. item #21)	1
23	M-77510-2	Washer & Seal Sub-Assy. (Incls. item #24)	1
24	M-77511	Seal - Diaphragm	1
25	B-110551	Groov-Pin - Special	1
26	A-108224-2	Flanged Pulley (Blade) Sub-Assy. (Incls. items #29, 30 & 31)	1
27	WS-23-34	Washer	4
28	SC-67-12	Mach. Screw - #10-32 x 5/16" Trimmed Hex Hd.	4
29	M-79686	Catch - Friction	1
30	M-20852	Latch	1
31	M-20851	Screw - Latch	1
32	SC-12-69	Mach. Screw - 1/4"-20 x 1/2" Fil. Hd.	3
33	B-120025-1	"V" Belt (1725 R.P.M. Motor) (60 Hz.) (Painted Mach.)	1
34	B-120273-1	"V" Belt (1425 R.P.M. Motor) (50 Hz.) (Painted Mach.)	1
35	B-120025-2	"V" Belt (Heavy Duty) (1725 R.P.M. Motor) (60 Hz.) (Tinned and SST Mach.)	1
36	B-120273-2	"V" Belt (Heavy Duty) (1425 R.P.M. Motor) (50 Hz.) (Tinned and SST Mach.)	1
37	B-122720-1	"V" Belt (3450 R.P.M. Motor) (60 Hz.) (Painted Mach.)	1
38	B-120337-1	"V" Belt (2850 R.P.M. Motor) (50 Hz.) (Painted Mach.)	1
39	B-122720-2	"V" Belt (Heavy Duty) (3450 R.P.M. Motor) (60 Hz.) (Tinned and SST Mach.)	1
40	B-120337-2	"V" Belt (Heavy Duty) (2850 R.P.M. Motor) (50 Hz.) (Tinned and SST Mach.)	1
	C-117022-3	Lower Bearing Carrier Sub-Assy. (Incls. items #7, 8, 9, 10, 11, 12, 13, 16, 17, 20, 22 & 32)	1

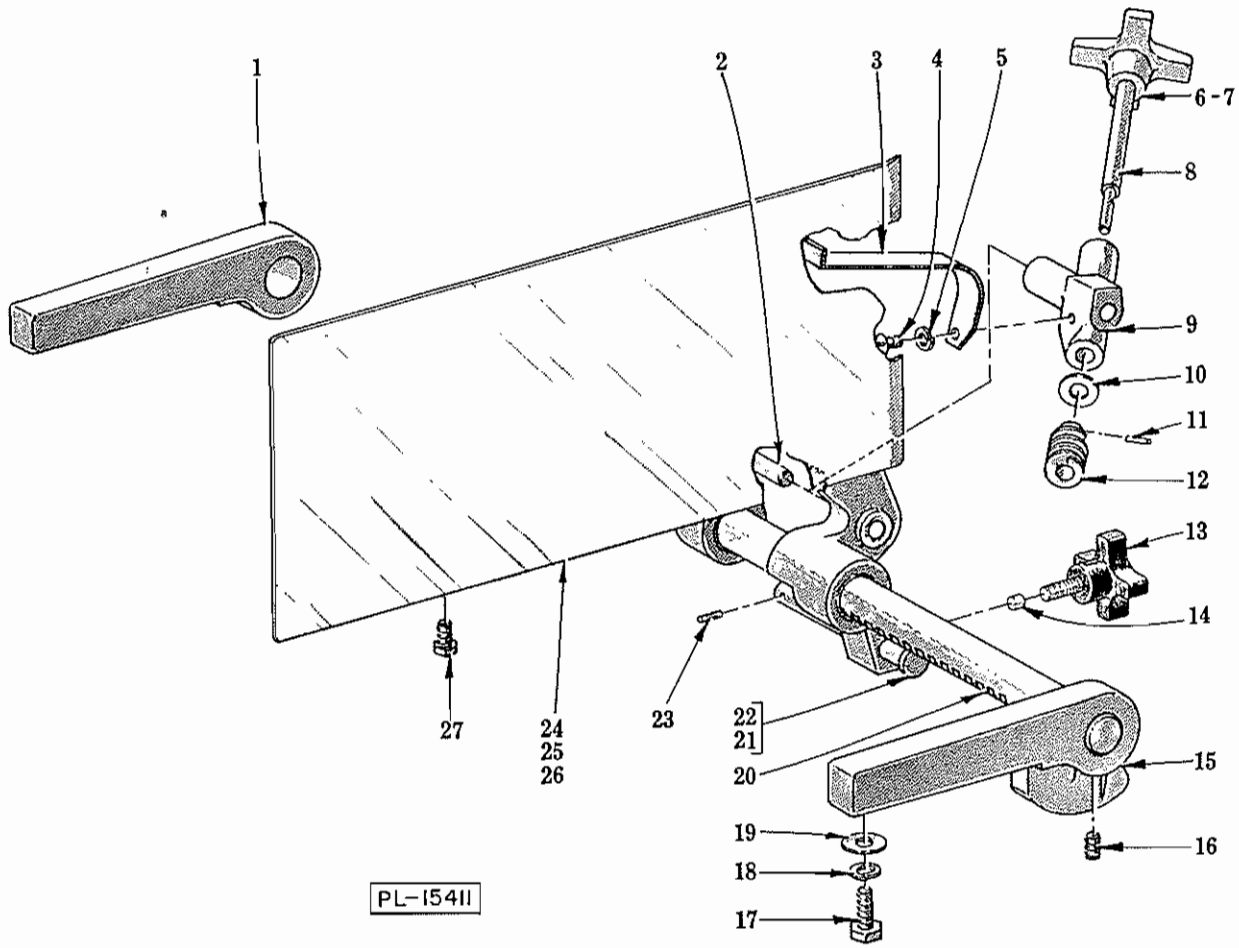

GAUGE PLATE UNIT

GAUGE PLATE UNIT

ILLUS. PL-15411	PART NO.	NAME OF PART	AMT.
1	R-77958-1	Bracket - Gauge Plate Support (Rear)	1
2	M-77235	Pin	1
3	P-77848	Spring - Gauge Plate	1
4	SC-21-14	Mach. Screw - #8-32 x 3/8" Rd. Hd.	1
5	WL-6-1	Lock Washer - #8 x .047" x .031"	1
6	B-118551	Knob	1
7	SC-64-28	Set Screw - 1/4"-20 x 1/4" Soc. Hdls., Kn. Cup Pt. "Nylok"	1
8	M-77843	Shaft - Worm	1
9	M-83481	Worm Bracket & Bearing Sub-Assy.	1
10	WS-18-36	Washer	1
11	PG-7-7	Groov-Pin - Type #5, 1/8" x 7/16"	1
12	M-20887	Worm	1
13	C-118958-1	Knob - Positioning	1
14	M-78920	Slug	1
15	R-78915	Bracket - Gauge Plate Support (Front)	1
16	SC-103-10	Set Screw - 5/16"-18 x 3/8" Soc. Hdls., Cup Pt. "Unbrako/Loc-well"	2
17	SC-62-44	Fin. Bolt - 5/16"-18 x 3/4" Hex Hd.	4
18	WL-3-47	Lock Washer - 5/16" x .125" x .078"	4
19	WS-17-16	Washer	4
20	P-77841-1	Rack - Gauge Plate	1
21	M-85397	Gauging Pin	1
22	WS-18-36	Washer	1
23	PG-11-2	Groov-Pin - Type #5, 7/64" x 1/2"	1
24	D-120136-2	Gauge Plate Sub-Assy. (SST) (USDA)	1
25	C-120138	Arm & Bushing Sub-Assy. (SST) (USDA)	1
26	NS-25-4	Acorn Nut - 1/4"-20	6
27	M-79155	Fin. Mach. Bolt (Special)	1
	E-120139-2	Gauge Plate Assy. (SST) (USDA) (Incls. items #2 thru 14 and 21, 22, 23, 24, 25, 26 & 27)	1
	D-124056-1	Gauge Plate Sub-Assy. (SST) (USDA) (Incls. items #24, 25 & 26)	1
	P-77846	Worm Bracket Sub-Assy. (Incls. items #3 thru 12)	1

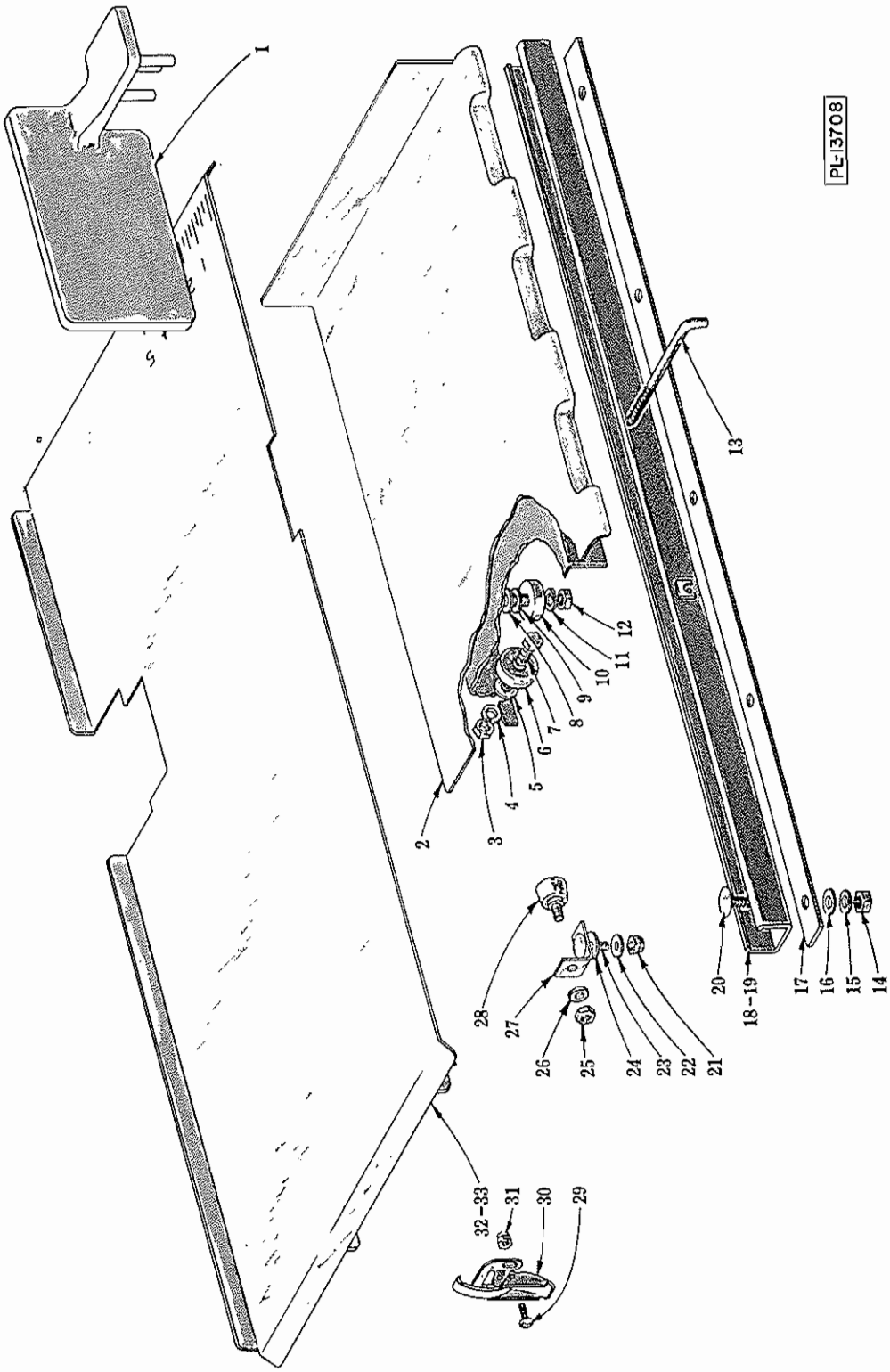

TABLE, CARRIAGE AND TRACK UNIT

TABLE, CARRIAGE AND TRACK UNIT

ILLUS. PL-13708	PART NO.	NAME OF PART	AMT.
1	P-77576-1	Pusher Plate Assy.	1
2	C-119934	Carriage Sub-Assy.	1
3	NS-13-25	Full Nut - 3/8"-16 Hex Fin.	4
4	WL-4-4	Lock Washer - 3/8" x .136" x .070"	4
5	WS-18-5	Washer	4
6	BB-8-11	Ball Bearing - Nice #SK-T2198	4
7	SC-37-73	Fin. Bolt - 3/8"-16 x 1" Hex Hd.	4
8	WS-18-14	Washer (3/64" Thk.)	2
9	WS-18-34	Washer (.010" Thk.)	As Reqd.
10	BB-8-11	Ball Bearing - Nice #SK-T2198	2
11	WL-4-4	Lock Washer - 3/8" x .136" x .070"	2
12	NS-13-25	Full Nut - 3/8"-16 Hex Fin.	2
13	M-78935-1	Screw - Carriage Lock	1
14	NS-15-11	Full Nut - 5/16"-18 Hex Fin.	5
15	WL-6-23	Lock Washer - 5/16" x .125" x .078"	5
16	WS-17-21	Washer	5
17	P-78994-2	Spacer	1
18	R-78989-3	Carriage Guide Sub-Assy. (Painted and Tinned Mach.)	1
19	R-78989-2	Carriage Guide Sub-Assy. (SST Mach.)	1
20	SC-94-20	Carriage Bolt - 5/16"-18 x 1"	5
21	NS-31-29	Stop Nut - 5/16"-18 "Elastic"	2
22	M-70087	Washer - Spring	2
23	SC-94-20	Carriage Bolt - 5/16"-18 x 1"	2
24	WS-18-34	Washer	2
25	NS-15-11	Full Nut - 5/16"-18 Hex Fin.	2
26	WS-17-21	Washer	2
27	B-119827	Stop - Carriage	2
28	B-18682-2	Bumper - Carriage Stop	2
29	SC-10-56	Mach. Screw - #10-24 x 5/8" Truss Hd.	2
30	M-67319	Clamp - Table	1
31	NS-31-10	Stop Nut - #10-24 "Elastic"	2
32	D-102348-1	Table Assy. (Painted and Tinned Mach.)	1
33	D-102348-2	Table Assy. (SST Mach.)	1
	B-120015	Carriage Unit Assy. (Incls. items #2 thru 13)	1

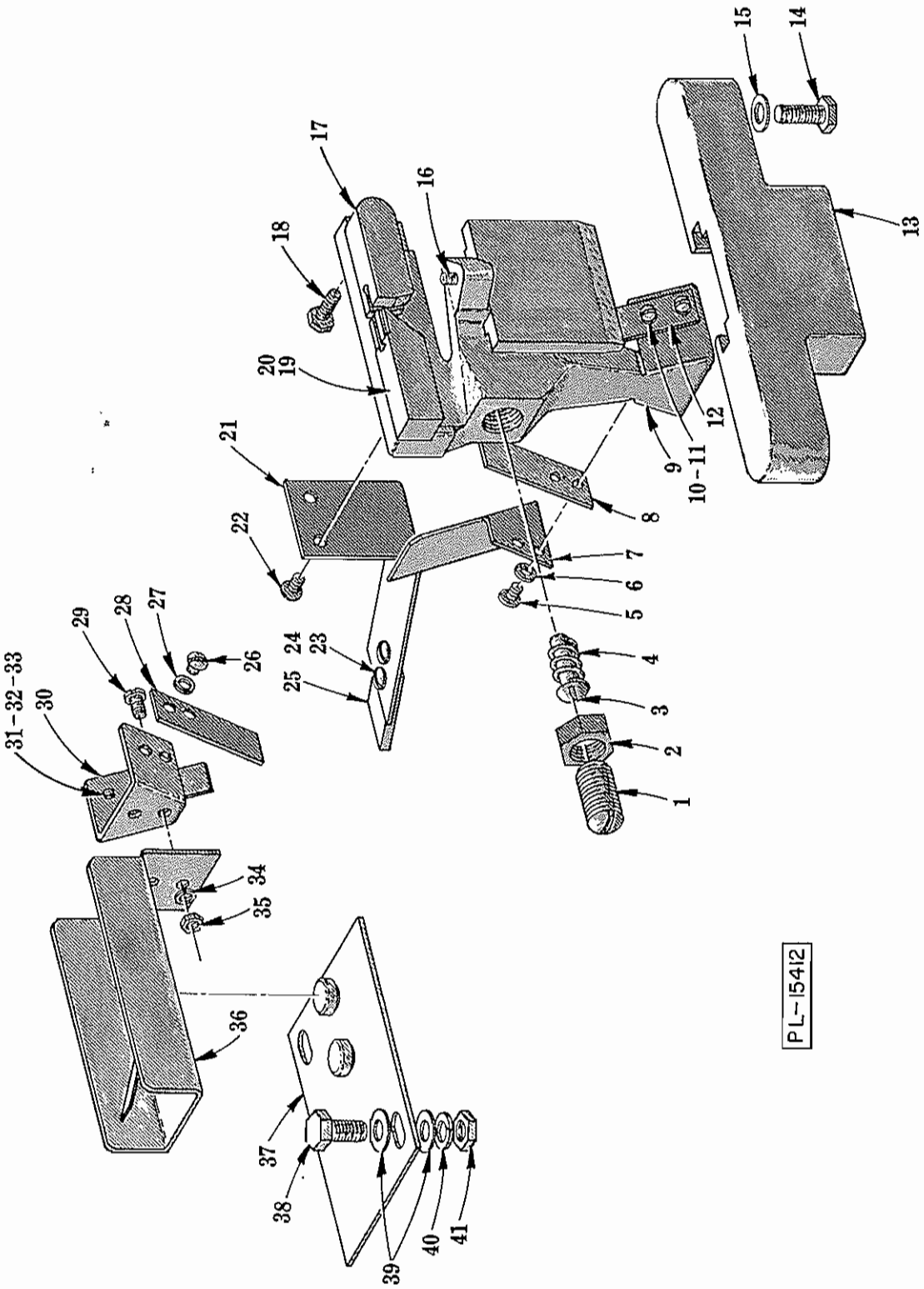

LOWER GUIDE AND WIPER UNIT

LOWER GUIDE AND WIPER UNIT

ILLUS. PL-15412	PART NO.	NAME OF PART	AMT.
1	SC-49-22	Set Screw - 9/16"-18 x 7/8" Hdls., Flat Pt.	1
2	NS-18-33	Jam Nut - 9/16"-18 Hex Fin.	1
3	M-101924	Blade Back Up Block Sub-Assy.	1
4	M-101925	Spring - Back Up Block	1
5	SC-21-85	Mach. Screw - #8-32 x 3/16" Rd. Hd.	2
6	WL-6-2	Lock Washer - #8 x .055" x .040"	2
7	B-121168	Deflector - Scrap	1
8	B-121170	Scraper - Blade	1
9	B-121660	Lower Wiper Support & Bushing Assy.	1
10	WL-6-2	Lock Washer - #8 x .055" x .040"	2
11	SC-21-85	Mach. Screw - #8-32 x 3/16" Rd. Hd.	2
12	B-121170	Scraper - Blade	1
13	C-121162	Slideway - Front Wiper	1
14	SC-37-75	Fin. Bolt - 5/16"-18 x 3/4" Hex Hd.	2
15	WS-17-16	Washer	2
16	SC-109-84	Set Screw - #10-24 x 5/8" Soc. Hdls., Flat Pt.	1
17	B-102653	Guard - Saw Blade	1
18	SC-41-61	Fin. Bolt - 1/4"-28 x 3/4" Hex Hd.	2
19	B-109142-4	Guide - Saw Blade (.020" Blade)	1
20	B-109142-2	Guide - Saw Blade (.014" Blade)	1
21	C-123809-1	Spring - Pulley Wiper	1
22	SD-15-3	Self-Tapping Screw - #10-24 x 1/4" Pan Hd., "Taptite"	2
23	WS-23-34	Washer	2
24	SC-53-1	Mach. Screw - #10-24 x 1/4" Truss. Hd.	2
25	B-123886	Wiper - Pulley	1
26	SC-21-85	Mach. Screw - #8-32 x 3/16" Rd. Hd.	2
27	WL-6-2	Lock Washer - #8 x .055" x .040"	2
28	B-121170	Scraper - Blade	1
29	SC-93-5	Mach. Screw - #8-32 x 1/2" Pan Hd.	2
30	C-121163	Holder - Blade Scraper	1
31	B-121170	Blade - Scraper	1
32	WL-6-2	Lock Washer - #8 x .055" x .040"	2
33	SC-21-85	Mach. Screw - #8-32 x 3/16" Rd. Hd.	2
34	WL-6-2	Lock Washer - #8 x .055" x .040"	2
35	NS-11-12	Mach. Nut - #8-32 Hex	2
36	B-121160	Bracket & Spring Assy.	1
37	B-121158	Rear Wiper Base Assy.	1
38	SC-62-54	Fin. Bolt - 1/4"-20 x 3/4" Hex Hd.	2
39	WS-3-45	Washer	4
40	WL-3-38	Lock Washer - 1/4" x .109" x .062	2
41	NS-13-2	Full Nut - 1/4"-20 Hex Fin.	2
	D-123846-1	Lower Guide & Wiper Assy. (.020" Blade) (Incls. items #1 thru 12 and 16, 17, 18, 19, 21, 22, 23, 24 & 25)	1
	D-123846-2	Lower Guide & Wiper Assy. (.014" Blade) (Incls. items #1 thru 12 and 16, 17, 18, 20, 21, 22, 23, 24 & 25)	1
	B-121169	Rear Wiper Assy. (Incls. items #26 thru 36)	1

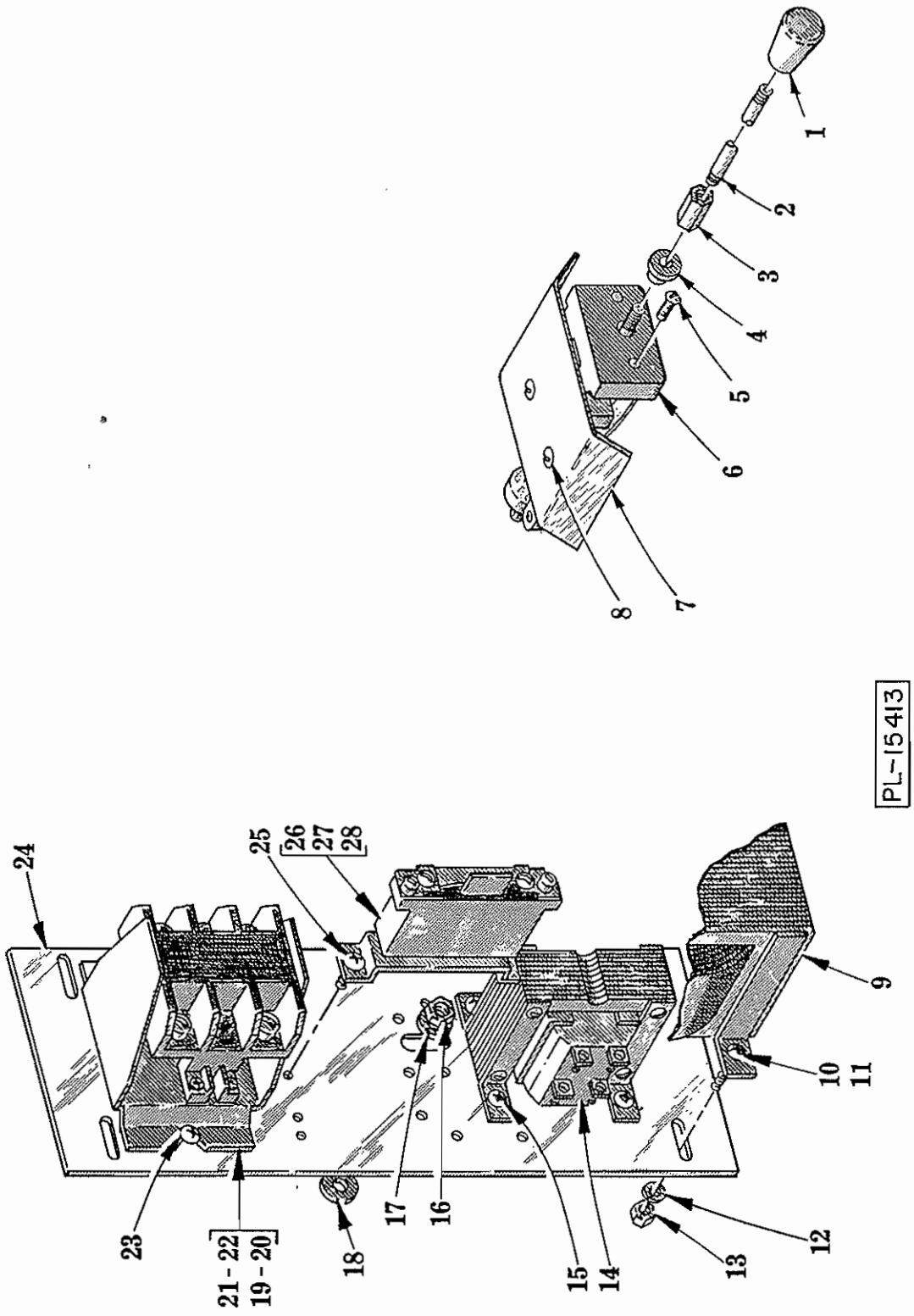

ELECTRICAL UNIT

ELECTRICAL UNIT

ILLUS. PL-15413	PART NO.	NAME OF PART	AMT.
1	B-120054-1	Knob - Switch	1
2	B-119900-2	Extension - Switch Rod	1
3	B-114322	Connector - Switch Rod	1
4	M-80538-1	Bushing - Switch Rod	1
5	SC-53-5	Mach. Screw - #10-24 x 3/8" Truss Hd.	2
6	C-122131	Switch Assy. (Incls. items #7 & 8)	1
7	B-120026	Switch - Insulator	1
8	SC-60-23	Mach. Screw - #4-40 x 1/4" Rd. Hd.	2
9	R-83449	Transformer (380 V. to 115 V.)	1
10	SD-15-40	Self-Tapping Screw - #8-32 x 3/8" Phil Pan Hd. "Taptite"	2
11	SC-9-61	Mach. Screw - #8-32 x 1/2" Rd. Hd.	2
12	WL-3-12	Lock Washer - #8 x .055" x .040"	2
13	NS-9-12	Mach. Nut - #8-32 Hex	2
14	B-101935	Transformer (460 V. to 115 V.)	1
15	SD-15-40	Self-Tapping Screw - #8-32 x 3/8" Phil. Pan Hd. "Taptite"	4
16	NS-13-2	Full Nut - 1/4"-20 Hex Fin.	2
17	WL-3-38	Lock Washer - 1/4" x .109" x .062"	2
18	WS-17-10	Washer	2
19	B-121925-1	Contactor (200/230 V., 60 Hz., 1 Ph.; 220 V., 50 Hz., 1 Ph.)	1
20	B-121925-2	Contactor (115 V., 50/60 Hz., 1 Ph.) (200/230 V., 60 Hz., 1 Ph., W/Pilot Circuit; 220 V., 50 Hz., 1 Ph., W/Pilot Circuit)	1
21	B-121926-1	Contactor (200/230 V., 60 Hz., 3 Ph.; 220/240 V., 50 Hz., 3 Ph.)	1
22	B-121926-2	Contactor (460 V., 60 Hz., 3 Ph.; 380/415 V., 50 Hz., 3 Ph.) (200/230 V., 60 Hz., 3 Ph., W/Pilot Circuit; 220/240 V., 50 Hz., 3 Ph., W/Pilot Circuit)	1
23	SD-15-20	Self-Tapping Screw - #10-32 x 3/8" Phil. Pan Hd. "Taptite"	2
24	D-113861	Panel - Control	1
*25	SD-15-40	Self-Tapping Screw - #8-32 x 3/8" Phil. Pan Hd. "Taptite"	As Reqd.
*26	A-117127	Thermal Overload Relay & Screw Assy. (1 Ph.) (Incls. item #25)	1
*27	A-117127	Thermal Overload Relay & Screw Assy. (3 Ph.) (Incls. item #25)	3
*28	**	Heater Element - Overload Relay	As Reqd.

*Use with Overload Protection.
**Give Elec. Spec., Mach. Model & Motor Type.

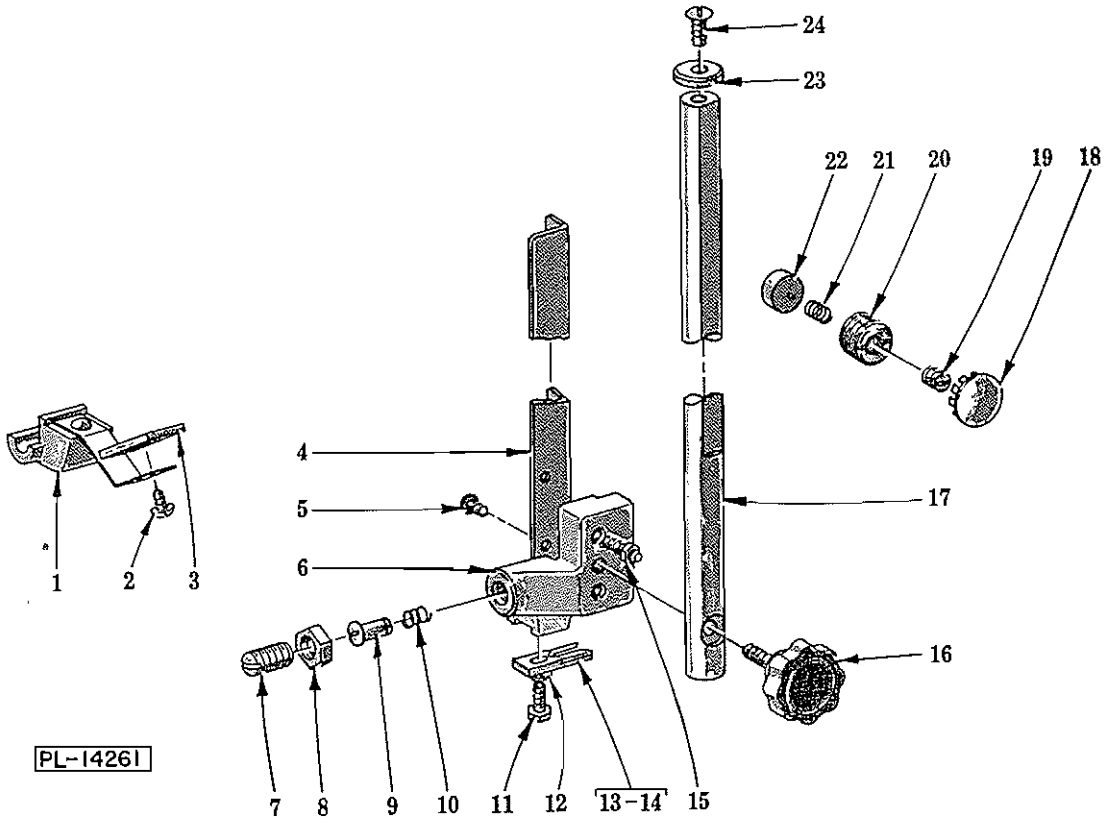

UPPER GUIDE, GUARD AND PULLEY WIPER UNIT

ILLUS. PL-14261	PART NO.	NAME OF PART	AMT.
1	B-102399	Upper Pulley Wiper Assy. (Incls. items #2 & 3)	1
2	SC-53-1	Mach. Screw - #10-24 x 1/4" Truss Hd.	2
3	B-123886	Wiper - Upper Pulley	1
4	C-120443-2	Guard - Upper Guide Blade	1
5	SC-53-5	Mach. Screw - #10-24 x 3/8" Truss Hd.	2
6	B-113863	Upper Guide Support & Bushing Sub-Assy.	1
7	SC-49-22	Set Screw - 9/16"-18 x 7/8" Hdls., Flat Pt.	1
8	NS-18-33	Jam Nut - 9/16"-18 Hex Fin.	1
9	M-101924	Blade Back Up Block Sub-Assy.	1
10	M-101925	Spring - Back Up Block	1
11	SC-67-6	Mach. Screw - #10-24 x 1/2" Trimmed Hex Hd.	1
12	A-104573	Washer - Belleville	1
13	P-101929-4	Guide - Blade (.020" Blade)	1
14	P-101929-2	Guide - Blade (.014" Blade)	1
15	A-102322	Screw - Adjusting	2
16	C-120444-1	Knob - Positioning	1
17	B-102321-4	Rod - Slide	1
18	PB-2-26	Plug Button	1
19	SC-63-33	Set Screw - 3/8"-16 x 3/8" Hdls., Flat Pt.	1
20	B-120140	Screw - Slide Rod Adjusting	1
21	M-75866	Spring - Slide Rod Adjusting	1
22	B-120141	Shoe - Slide Rod	1
23	M-69849	Stop - Slide Rod	1
24	SC-53-16	Mach. Screw - 5/16"-18 x 5/8" Truss Hd.	1
	C-113850-5	Upper Guide and Guard Sub-Assy. (.020" Blade) (Incls. items #4, 5, 6, 7, 8, 9, 10, 11, 12, 13 & 15)	1
	C-113850-6	Upper Guide and Guard Sub-Assy. (.014" Blade) (Incls. items #4, 5, 6, 7, 8, 9, 10, 11, 12, 14 & 15)	1