INSTRUCTIONS



MODEL 6115 POTATO PEELER

MODEL

ML-137600 6115 (with Timer)

HOBART

701 S. RIDGE AVENUE
TROY, OHIO 45374-0001

937 332-3000

www.hobartcorp.com

FORM 37004 Rev. D (January 2025)

TABLE OF CONTENTS

GENERAL 3

INSTALLATION 3
- Peeler Unit (Without Peel Trap) 4
- Lexan Liner 4
- Peeler Unit (With Peel Trap) 5
- Plumbing (Units With Peel Trap) 7
  - Fill Tube 7
  - Drain 7
- Electrical Connections 7

OPERATION 7

CLEANING 8

MAINTENANCE 9
- Motor 9
- Lubrication 9

TROUBLESHOOTING 9
- Service 9
- Installation Diagram (With Trap) 10
- Installation Diagram (Without Trap) 11

NOTES 12

© HOBART, 2025

Installation, Operation and Care of MODEL 6115 PEELER

SAVE THESE INSTRUCTIONS

GENERAL

The model 6115 Peeler is designed to peel 15 to 20 lb (7.0 to 9.0 kg) of product in 1 to 3 minutes using 1/3 HP electric motor. The 6115 includes a 4-minute, synchronous timer which increments from 1/2 to 4 minutes and is a single-phase electrical service ONLY.

The peelers incorporate a reinforced peeling disc with abrasive permanently bonded to its surface and a Lexan Liner for the inside of the hopper. The timer is mounted on the right side of discharge chute as standard but can be ordered on the left or changed in the field. The bottom of peeler unit is cushioned with a rubber trim molding which also provides a seal.

Optional accessories include a peel trap, a portable stand and a peel trap basket.

INSTALLATION

This peeler was inspected before leaving the factory. The carrier assumes full responsibility for the safe delivery upon acceptance of the shipment. Check for possible shipping damage immediately after receipt.

If the peeler is found to be damaged, complete the following steps;

1. Carrier must be notified within 5 business days of receipt.
2. Carrier's local terminal must be notified immediately upon discovery (note time, date, and who was spoken to), and follow up and confirm with written or electronic communication.
3. All original packing materials must be kept for inspection purposes.
4. The peeler cannot have been moved, installed, or modified.
5. Notify Hobart customer care at (800) 333-7447.

This machine MUST be cleaned after installation and before being put into service. Refer to CLEANING for instructions.

PEELER UNIT (WITHOUT PEEL TRAP)

Remove the peeler unit from its shipping carton and remove the hopper top (Fig. 1). Remove the fill tube and bracket assembly (Fig. 1), as well as the fill hose (Fig. 1) and clamp, from inside the peeler housing. DO NOT remove the rubber molding on bottom of peeler.

Lay the peeler on its side and remove the bottom cover plate (Fig. 1) by removing the four screws. Remove the corrugated packing material from between the motor and peeler housing. Replace the bottom cover and set the machine upright.

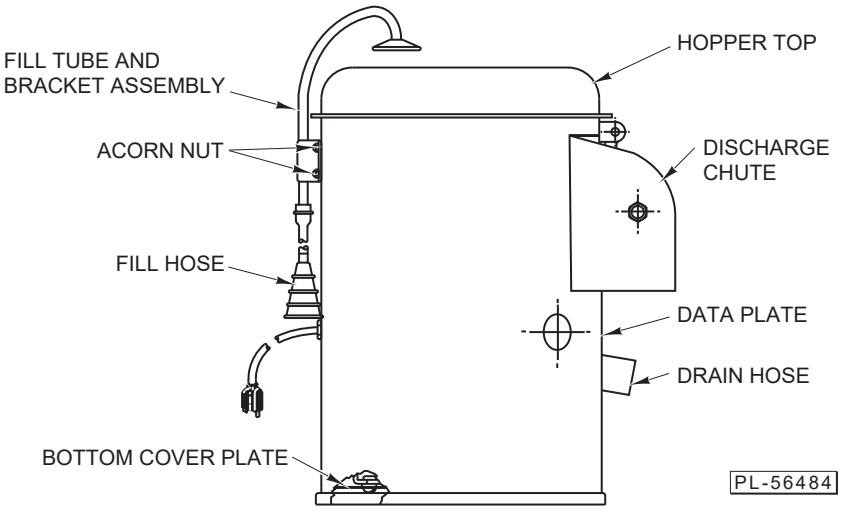

Fig. 1

The four acorn nuts (Fig. 1), for attaching the fill tube and bracket assembly, are threaded onto their studs for shipment. Remove the four acorn nuts, leaving the gasket in place, and attach the fill tube and bracket assembly.

Use pliers to depress the fill hose clamp and slide fill hose up onto the bottom of the fill tube.

If the optional portable stand is to be used, position peeler on top of stand and fasten it with the four bolts (supplied). This completes installation for units without peel trap.

LEXAN LINER

1. Slide the liner (Fig. 2) into the hopper with the keeper to the right side (when viewed from the discharge chute) of the discharge chute. Ensure the liner is under retaining brackets (Fig. 2) on the left side of the discharge chute and resting on the top of the lip (Fig. 2) on the bottom of the hopper chamber.
2. Push the liner keeper into the hole (Fig. 3) provided.
3. Secure the keeper using the exterior latch.

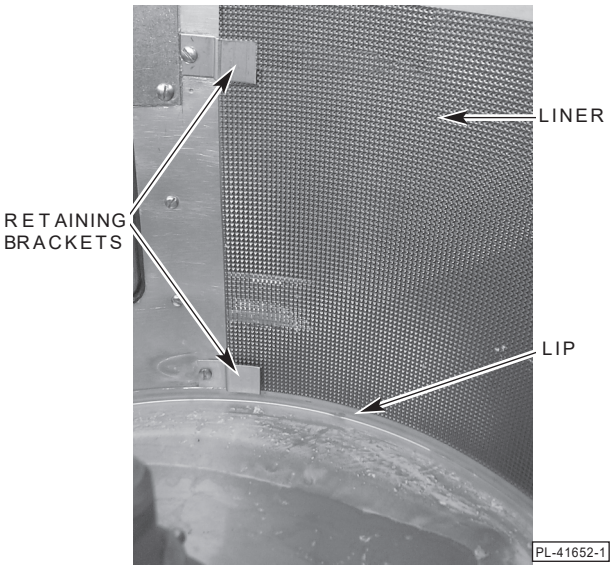

Fig. 2



Fig. 3

PEELER UNIT (WITH PEEL TRAP)

If the unit is equipped with a peel trap basket, assemble basket per instructions on tag attached to the basket.

Remove the peeler unit from its shipping carton and remove the hopper top (Fig. 1). Remove the fill tube and bracket assembly (Fig. 1), as well as the fill hose (Fig. 1) and clamp, from inside the peeler housing. DO NOT remove the rubber molding on bottom of peeler.

Lay the peeler on its side and remove the bottom cover (Fig. 1) by removing the four screws. Remove the corrugated packing material from between the motor and peeler housing. Do not replace the bottom cover.

Unpack the peel trap from its shipping carton. Remove the legs and the cloth bag from inside the peel trap. The cloth bag contains hardware for attaching the legs.

It will be necessary to remove the peel trap drawer (Fig. 4) to allow enough room for attaching the legs.

Assemble as follows (Fig. 4):

- Assemble one of the rubber gaskets to one of the curved leg clamp bolts.
- Assemble bolt and gasket through one of the upper leg bolt holes in peeler housing.
- Assemble a leg and a leg slot cover on the leg clamp bolt.
- Place acorn nut onto the leg clamp bolt and partially tighten nut.
- Assemble cap screw, stainless steel washer and rubber washer.
- Place cap screw and washers through lower leg bolt holes and slot cover.
- Place acorn nut onto cap screw and partially tighten.
- Assemble each leg in this manner. When all are assembled, set the unit upright.

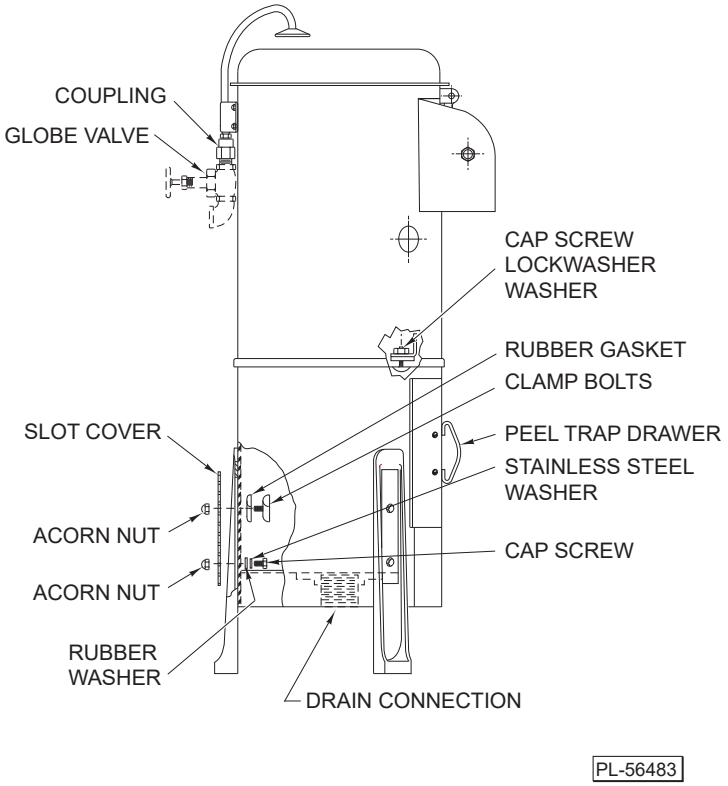

Fig.4

Adjust each leg to a suitable height so the unit is level, and tighten the acorn nuts.

Set the peeler upside-down and, using a pair of pliers, squeeze the hose clip and remove the peeler drain hose (Fig. 1). Replace this hose with the drain hose packed inside the peel trap.

The peeler may be positioned on the peel trap in one of four positions. Each of the positions will cause the peel trap drawer to be located in a different position relative to the discharge chute.

The peel trap drawer may be directly beneath the discharge chute, to the right, left or rear (see Fig. 5).

After selecting the most convenient position for the peel trap drawer, remove the cover disc from the appropriate hole in peel trap and position the peeler on top of the peel trap, with the peeler drain hose extending through selected hole (Fig. 5).

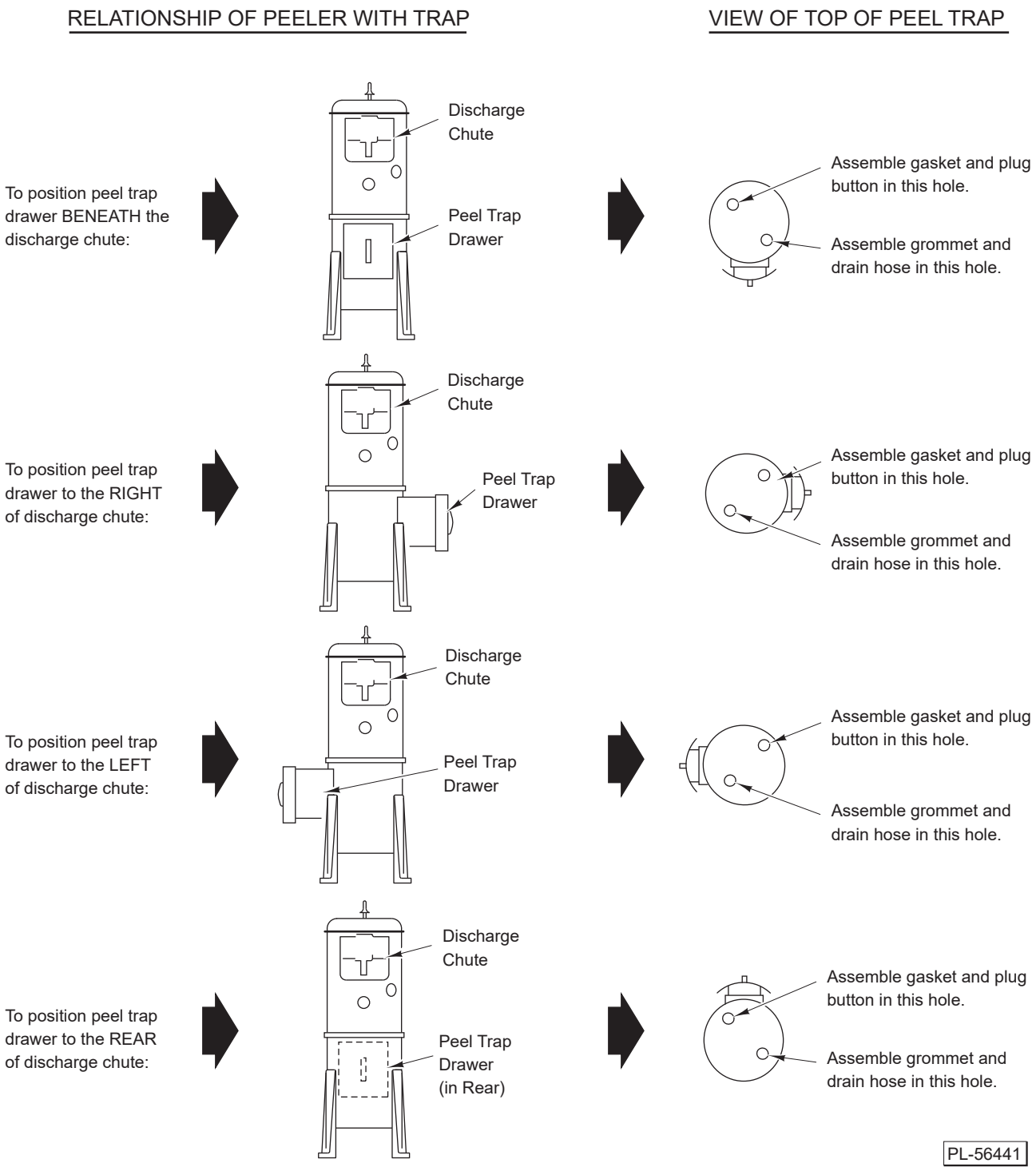

Fig. 5

The cloth bag shipped in peel trap drawer contains the four cap screws, lockwashers and washers (Fig. 4) for fastening the peeler to the peel trap.

NOTICE Excessive tightening of screws may distort housing.

If desired, the peel trap legs may be bolted to the floor.

Attach the fill tube and bracket assembly (Fig. 1) to the peeler using the supplied acorn nuts and gasket (which are attached to the peeler for shipment).

PLUMBING (UNITS WITH PEEL TRAP)

⚠ WARNING Plumbing connections must comply with applicable sanitary, safety and plumbing codes.

Fill Tube

The ½" coupling (Fig. 4) should be connected to the fill tube. This coupling is provided for a permanent cold water connection and replaces the rubber fill hose.

NOTE: A globe valve for controlling water supply should be installed in the water supply line at a location convenient to the operator.

Drain

The peel trap is provided with a 2" drain connection (Fig. 4).

ELECTRICAL CONNECTIONS

Before making electrical connections, check the specifications on the data plate (Fig. 1) to ensure they agree with those of your electrical service.

⚠ WARNING Disconnect the electrical power to the machine and follow lockout / tagout procedures.

To move the timer to the opposite side of the discharge chute, simply remove the screws that attach the timer and cover plates. Interchange the timer and cover plates, and fasten each with the screws.

OPERATION

Where applicable, fit the rubber fill hose connector (Fig. 1) over any cold freshwater tap.

Position the hopper top (Fig. 1) in place on the peeler housing.

Close and latch the discharge chute door.

NOTE: The discharge chute door MUST always be left open when the unit is not in use.

Pour product into the hopper. There should be room in the hopper for product to move around while peeling. Do NOT overload the peeler. The capacity is 15 to 20 lb (7.0 to 9.0 kg) maximum.

Turn on water supply.

Set timer at the desired peeling time.

Peeling times will vary, depending on the type and condition of the product. When the desired degree of peeling has been reached, turn off the water. Place a container under the discharge chute to catch product and open the discharge chute door.

NOTE: When timer has expired, it will be necessary to reset the timer to allow enough time for product to discharge.

After the product has been completely discharged, turn off the timer. It is ready to repeat the operation.

If the peeler is equipped with a peel trap, it will be necessary to empty the peel trap drawer occasionally (after a few batches).

CLEANING

⚠ WARNING Disconnect the electrical power to the machine and follow lockout / tagout procedures.

The peeler should be cleaned after the peeling operation has been completed.

As soon as the peeling has been completed and BEFORE the hopper has had time to dry, turn on the water and flush the interior of hopper. Turn off the water.

Remove the hopper top and clean it in a sink.

Lift out the abrasive disc which is not fastened to the shaft, and scrub it with a brush and mild soap. Clean the housing beneath the abrasive disc with mild soap and water.

Turn on the water and thoroughly clean the interior of the hopper using a mild soap and a brush. Rinse thoroughly.

NOTE: If the abrasive disc should stick and is NOT easily removed, it may be loosened by removing the hex head screw on top of the hub and threading a longer screw (such as 5/16"-18 x 1/2") in until disc loosens.

To remove the lexan liner, unlatch the exterior latch on the outside of the hopper and push the keeper out of the hole (Fig. 3). Slide the liner out from under the retaining brackets. Take to the sink and scrub with a nonabrasive brush, using soap and water to clean. Allow to air dry before installing into the hopper.

If the drawer is equipped with a peel trap, remove the peel trap drawer and thoroughly clean the drawer, as well as the peel trap interior.

The discharge chute MUST be left open when unit is NOT in use to prolong life of the door seal.

MAINTENANCE

MOTOR

This machine is equipped with a manual-reset overload protection switch, located on the outside of the hopper opposite the discharge chute. If, during operation, the motor should overheat and trip this switch, turn the timer off and allow the motor to cool for several minutes. To reset the switch, remove the top screw from the cover plate (Fig. 6), rotate the cover plate and push the red button (Fig. 6). Install round cover plate and screw onto potato peeler.

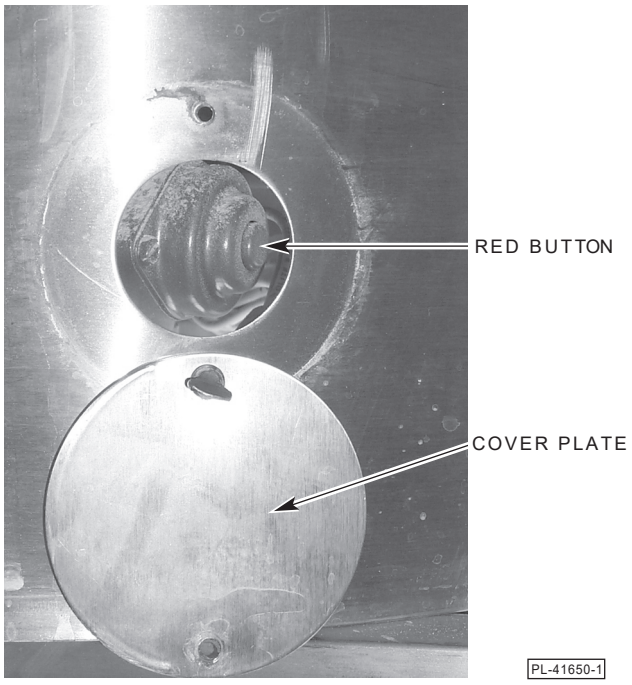

Fig. 6

If the overload protection switch persists in tripping, contact your local Hobart Service Office.

LUBRICATION

The peeler uses sealed ball bearings and therefore, requires no lubrication maintenance.

TROUBLESHOOTING

SYMPTOM	POSSIBLE CAUSE
Peeler will not operate	Peeler is not plugged in.
	Circuit breaker tripped or fuse blown.
Excessive foaming	Too much water in the hopper.
If the above suggestions do not remedy the situation, contact Hobart Service Office.	

SERVICE

Contact your local Hobart-authorized Service Office for any repairs or adjustments needed on this equipment.

LEGEND

E1-CORD & PLUG (APPROX. 5-1/2 FT. FROM SIDE OF THE MACHINE)
P1-DRAIN HOSE (1-15/16" DIA.)
P2-FILL HOSE (5/8" DIA.) EXTENDING 5 FT. FROM END OF FILL TUBE

NET WEIGHT OF MACHINE: 60 LBS.
DOMESTIC SHIPPING WEIGHT: 74 LBS.

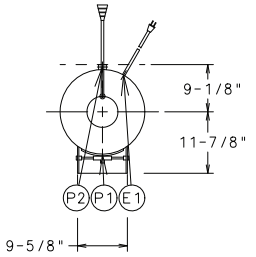

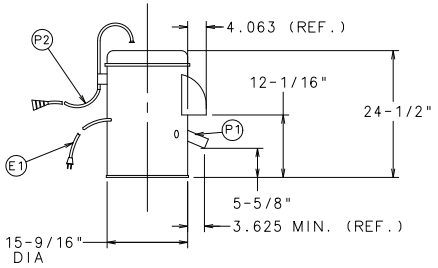

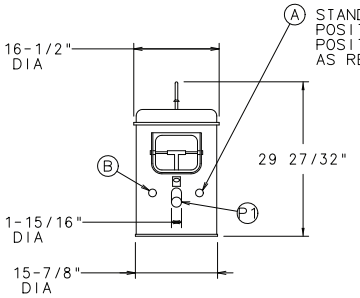

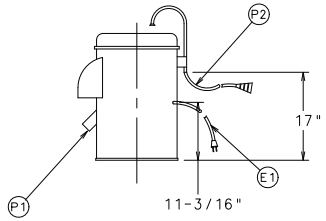

MODEL/ ELEC. CODE	ELECTRICAL SPECIFICATION	AMPS
6115T/A	115/60/1	7.2
6115T/C	230/60/1	3.6

WARNING

ELECTRICAL AND GROUNDING CONNECTIONS MUST COMPLY WITH THE APPLICABLE PORTIONS OF THE NATIONAL ELECTRICAL CODE AND/OR OTHER LOCAL ELECTRICAL CODES.

PLUMBING CONNECTIONS MUST COMPLY WITH APPLICABLE SANITARY, SAFETY AND PLUMBING CODES IN FORCE.

MODEL 6115 PEELER
D-435089
REV. E

PL-56443

LEGEND

E1-CORD & PLUG (APPROXIMATELY 5-1/2 FEET FROM SIDE OF THE MACHINE.)

P1-DRAIN CONNECTION - 2" STANDARD MALE PIPE THREAD

P2-FILL CONNECTION - STANDARD 1/2" FEMALE PIPE THREAD

*THESE DIMENSIONS MAY INCREASE 2-1/2" DEPENDING ON LEG ADJUSTMENT

PEEL TRAP SHIPPED IN CARTON SEPARATE FROM PEELER.
NET WEIGHT OF MACHINE 60 LBS.
DOMESTIC SHIPPING WEIGHT (PEELER) 74 LBS.
NET WEIGHT OF PEEL TRAP 38 LBS.
DOMESTIC SHIPPING WEIGHT (PEEL TRAP) 43 LBS.

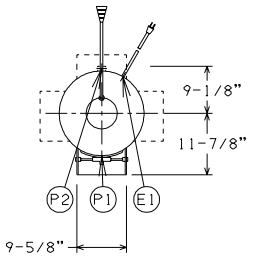

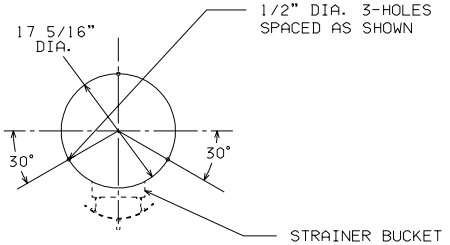

PLAN VIEW OF PEEL TRAP SHOWING HOLES IN LEGS FOR USE IN FASTENING TO FLOOR WHEN REQUIRED.

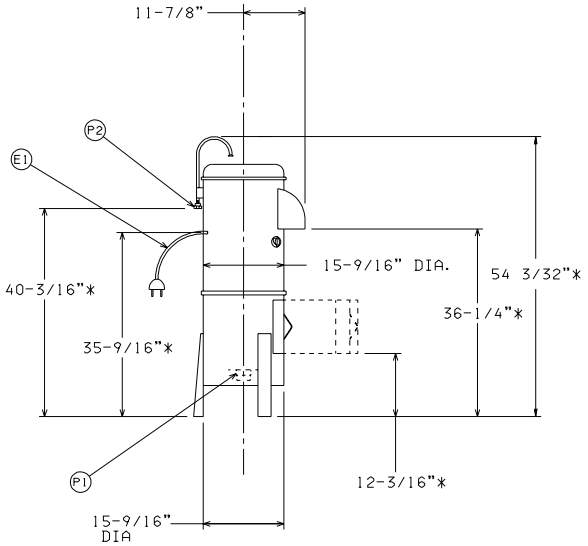

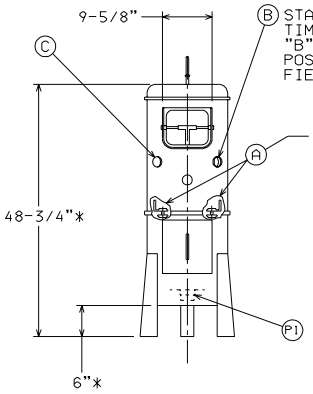

STANDARD LOCATION FOR TIMER IS AT POSITION "B". MAY BE CHANGED TO POSITION "C" IN THE FIELD AS REQUIRED.

THE PEEL TRAP IS SECURED TO THE PEELER AT "A" BY FOUR SCREWS. ASSEMBLY CAN BE MADE SO THAT PEELER WILL DISCHARGE IN ANY ONE OF THE FOUR POSITIONS AS SHOWN IN TOP VIEW.

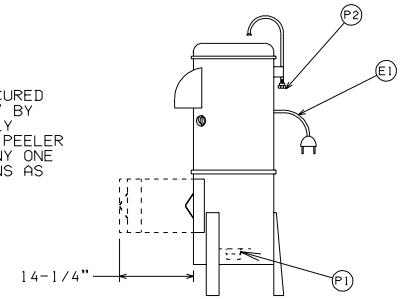

MODEL/ ELEC. CODE	ELECTRICAL SPECIFICATION	AMPS
6115T/A	115/60/1	7.2
6115T/C	230/60/1	3.6

WARNING

ELECTRICAL AND GROUNDING CONNECTIONS MUST COMPLY WITH THE APPLICABLE PORTIONS OF THE NATIONAL ELECTRICAL CODE AND/OR OTHER LOCAL ELECTRICAL CODES.

PLUMBING CONNECTIONS MUST COMPLY WITH APPLICABLE SANITARY, SAFETY AND PLUMBING CODES IN FORCE.

MODEL 6115C PEELER
W/CABINET BASE & TRAP
D-435090
REV. C

PL-56444

NOTES