INSTRUCTIONS

MODEL 6115 POTATO PEELER

MODEL

ML-19869 6115 (with Timer)

HOBART
CORPORATION
701 S. RIDGE AVENUE
TROY, OHIO 45374-0001
937 332-3000
www.hobartcorp.com

FORM 34776 (June 2002)

Installation, Operation and Care of MODEL 6115 PEELER

SAVE THESE INSTRUCTIONS

GENERAL

The model 6115 Peeler is designed to peel 15 to 20 lb (7.0 to 9.0 kg) of product in 1 to 3 minutes using 1/3 HP electric motor. The 6115 includes a 4-minute, synchronous timer which increments from 1/2 to 4 minutes and is a single-phase electrical service ONLY.

The peelers incorporate a reinforced peeling disc with abrasive permanently bonded to its surface and a Lexan Liner for the inside of the hopper. The timer is mounted on the right side of discharge chute as standard but can be ordered on the left or changed in the field. The bottom of peeler unit is cushioned with a rubber trim molding which also provides a seal.

Optional accessories include a peel trap, a portable stand and a peel trap basket.

INSTALLATION

Immediately after unpacking, the machine should be checked for possible damage. If the machine is found to be damaged after unpacking, save the packing material and contact the shipper.

This machine MUST be cleaned after installation and before being put into service. Refer to MAINTENANCE for instructions.

PEELER UNIT (WITHOUT PEEL TRAP)

Remove the peeler unit from its shipping carton and remove the hopper top (Fig. 1). Remove the fill tube and bracket assembly (Fig. 1), as well as the fill hose (Fig. 1) and clamp, from inside the peeler housing. DO NOT remove the rubber molding on bottom of peeler.

Lay the peeler on its side and remove the bottom cover plate (Fig. 1) by removing the four screws. Remove the corrugated packing material from between the motor and peeler housing. Replace the bottom cover and set the machine upright.

The four acorn nuts (Fig. 1), for attaching the fill tube and bracket assembly, are threaded onto their studs for shipment. Remove the four acorn nuts, leaving the gasket in place, and attach the fill tube and bracket assembly.

Use pliers to depress the fill hose clamp and slide fill hose up onto the bottom of the fill tube.

If the optional portable stand is to be used, position peeler on top of stand and fasten it with the four bolts (supplied). This completes installation for units without peel trap.

© HOBART CORPORATION, 1998

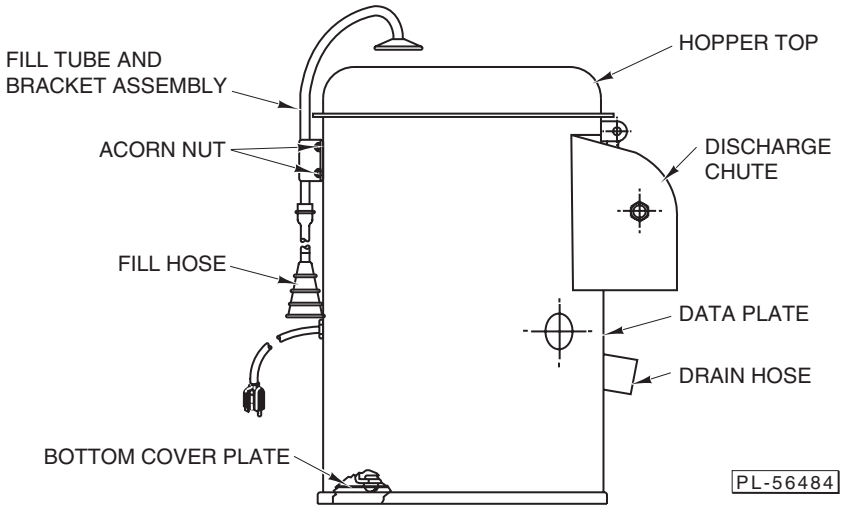

Fig. 1

LEXAN LINER

1. Slide the liner (Fig. 2) into the hopper with the keeper to the right side (when viewed from the discharge chute) of the discharge chute. Ensure the liner is under retaining brackets (Fig. 2) on the left side of the discharge chute and resting on the top of the lip (Fig. 2) on the bottom of the hopper chamber.

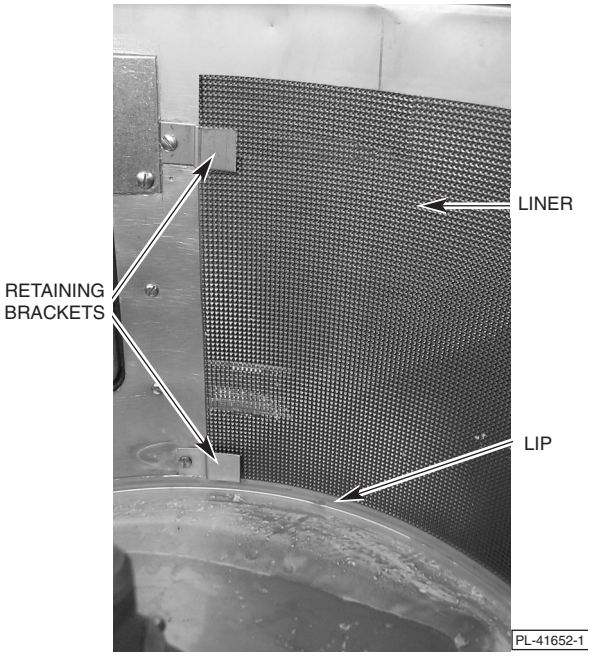

Fig. 2



Fig. 3

2. Push the liner keeper into the hole (Fig. 3) provided.
3. Secure the keeper using the exterior latch.

PEELER UNIT (WITH PEEL TRAP)

If the unit is equipped with a peel trap basket, assemble basket per instructions on tag attached to the basket.

Remove the peeler unit from its shipping carton and remove the hopper top (Fig. 1). Remove the fill tube and bracket assembly (Fig. 1), as well as the fill hose (Fig. 1) and clamp, from inside the peeler housing. DO NOT remove the rubber molding on bottom of peeler.

Lay the peeler on its side and remove the bottom cover (Fig. 1) by removing the four screws. Remove the corrugated packing material from between the motor and peeler housing. Do not replace the bottom cover.

Unpack the peel trap from its shipping carton. Remove the legs and the cloth bag from inside the peel trap. The cloth bag contains hardware for attaching the legs.

It will be necessary to remove the peel trap drawer (Fig. 4) to allow enough room for attaching the legs.

Assemble as follows (Fig. 4):

- Assemble one of the rubber gaskets to one of the curved leg clamp bolts.
- Assemble bolt and gasket through one of the upper leg bolt holes in peeler housing.
- Assemble a leg and a leg slot cover on the leg clamp bolt.
- Place a stainless steel washer and acorn nut onto the leg clamp bolt and partially tighten nut.
- Assemble cap screw, washer and lead washer.
- Place cap screw and washer through lower leg bolt holes and slot cover.
- Place a stainless steel washer and acorn nut onto cap screw and partially tighten.
- Assemble each leg in this manner. When all are assembled, set the unit upright.

Adjust each leg to a suitable height so the unit is level, and tighten the acorn nuts.

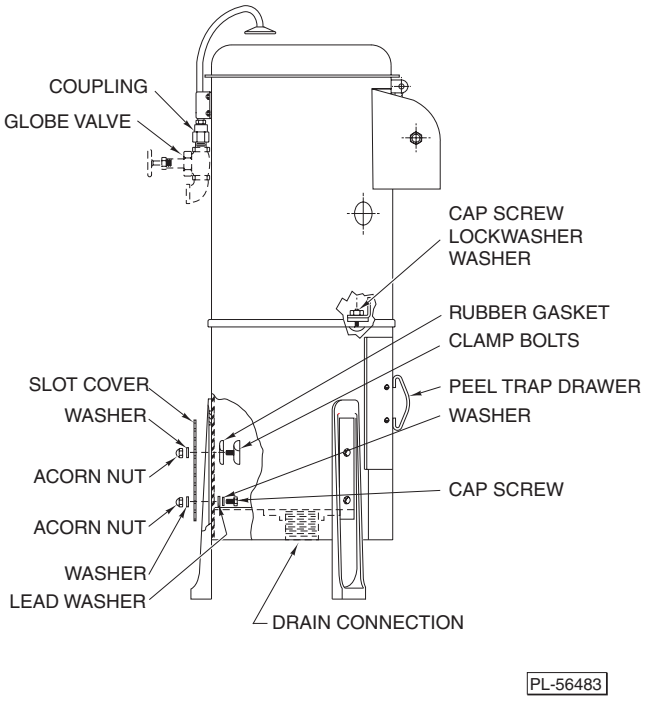

Fig. 4

Set the peeler upside-down and, using a pair of pliers, squeeze the hose clip and remove the peeler drain hose (Fig. 1). Replace this hose with the drain hose packed inside the peel trap.

The peeler may be positioned on the peel trap in one of four positions. Each of the positions will cause the peel trap drawer to be located in a different position relative to the discharge chute.

The peel trap drawer may be directly beneath the discharge chute, to the right, left or rear (see Fig. 5).

After selecting the most convenient position for the peel trap drawer, remove the cover disc from the appropriate hole in peel trap and position the peeler on top of the peel trap, with the peeler drain hose extending through selected hole (Fig. 5).

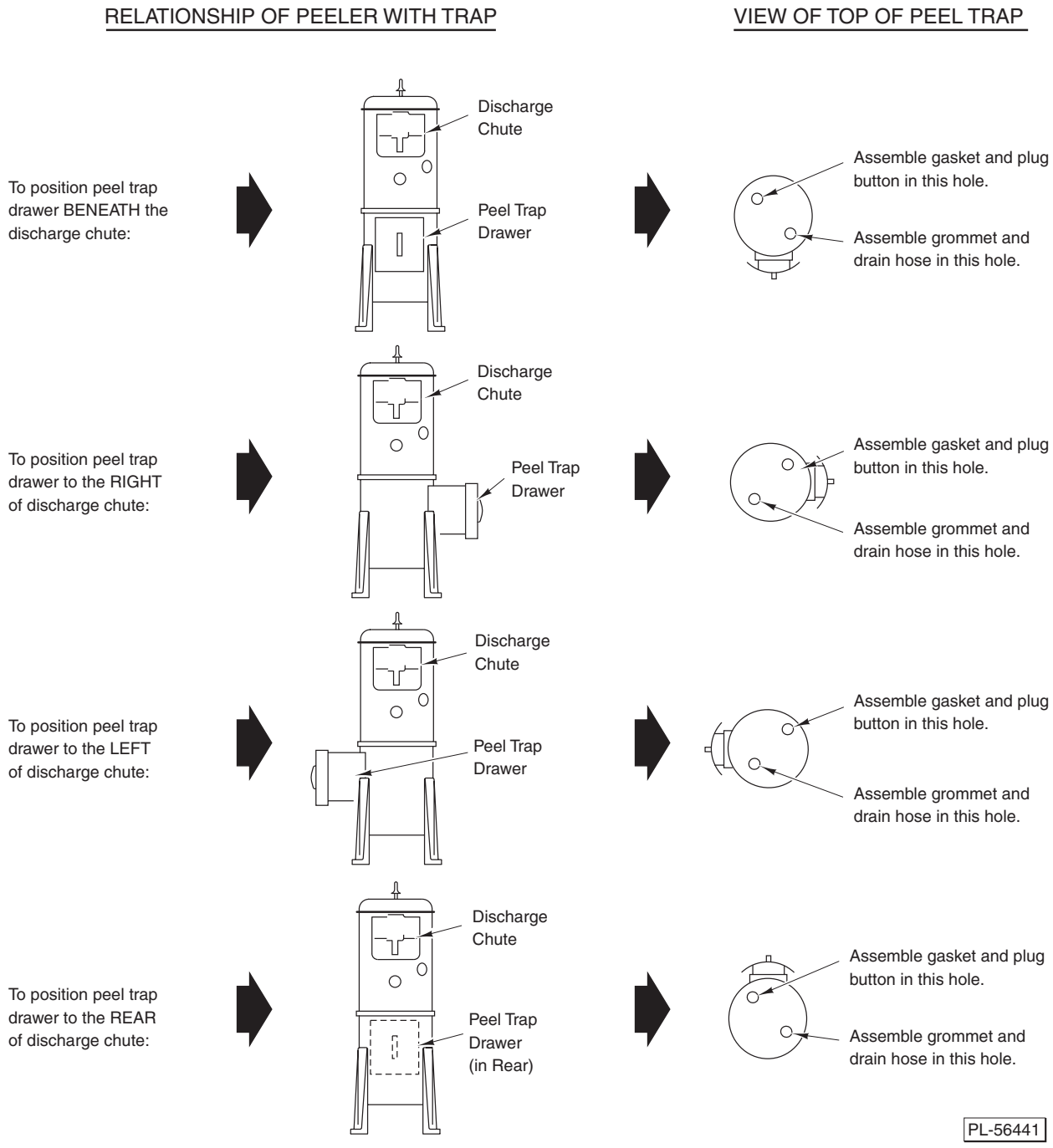

Fig. 5

The cloth bag shipped in peel trap drawer contains the four cap screws, lockwashers and washers (Fig. 4) for fastening the peeler to the peel trap.

CAUTION: Excessive tightening of screws may distort housing.

If desired, the peel trap legs may be bolted to the floor.

Attach the fill tube and bracket assembly (Fig. 1) to the peeler using the supplied acorn nuts and gasket (which are attached to the peeler for shipment).

PLUMBING (UNITS WITH PEEL TRAP)

WARNING: PLUMBING CONNECTIONS MUST BE INSTALLED TO COMPLY WITH THE APPLICABLE FEDERAL, STATE OR LOCAL PLUMBING CODES.

Fill Tube

The 1/2" coupling (Fig. 4) should be connected to the fill tube. This coupling is provided for a permanent cold water connection and replaces the rubber fill hose.

NOTE: A globe valve for controlling the water flow should be installed in the water supply line in a location convenient to the operator.

Drain

The peel trap is provided with a 2" drain connection (Fig. 4).

ELECTRICAL CONNECTIONS

Before making electrical connections, check the specifications on the data plate (Fig. 1) to ensure they agree with those of your electrical service.

WARNING: DISCONNECT THE ELECTRICAL POWER TO THE MACHINE AND FOLLOW LOCKOUT / TAGOUT PROCEDURES.

To move the timer to the opposite side of the discharge chute, simply remove the screws that attach the timer and cover plates. Interchange the timer and cover plates, and fasten each with the screws.

OPERATION

Where applicable, fit the rubber fill hose connector (Fig. 1) over any cold freshwater tap.

Position the hopper top (Fig. 1) in place on the peeler housing.

Close and latch the discharge chute door.

NOTE: The discharge chute door MUST always be left open when the unit is not in use.

Pour product into the hopper. There should be room in the hopper for product to move around while peeling. Do NOT overload the peeler. The capacity is 15 to 20 lb (7.0 to 9.0 kg) maximum.

Turn on water supply.

Set timer at the desired peeling time.

Peeling times will vary, depending on the type and condition of the product. When the desired degree of peeling has been reached, turn off the water. Place a container under the discharge chute to catch product and open the discharge chute door.

NOTE: When timer has expired, it will be necessary to reset the timer to allow enough time for product to discharge.

After the product has been completely discharged, turn off the timer. It is ready to repeat the operation.

If the peeler is equipped with a peel trap, it will be necessary to empty the peel trap drawer occasionally (after a few batches).

CLEANING

WARNING: DISCONNECT THE ELECTRICAL POWER TO THE MACHINE AND FOLLOW LOCKOUT / TAGOUT PROCEDURES.

The peeler should be cleaned after the peeling operation has been completed.

As soon as the peeling has been completed and BEFORE the hopper has had time to dry, turn on the water and flush the interior of hopper. Turn off the water.

Remove the hopper top and clean it in a sink.

Lift out the abrasive disc which is not fastened to the shaft, and scrub it with a brush and mild soap. Clean the housing beneath the abrasive disc with mild soap and water.

Turn on the water and thoroughly clean the interior of the hopper using a mild soap and a brush. Rinse thoroughly.

NOTE: If the abrasive disc should stick and is NOT easily removed, it may be loosened by removing the hex head screw on top of the hub and threading a longer screw (such as $^{5}/_{16}$"-18 x $^{1}/_{2}$") in until disc loosens.

To remove the lexan liner, unlatch the exterior latch on the outside of the hopper and push the keeper out of the hole (Fig. 3). Slide the liner out from under the retaining brackets. Take to the sink and scrub with a nonabrasive brush, using soap and water to clean. Allow to air dry before installing into the hopper.

If the drawer is equipped with a peel trap, remove the peel trap drawer and thoroughly clean the drawer, as well as the peel trap interior.

The discharge chute MUST be left open when unit is NOT in use to prolong life of the door seal.

MOTOR

This machine is equipped with a manual-reset overload protection switch, located on the outside of the hopper opposite the discharge chute. If, during operation, the motor should overheat and trip this switch, turn the timer off and allow the motor to cool for several minutes. To reset the switch, remove the top screw from the cover plate (Fig. 6), rotate the cover plate and push the red button (Fig. 6). Install round cover plate and screw onto potato peeler.

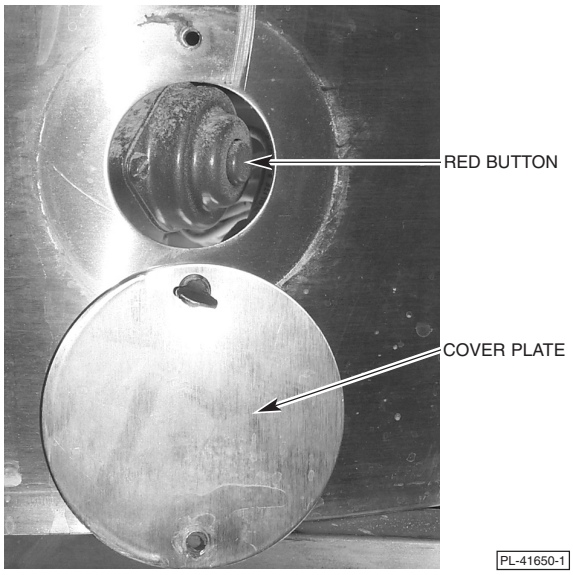

Fig. 6

If the overload protection switch persists in tripping, contact your local Hobart Service Office.

MAINTENANCE

LUBRICATION

The peeler uses sealed ball bearings and therefore requires no lubrication maintenance.

TROUBLESHOOTING

SYMPTOM	POSSIBLE CAUSE
Peeler won't operate.	Peeler is not plugged in.
	Circuit breaker tripped or fuse blown.
Excessive foaming.	Too much water in the hopper.
If the above suggestions do not remedy the situation, contact Hobart Service Office.	

SERVICE

Contact your local Hobart-authorized Service Office for any repairs or adjustments needed on this equipment.

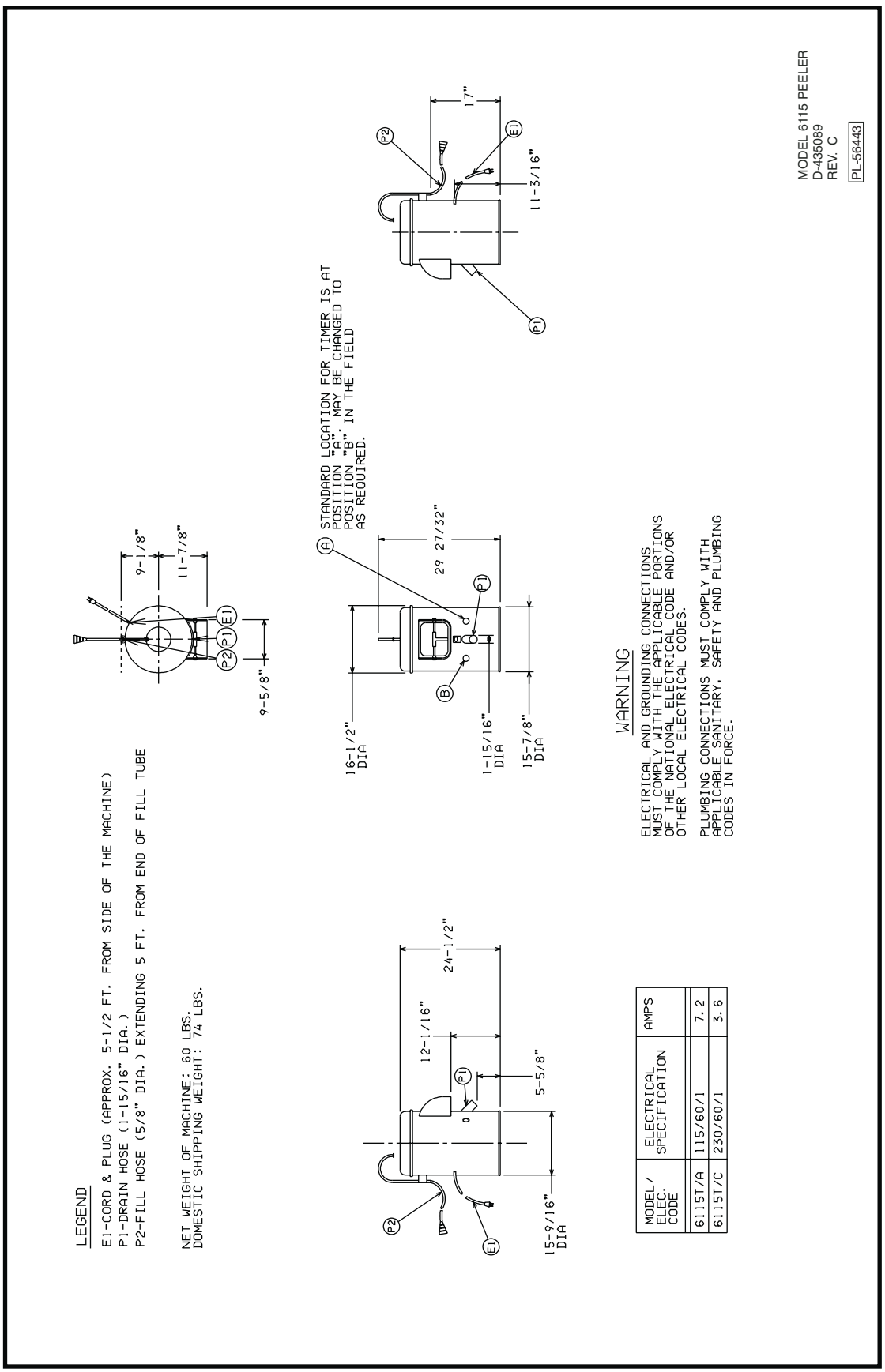

INSTALLATION DIAGRAM (WITH TRAP)

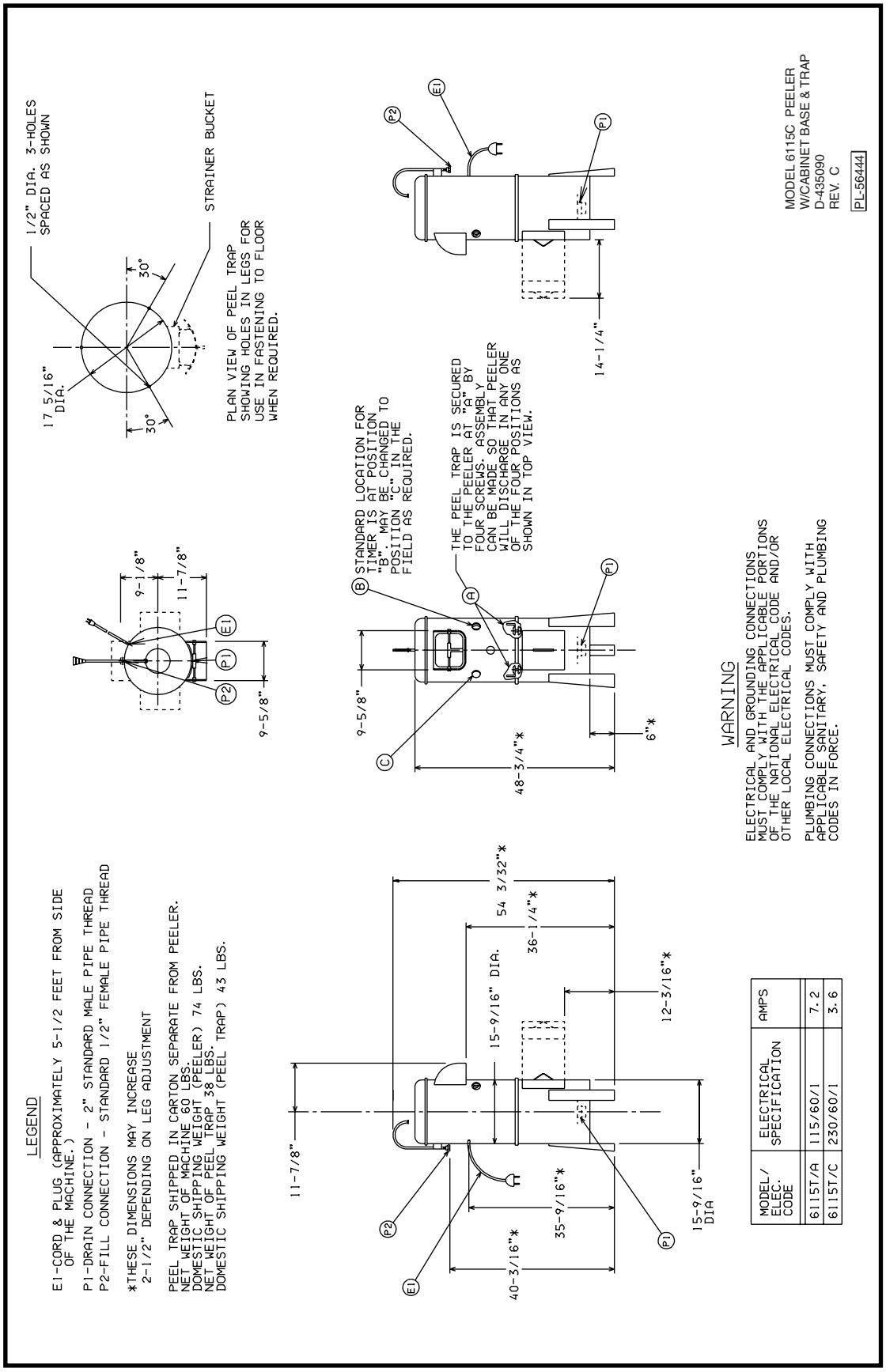

INSTALLATION DIAGRAM (WITHOUT TRAP)

NOTES

NOTES