HOBART

INSTRUCTION MANUAL

... with Replacement Parts

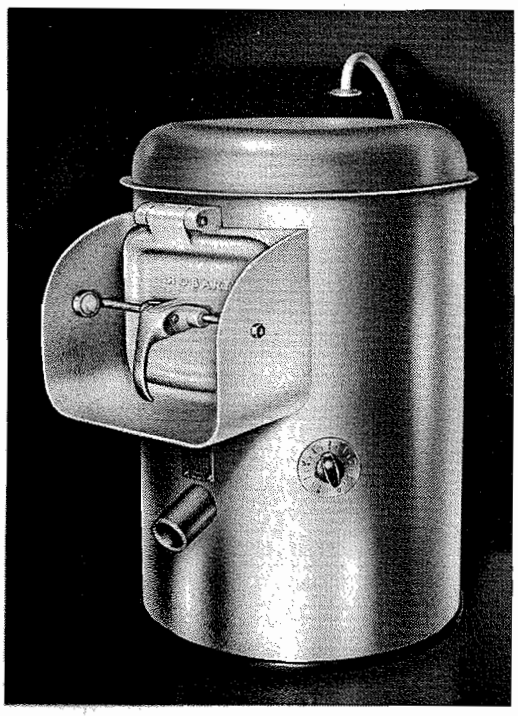

MODEL 6115 POTATO PEELER

ML-16944 6115
ML-16945 6115T

A product of HOBART CORPORATION TROY, OHIO 45374

FORM 10121E (Rev. 9-79) (Supsds. F. 10121D, 11-75)

Instructions for Unpacking, Operation and Care of MODEL 6115 POTATO PEELER

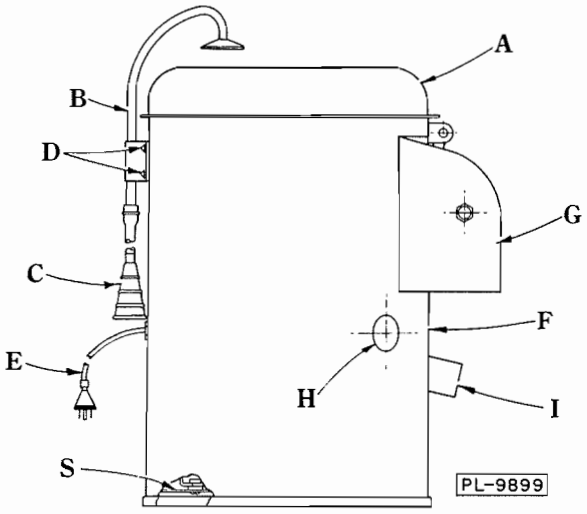

Fig. 1

INSTALLATION:

Remove the peeler, Fig. 1, from the shipping carton. The plastic molded hopper top (A) is inverted for shipping and should be removed. The fill tube and bracket assy. (B) and the fill hose (with clip) (C) are packed inside the hopper. Lay the machine over on chute and remove the bottom cover plate (S). REMOVE THE CORRUGATED PACKING between the motor and housing. Also, remove the packing between the two pulleys. Re-assemble the bottom cover plate (S) and set machine in upright position. Remove the four nuts (D), but leave gasket in place. Assemble the fill tube and bracket assembly (B). The fill tube, when assembled properly, allows the water to strike the edge of the hopper top (A), giving a fan shaped spray of water, which prevents upward splash from within the peeler. Assemble the fill hose (C) onto the fill tube; use pliers to depress the clip that retains the hose. A slight amount of soap or oil applied with finger tip to the end of the fill tube will aid in assembling the fill hose. The plastic hopper top (A) is easily snapped into place.

ELECTRICAL CONNECTION:

If a cord and plug is not used with this machine, electrical connections should be made by qualified workmen who will observe all applicable Safety Codes and the National Electrical Code. The peeler is equipped with a cord and plug (E) Fig. 1. Before plugging into socket, check the electrical specifications stamped on the name plate (F) to be sure they agree with those of the power supply.

TIMER:

The peeler is regularly equipped with a timer which is assembled on the right hand side of the chute (G) (Unless ordered for the left hand side). A switch as optional equipment is available in place of timer.

To operate the peeler with timer, simply set the time knob to the number of minutes (indicated on timer dial) desired for peeling. The timer knob can be set in either direction to the proper timing point on the dial. For counter-clockwise setting of time of less than one-half minute, turn knob beyond the one-half minute point and then back to the desired time.

The timer (or switch) is easily changed from the right hand side to the left hand side of the chute (or vice versa). To do this, first remove the timer knob by loosening set screw in the knob. Next, remove the three screws that retain the timer and dial. Lay the machine on its side and disassemble the hole cover (H) of the optional timer location by removing the retaining nut on the inside of the peeler housing. Re-assemble the timer, dial and knob in the new location. Re-assemble plug (H) in the hole from which the timer was removed.

DRAIN:

The peeler (Fig. 1) should be conveniently placed to suit the operator, such as on a counter top or sink drainboard. It is suggested that should the drain hose (I) be drained into a sink, a strainer basket should also be used to prevent clogging the sink drain. See Page 12 for strainer basket and clamping bracket.

WATER CONNECTION:

The flexible rubber fill hose (C) has a connector that fits over any fresh water tap and provides a water-tight connection.

OPERATION:

Put in the potatoes, turn on the water and start the motor. Do not overload. The rated capacity is fifteen to twenty pounds. There should be room in the hopper for potatoes to move about while peeling.

The time required for peeling depends upon the condition of the potatoes. The progress of the

work can be watched through the hopper, and when the desired degree of peeling has been reached, turn off the water and open the chute door at (G). The potatoes will be discharged through the chute; have a receptacle there to catch them. After the first (or trial) batch has been run, check the time required on the timer. Then, using this same timer setting, peel the balance of your potatoes. After the peeling operation is completed, allow the hopper door to remain unlatched; this prolongs the life of the door seal. Setting the latch stud for the door too tight, will also shorten the life of the door seal.

CLEANING:

As soon as the peeling is finished and before the hopper has had time to dry, lift off the hopper top (A) and clean out the inside with a hose. The abrasive disc is not fastened to its shaft and can be lifted out easily to permit cleaning the space underneath it. If the disc should stick and resist removal, take out the screw (J) (Fig. 2) and lift washer (K), then assemble a 5/16"-18 x 1" (approx.) long hex head screw into the tapped hole of the disc. Turn this screw until the disc is loosened.

If peel trap is used, stop after a few batches and empty contents of trap.

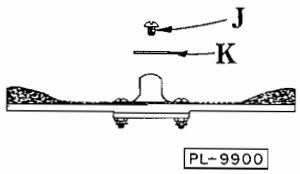

Fig. 2

BELT DRIVE:

The belt drive of this machine has a positive type belt adjustment which may be adjusted to give proper belt tension.

LUBRICATION:

The motor has grease sealed ball bearings which require no lubrication. The bearing carrier for the main drive shaft has oilless bearings, with cavities that are filled at the factory, which eliminate any need for further lubrication.

CABINET BASE AND TRAP (WHEN ORDERED):

This accessory unit is shipped in a separate carton and includes all the necessary parts for a permanent installation. The stainless steel cabinet base and trap is equipped with dual purpose legs that may be adjusted for leveling and various chute heights for the peeler.

The trap legs are removed for shipping purposes. The curved leg clamp bolts, gaskets, bolts, washers and nuts for attaching the legs are packed in a cloth bag. Use the following procedure for attaching each of the three legs:

1. Remove strainer bucket (1, Fig. 3).
2. Assemble rubber gasket (2, Fig. 3) on curved leg clamp bolt (3, Fig. 3) and assemble bolt through upper hole on inside of trap housing.
3. Bolt (3, Fig. 3) to extend through slot in leg and hole in leg slot cover (4, Fig. 3). Assemble stainless steel washer (5, Fig. 3) and acorn nut (6, Fig. 3).
4. Assemble one stainless steel washer (7, Fig. 3), then one lead washer (8, Fig. 3) on hex finish bolt (9, Fig. 3) through lower hole on inside of housing through leg slot, then hole in leg slot cover.
5. Assemble one stainless steel washer (10, Fig. 3) and acorn nut (11, Fig. 3) on finish bolt.
6. Adjust each leg height to suit, then tighten the six acorn nuts (6 & 11, Fig. 3).

For the permanently installed machine (with trap), permanent electrical connections are required. Cut off the cord, of the cord and plug (E) (Fig. 1) to a 6" (approx.) length from the peeler housing. Remove and discard the bottom cover plate (S). Attach the junction box (R) (Fig. 3) to the peeler housing.

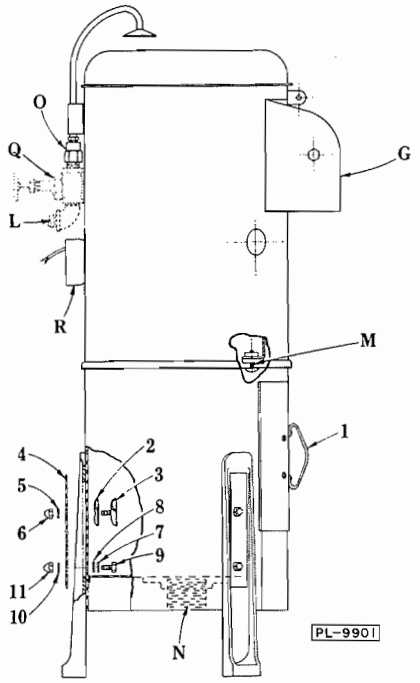

Fig. 3

Peeler with Cabinet Base and Trap

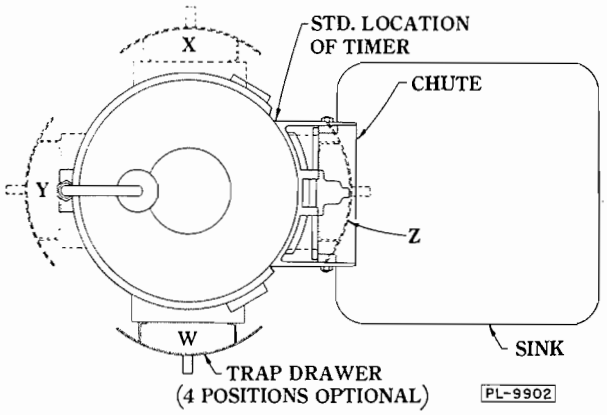

Fig. 4

NOTE: This junction box must be assembled before the peel trap is attached. See tag connected to junction box (R) (Fig. 3) for installation instructions. Connect with flexible or rigid conduit. Before attaching the peel trap to the peeler, decide on the location of the fill line (L) (Fig. 3), after deciding on position and relationship, to the peel trap drawer (see Fig. 4). The discharge chute and fill pipe have fixed positions on the peeler, but the relationship of the peel drawer may be changed to any one of four positions W, X, Y, and Z, Fig. 4. After deciding on position and relationship, attach the trap to the peeler as follows: Remove the fill tube & bracket assy. (B) (Fig. 1) and the hopper top (A) from the peeler, then lift out the abrasive disc. Invert the peeler and remove the standard drain hose (I). Use pliers to depress the special hose clip on the inside of the peeler housing. Plug standard drain hose opening in peeler housing with plug button. Attach the peel trap drain hose according to the trap drawer relationship as shown in Fig. 4, 5 or 7: i.e., to have a peel trap drawer location (W) (Fig. 4) in relation to chute, assemble hose in position (P-1)(Fig. 5) of peeler, next assemble grommet in hole (T-2) (Fig. 6) of trap and plug other hole in trap (T-1) (Fig. 6) with gasket and plug button. Using Fig. 4 as a guide follow this same method of assembly for a proper relationship between the peeler chute and trap drawer for all four positions; namely using Fig. 5 for 90° installations (W & X) and Fig. 7 for parallel installations (Y & Z).

Invert the peel trap over the peeler (without removing the rubber base ring) and attach with screws (M) (Fig. 3). Stand peeler with trap attached in upright position. The peel trap has a 2" pipe connection (N) for the drain. A 1/2" female pipe connection (O) (serves as a union) is provided for a permanent fresh water line. This replaces the rubber fill hose (C) (Fig. 1). It is recommended that a globe valve (Q) (Fig. 3) be installed in the fresh water line to regulate the flow of water. This valve should be in a convenient location to suit the operator of the machine.

MOTOR DRIVE UNIT:

This machine is equipped with a manual reset, overload protection switch. In case of overload allow motor to cool for 3-5 min. before attempting to restart. To reset switch, remove inspection plate beside electrical cord and depress red button located on top of motor.

To disassemble the drive or power unit on the peel trap model (Fig. 3), disconnect the electrical connections (R) and the fresh water line (L). Then remove the four screws (M) and lift the peeler from the cabinet base and peel trap.

After the peel trap is disconnected, lift out the abrasive disc. Next, remove the three screws under the disc. Lay the peeler over on its side and disconnect the belt adjustment rod. The complete motor drive unit may then be removed from the bottom of the machine.

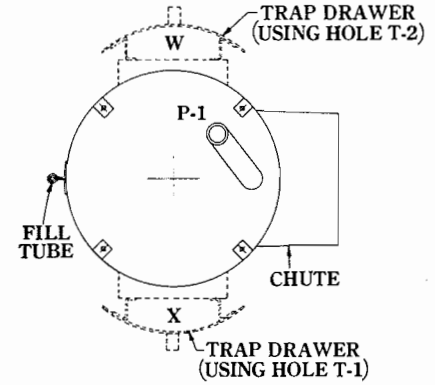

BOTTOM VIEW OF PEELER
(TRAP DRAWER 90° FROM CHUTE)

Fig. 5

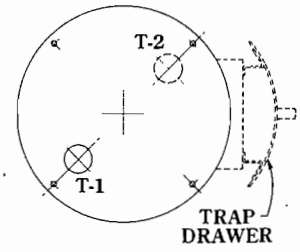

TOP VIEW OF
PEEL TRAP

Fig. 6

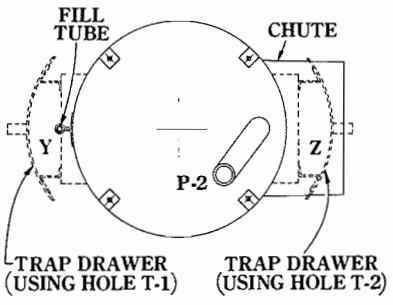

BOTTOM VIEW OF PEELER
(TRAP DRAWER PARALLEL WITH CHUTE)

PL-9903

Fig. 7

WARNING

ELECTRICAL AND GROUNDING CONNECTIONS MUST COMPLY WITH THE NATIONAL ELECTRICAL CODE AND/OR OTHER LOCAL ELECTRICAL CODES IN FORCE.

WARNING

PLUMBING CONNECTIONS MUST COMPLY WITH APPLICABLE SANITARY, SAFETY AND PLUMBING CODES IN FORCE.

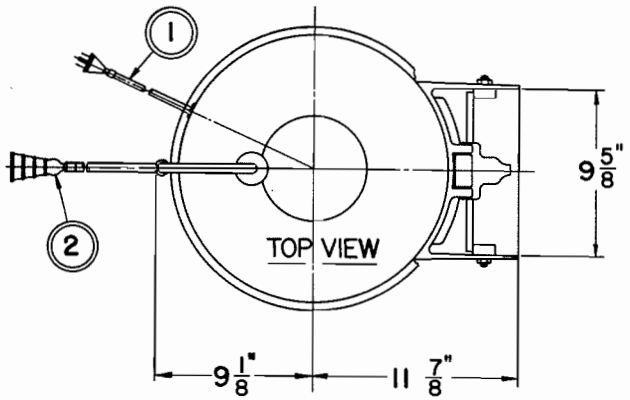

STANDARD LOCATION FOR TIMER (OR SWITCH AS ORDERED) IS AT POSITION "A". MAY BE CHANGED TO POSITION "B" IN FACTORY OR FIELD AS REQUIRED.

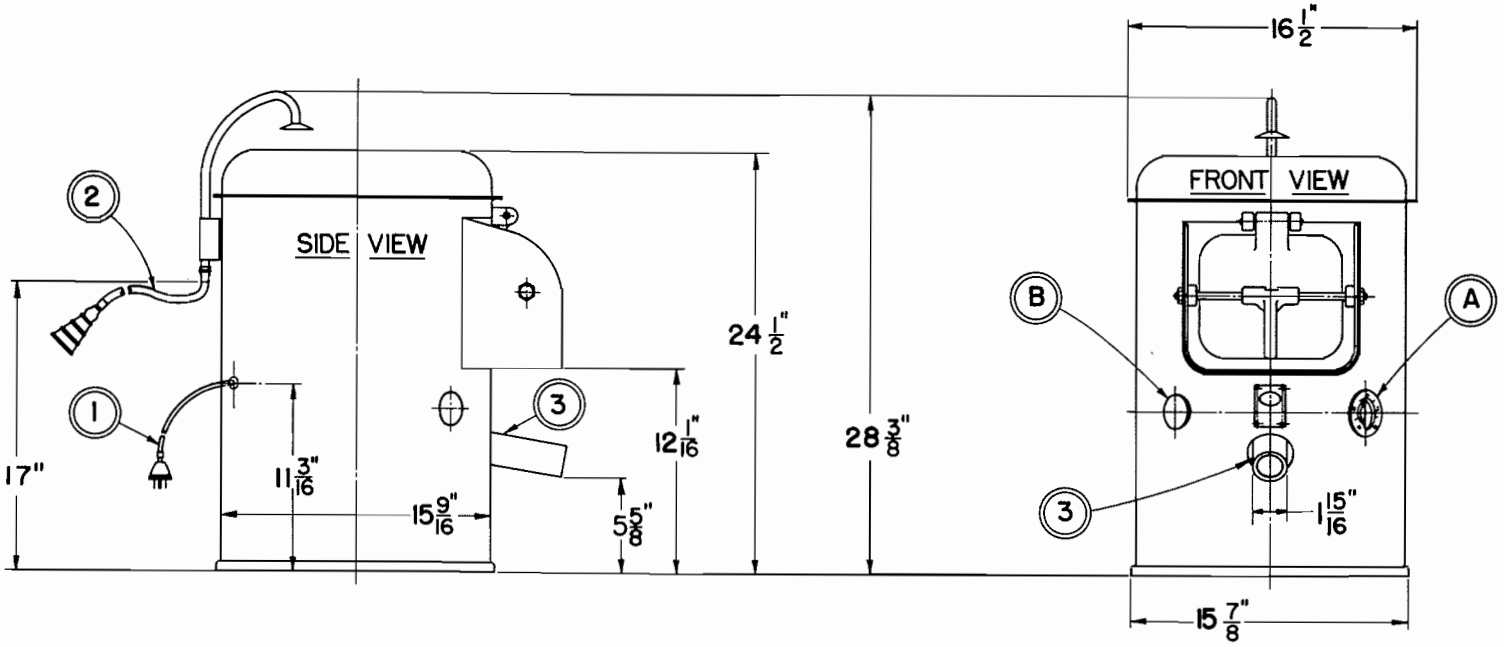

1	CORD & PLUG (APPROX. 5 ½ FT. FROM SIDE OF THE MACHINE)
2	FILL HOSE (5/8" DIA.) EXTENDING 5 FT. FROM END OF FILL TUBE
3	DRAIN HOSE (1 15/16" DIA.)

PL-16718

S-63535

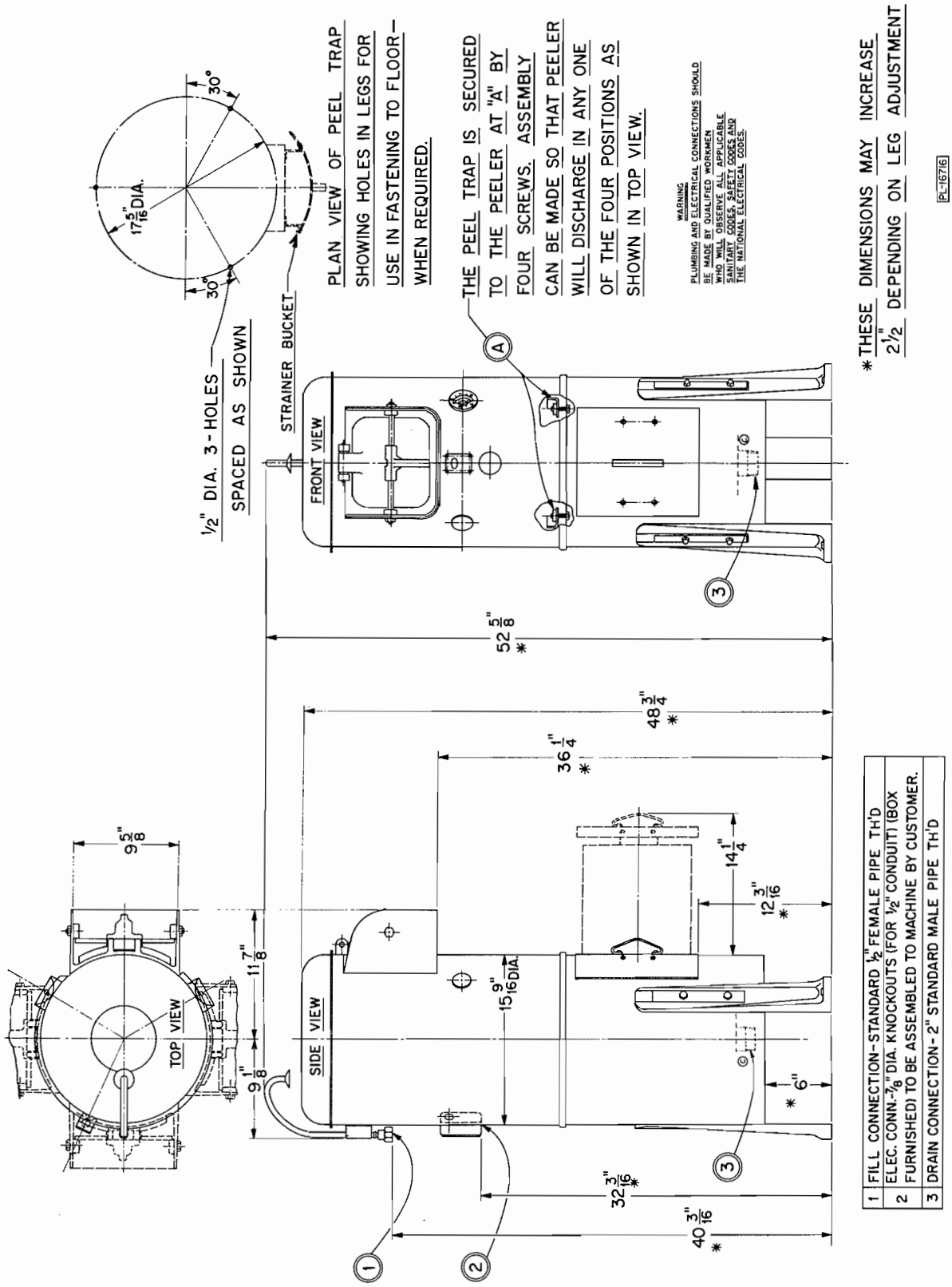

INSTALLATION DIAGRAM (WITH TRAP)

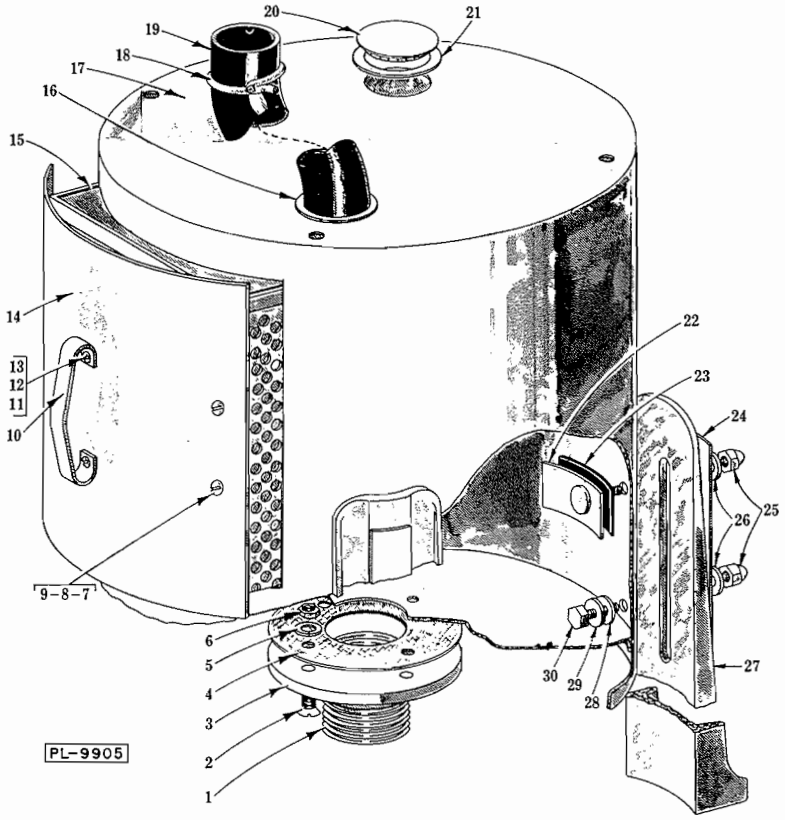

PEEL TRAP UNIT
ML-16952-Z

ILLUS. PL-9905	PART NO.	NAME OF PART	AMT.
1	FP-39-68	Nipple - 2" x 2-1/4" Lg. (T.B.E.)	1
2	SC-22-46	Mach. Screw - 5/16"-18 x 7/8" Flat Hd	4
3	P-62565	Flange - Peel Trap	1
4	P-62606	Gasket - Flange	1
5	WL-6-22	Lock Washer - 5/16" Light	4
6	NS-15-11	Full Nut - 5/16"-18 Hex Fin	4
7	SC-21-22	Mach. Screw - #10-24 x 3/8" Rd. Hd	4
8	WL-6-6	Lock Washer - #10 Light	4
9	NS-11-18	Mach. Nut - #10-24 Hex	4
10	P-111303-2	Handle - Door Strainer	1
11	SC-21-22	Mach. Screw - #10-24 x 3/8" Rd. Hd	2
12	WL-6-6	Lock Washer - #10 Light	2
13	NS-11-18	Mach. Nut - #10-24 Hex	2
14	R-62578	Door - Strainer	1
15	S-62585	Strainer Bucket Sub-Assy	1
16	M-64877	Grommet - Drain Hose	1
17	T-77798	Peel Trap Housing Assy	1
18	M-63300	Clamp - Hose	1
19	R-63273	Hose - Drain (Peel Trap)	1
20	PB-2-37	Plug Button	1
21	M-64953	Gasket - Plug Button	1
22	M-77620	Inside Leg Clamp and Bolt Assy	3
23	M-62601-2	Gasket - Leg Screw	3
24	P-77619	Cover - Leg Slot	3
25	NS-25-16	Acorn Nut - 3/8"-16	6
26	WS-6-44	Washer	6
27	S-77618	Leg - Peel Trap	3
28	WS-6-13	Washer (Lead)	3
29	WS-6-44	Washer	3
30	SC-41-28	Fin. Bolt - 3/8"-16 x 3/4" Hex Hd	3
	S-63213	Strainer Bucket & Door Assy. (Incls. items #7 thru 15)	1

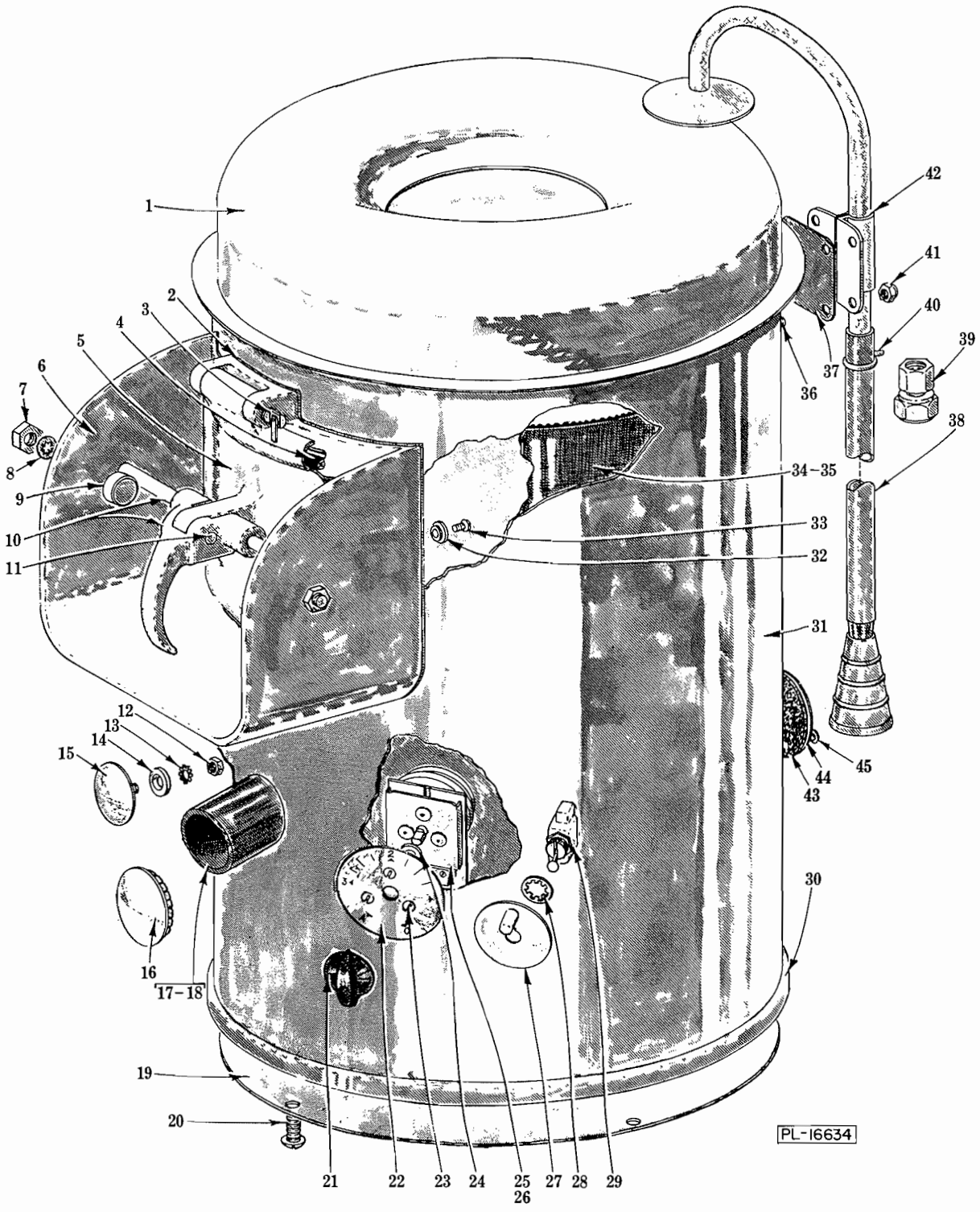

HOUSING UNIT

HOUSING UNIT

ILLUS. PL-16634	PART NO.	NAME OF PART	AMT.
1	S-63551	Top - Hopper	1
2	R-62387	Gasket - Chute Housing	1
3	P-78153-2	Door Hinge Pin Assy	1
4	M-62372-1	Seal - Chute Door	1
5	A-102826	Door & Seal Assy. (Incls. item #4)	1
6	S-64219	Chute - Housing	1
7	NS-18-6	Jam Nut - 5/16"-18 Hex Fin	2
8	WL-8-22	Lock Washer - 5/16" Int. Shakeproof	2
9	M-64200-1	Stud - Latch	2
10	P-62384	Door Handle & Locking Shafts Assy	1
11	M-62382	Pin - Door Handle Hinge	1
12	NS-9-22	Mach. Nut - #10-24 Hex	1
13	WL-10-6	Lock Washer - #10 Ext. Shakeproof	1
14	M-63214	Washer - Hole Cover	1
15	M-63215	Timer Hole Cover & Screw Assy	1
16	PB-2-37	Plug Button (Use with Peel Trap Only)	1
17	M-63300	Clamp - Hose	1
18	P-69642	Hose - Drain	1
19	R-64351	Cover - Bottom Plate	1
20	SC-53-17	Mach. Screw - 5/16"-18 x 3/4" Truss Hd	4
**21	M-63268	Knob - Timer	1
**22	P-63206	Dial - Timer	1
**23	SC-19-11	Mach. Screw - #8-32 x 3/8" Bind. Hd	3
**24	WS-3-25	Washer	1
**25	B-103028-1	Timer (115 V.)	1
**26	B-103028-2	Timer (230 V., 60 Hz.; 220 V., 50 Hz.)	1
*27	B-124555	Switch Plate Assy	1
*28	WL-8-32	Lock Washer - 1/2" Int. Shakeproof	1
29	P-87711-103-1	Switch (Machine less Timer)	1
30	R-62635	Base - Rubber	1
31	S-62395	Housing & Rubber Liner Assy. (Incls. items #34 & 35)	1
32	M-64782	Washer - Rubber Liner Retaining	10
33	SC-25-7	Mach. Screw - #10-24 x 5/16" Bind. Hd	11
34	P-64834	Liner - Rubber (R.H.)	1
35	P-64835	Liner - Rubber (L.H.)	1
36	SC-25-8	Mach. Screw - #10-24 x 3/8" Bind. Hd	4
37	M-63294	Gasket - Fill Assy	1
38	P-63456	Hose - Fill	1
39	M-79404-1	Coupling (1/2" Female Pipe x 1/2" Tube) (Use with Peel Trap ONLY)	1
40	M-632424	Clamp - Hose	1
41	NS-25-1	Acorn Nut - #10-24 Hex	4
42	P-64350	Fill Tube & Brkt. Assy	1
43	C-124529	Gasket - Reset Cover	1
44	C-124526	Cover - Reset Button	1
45	SD-8-20	Self-Tapping Screw - #8 x 1/4" Bind. Hd., Type B	2
	M-64220	Chute & Door Sub-Assy. (Incls. items #1 thru 3 & 5 thru 11)	1

*6115.
**6115T.

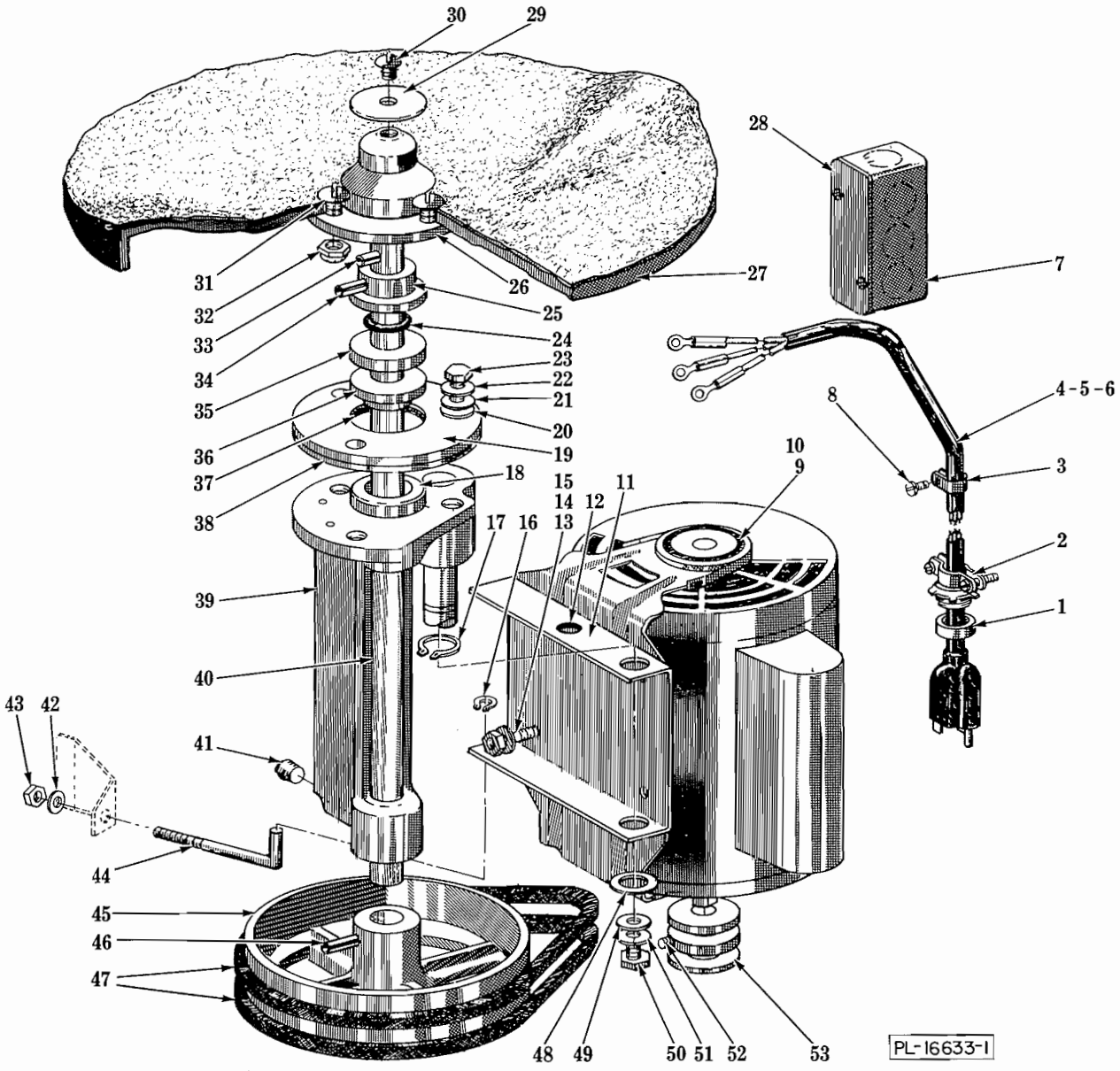
30
29
28
31
32
33
34
35
36
37
38
26
27
25
24
23
22
21
20
19
18
7
8
4-5-6
3
10
9
15
14
12
11
17
16
13
2
1
39
40
43
42
41
44
45
46
47
48
49
50
51
52
53
PL-16633-1

DRIVE UNIT

DRIVE UNIT

ILLUS. PL-16633-1	PART NO.	NAME OF PART	AMT.
1	M-15898-3	Nut - Connector (3 Wire Cord)	1
2	FE-2-45	Connector - 1/2" Cord	1
3	M-78752-3	Clamp - Cord & Plug	1
4	B-117542-6	Cord & Plug Assy. (3 Cond., Under 115 V.)	1
5	B-117542-11	Cord & Plug Assy. (3 Cond., 200-250 V.)	1
6	B-117542-16	Cord Assy. (I.E.C.)	1
7	FE-3-9	Box - Junction (With Peel Trap)	1
8	SC-7-33	Mach. Screw - #8-32 x 3/8" Rd. Hd	1
9	D-278187-1	Motor (115/230 V., 60 Hz., 1 Ph.)	1
10	D-278187-2	Motor (115/220 V., 50 Hz., 1 Ph.)	1
11	A-290029	Motor Sub-Base & Grommet Assy. (Incls. item #12)	1
12	M-63278	Grommet - Sub-Base	1
13	SC-37-83	Fin. Bolt - 5/16"-18 x 5/8" Hex Hd	4
14	WL-3-44	Lock Washer - 5/16" Medium	4
15	NS-13-14	Full Nut - 5/16"-18 Hex Fin	4
16	RR-7-10	Retaining Ring	1
17	RR-4-18	Retaining Ring	1
18	M-62371	Bearing - Main Drive Shaft	2
19	P-63208	Plate - Retaining	1
20	WS-4-23	Washer (Lead)	3
21	WS-4-21	Washer	3
22	WL-6-23	Lock Washer - 5/16" Medium	3
23	SC-41-12	Fin. Bolt - 5/16"-18 x 7/8" Hex Hd	3
24	D-67500-9	"O" Ring	1
25	M-62369	Flange - Drive	1
26	P-62344	Hub - Abrasive Wheel	1
27	R-62630	Abrasive Wheel & Hub Assy. (Incls. items #26, 29, 30, 31 & 32)	1
28	FE-4-11	Cover - Junction Box (With Peel Trap)	1
29	WS-5-34	Washer	1
30	SC-9-94	Mach. Screw - 5/16"-18 x 3/8" Rd. Hd	1
31	SC-10-29	Mach. Screw - 5/16"-18 x 1-1/4" Truss Hd	4
32	NS-32-13	Stop Nut - 5/16"-18 "Flexloc"	4
33	RP-2-20	Rollpin - 5/16" Dia. x 1-3/8" Lg	1
34	RP-2-18	Rollpin - 1/4" Dia. x 1-1/4" Lg	1
35	M-62367	Seal - Graphitar	1
36	M-62368	Flange - Seal	1
37	D-67500-18	"O" Ring	1
38	M-64722	Gasket - Bearing Carrier	1
39	P-63260	Bearing Carrier & Pivot Shaft Sub-Assy. (Incls. item #18)	1
40	P-62370	Shaft - Main Drive	1
41	FP-28-1	Plug - 1/8" Sq. Hd. Pipe	2
42	WS-17-8	Washer	1
43	NS-32-12	Full Nut - 5/16"-18 "Flexloc"	1
44	M-77987-2	Tightener - Belt	1
45	P-63207	Pulley - Driven	1
46	RP-2-19	Rollpin - 3/16" Dia. x 1-3/8" Lg	1
47	P-63267	"V" Belt (Order In Pairs Only)	2
48	WS-10-36	Washer	1
49	WS-3-45	Washer	1
50	SC-36-14	Fin. Bolt - 1/4"-20 x 1/2" Hex Hd	1
51	WL-3-38	Lock Washer - 1/4" Medium	1
52	SC-47-26	Set Screw - 1/4"-28 x 3/8" Soc. Hd., Cup Pt	1
53	M-62670	Pulley - Motor	1

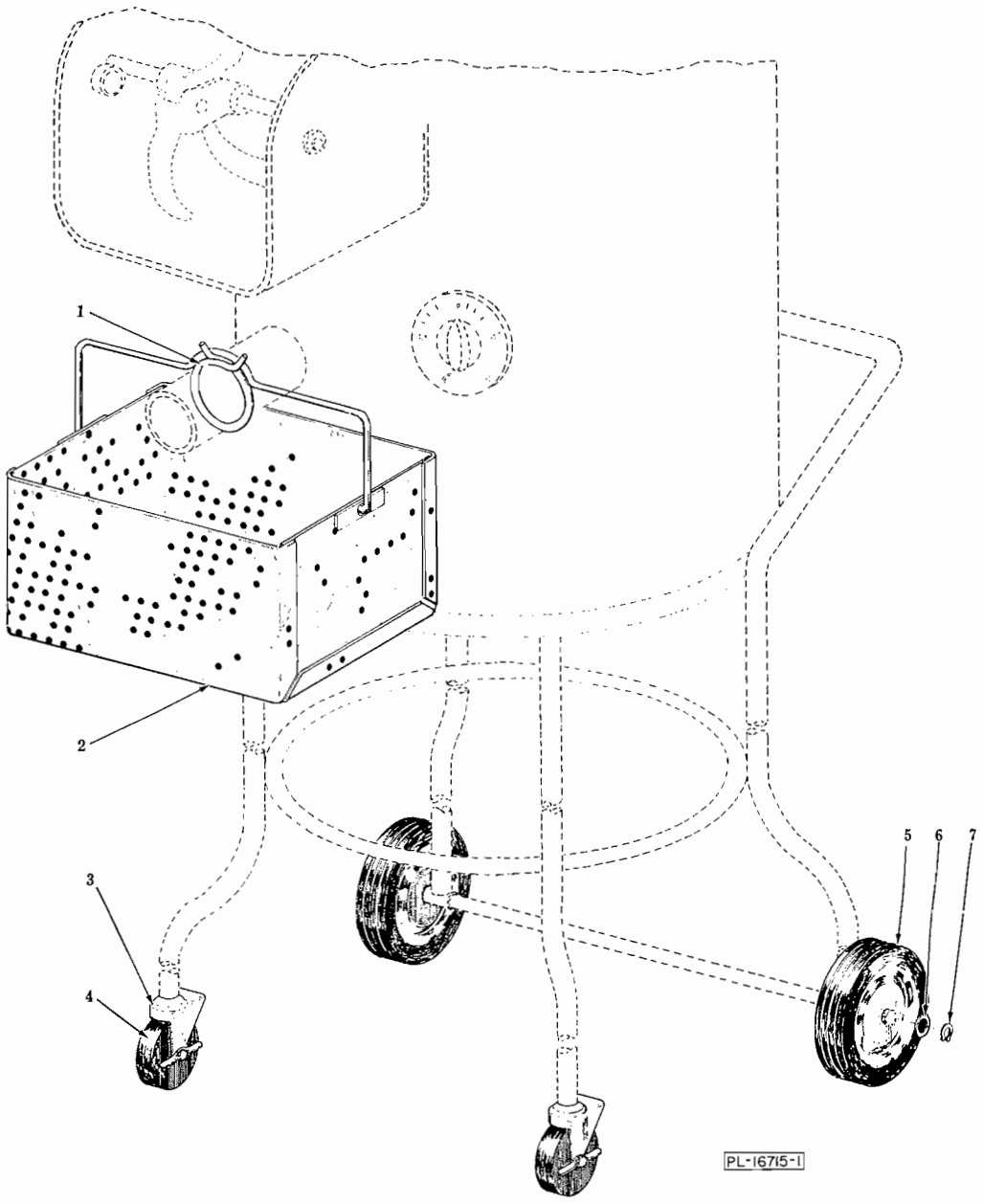

PORTABLE STAND AND BASKET

ILLUS. PL-16715-1	PART NO.	NAME OF PART	AMT.
1	M-80704	Clamp - Hose	1
2	R-69562	Basket Assy. (Peel Trap)	1
3	T-68881-15	Socket - Caster	2
4	T-68881-14	Caster - Front	2
5	T-68881-13	Wheel - Rear	2
6	WS-8-9	Washer	2
7	RR-10-12	Retaining Ring	2