HOBART

# CATALOG OF REPLACEMENT PARTS



## MODEL 6115 POTATO PEELER

**ML-137600**
**ML-137601**

**PRIOR MLS COVERED IN THIS CATALOG**

**ML-19869**
**ML-19683**

**A product of HOBART 701 S. RIDGE AVENUE TROY, OHIO 45374-0001**

**FORM 43064 Rev. F (March 2021)**

 © HOBART 2021

## Table of Contents

5 HOUSING UNIT
7 DRIVE UNIT
11 PEEL TRAP UNIT (ML-16952-Z)
13 LINER
15 PORTABLE STAND AND BASKET

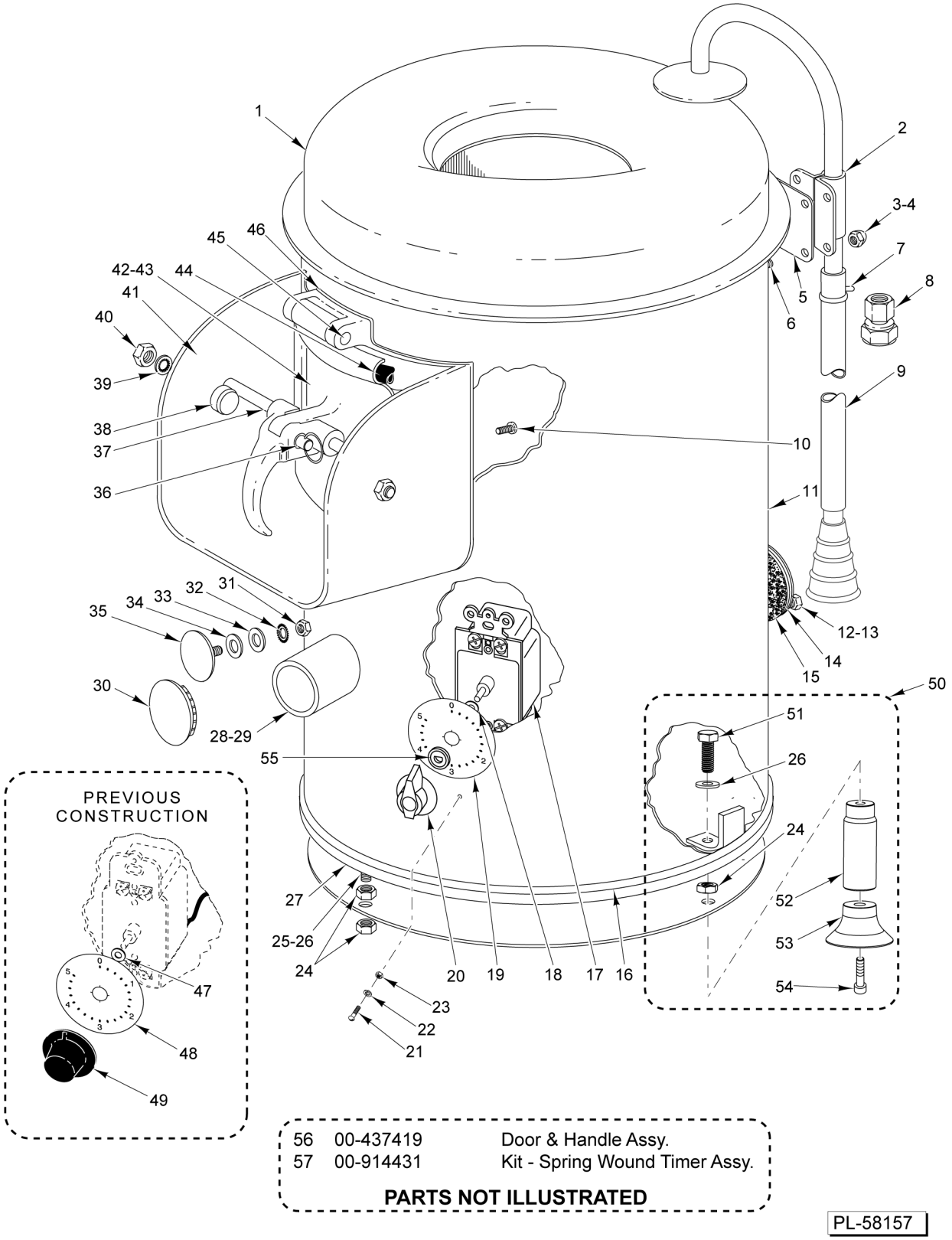


| | | |
|---|---|---|
| 56 | 00-437419 | Door & Handle Assy. |
| 57 | 00-914431 | Kit - Spring Wound Timer Assy. |

**PARTS NOT ILLUSTRATED**

PL-58157

## HOUSING UNIT

## HOUSING UNIT

| ILLUS. PL-58157 | PART NO. | NAME OF PART | AMT. |
|---|---|---|---|
| 1 | 00-891514 | Top - Hopper | 1 |
| 2 | 00-064350 | Fill Tube & Bracket Assy | 1 |
| 3 | NS-025-01 | Crown Nut 10-24 (SST) | 4 |
| 4 | WS-002-30 | Washer, Fiber | AR |
| 5 | 00-063294 | Gasket - Fill Assy | 1 |
| 6 | SC-025-07 | Mach. Screw 10-24 x 5/16 Slotted Bndg. Hd. (SST) | 4 |
| 7 | 00-063242 | Clamp - Hose | 1 |
| 8 | 00-079404-00001 | Coupling (1/2 In. Female Pipe x 1/2 In. Tube) (Use With Peel Trap Only) | 1 |
| 9 | 00-063456 | Hose - Fill | 1 |
| 10 | SC-025-07 | Mach. Screw 10-24 x 5/16 Slotted Bndg. Hd. (SST) | 11 |
| 11 | 00-891504 | Housing Assy | 1 |
| 12 | 00-070641-00018 | Thumb Screw | 2 |
| 13 | NS-031-08 | Stop Nut 8-32 Special (SST) | 1 |
| 14 | 00-124526 | Cover - Reset Button | 1 |
| 15 | 00-124529 | Gasket - Reset Cover | 1 |
| 16 | 00-062635-00001 | Base - Rubber | 1 |
| *17 | 00-891510 | Timer - Spring Wound (Intermatic) (Incls. Item 20) | 1 |
| 18 | WS-003-25 | Washer | 1 |
| 19 | 00-914432 | Dial - Adhesive (6430/6460) (Current Construction) | 1 |
| 20 | 00-891509 | Knob - Timer (Current Construction) | 1 |
| 21 | SC-021-08 | Mach. Screw 6-32 x 3/8 Slotted Rd. Hd. (SST) | 2 |
| 22 | WL-014-03 | Lockwasher #6 External (SST) | 2 |
| 23 | NS-011-07 | Nut 6-32 Hex (SST) | 2 |
| 24 | NS-018-06 | Jam Nut 5/16-18 Hex (SST) | 8 |
| 25 | SC-041-10 | Cap Screw 5/16-18 x 5/8 Hex Hd. (SST) | 4 |
| 26 | WS-017-08 | Washer (0.328 x 0.625 x 0.062) (SST) | 4 |
| 27 | 00-064351 | Cover - Bottom Plate | 1 |
| 28 | 00-538412 | Clamp - Hose | 1 |
| 29 | 00-069642 | Hose - Drain | 1 |
| 30 | 00-291592 | Plug - Button (2 In.) (Use With Peel Trap Only) | 1 |
| 31 | NS-009-22 | Nut 10-24 Hex | 1 |
| 32 | WL-010-06 | Lockwasher #10 External Shakeproof | 1 |
| 33 | WS-018-09 | Washer | 1 |
| 34 | WS-022-16 | Washer | 1 |
| 35 | 00-063215 | Timer Hole Cover & Screw Assy | 1 |
| 36 | 00-292011-00004 | Pin - Lock | 1 |
| 37 | 00-437454 | Door Handle - Locking Assy | 1 |
| 38 | 00-064200-00002 | Stud - Latch | 2 |
| 39 | WL-008-22 | Lockwasher 5/16 Internal Shakeproof | 2 |
| 40 | NS-018-06 | Jam Nut 5/16-18 Hex (SST) | 2 |
| 41 | 00-064219 | Chute - Housing | 1 |
| 42 | 00-078145 | Bushing - Chute Door | 1 |
| 43 | 00-102826 | Door & Seal Assy | 1 |
| 44 | 00-062372-00001 | Seal - Chute Door | 1 |
| 45 | 00-292011-00002 | Pin - Lock | 1 |
| 46 | 00-062387 | Gasket - Chute Housing | 1 |
| 47 | WS-003-25 | Washer | 1 |
| 48 | 00-063206 | Dial - Timer (Previous Construction) | 1 |
| 49 | 00-291748 | Knob - Timer (Previous Construction) | 1 |
| 50 | 00-937924 | Kit - Leg (Incls. Items 51 thru 54) | 4 |
| 51 | SC-041-12 | Cap Screw 5/16-18 x 7/8 Hex Hd. (SST) | 4 |
| 52 | 00-937923 | Leg Assy. (Incls. Items 53 & 54) | 4 |
| 53 | 00-914835 | Foot - Base | 4 |
| 54 | 00-968067 | Screw - Button Hd. Torq W/Patch (5/16-18 x 1.0) | 4 |
| 55 | 00-915647 | Grommet - Timer (Starting S/N 56-1337-423) | 1 |
| 56 | 00-437419 | Door & Handle Assy. (Incls. Items 36, 37, & 43) | 1 |
| 57 | 00-914431 | Kit - Spring Wound Timer Assy. (Incls. Items 17, 19, 21, 22, & 23) | 1 |

* On Machines Built Before March 7, 2006, Order 00-914431

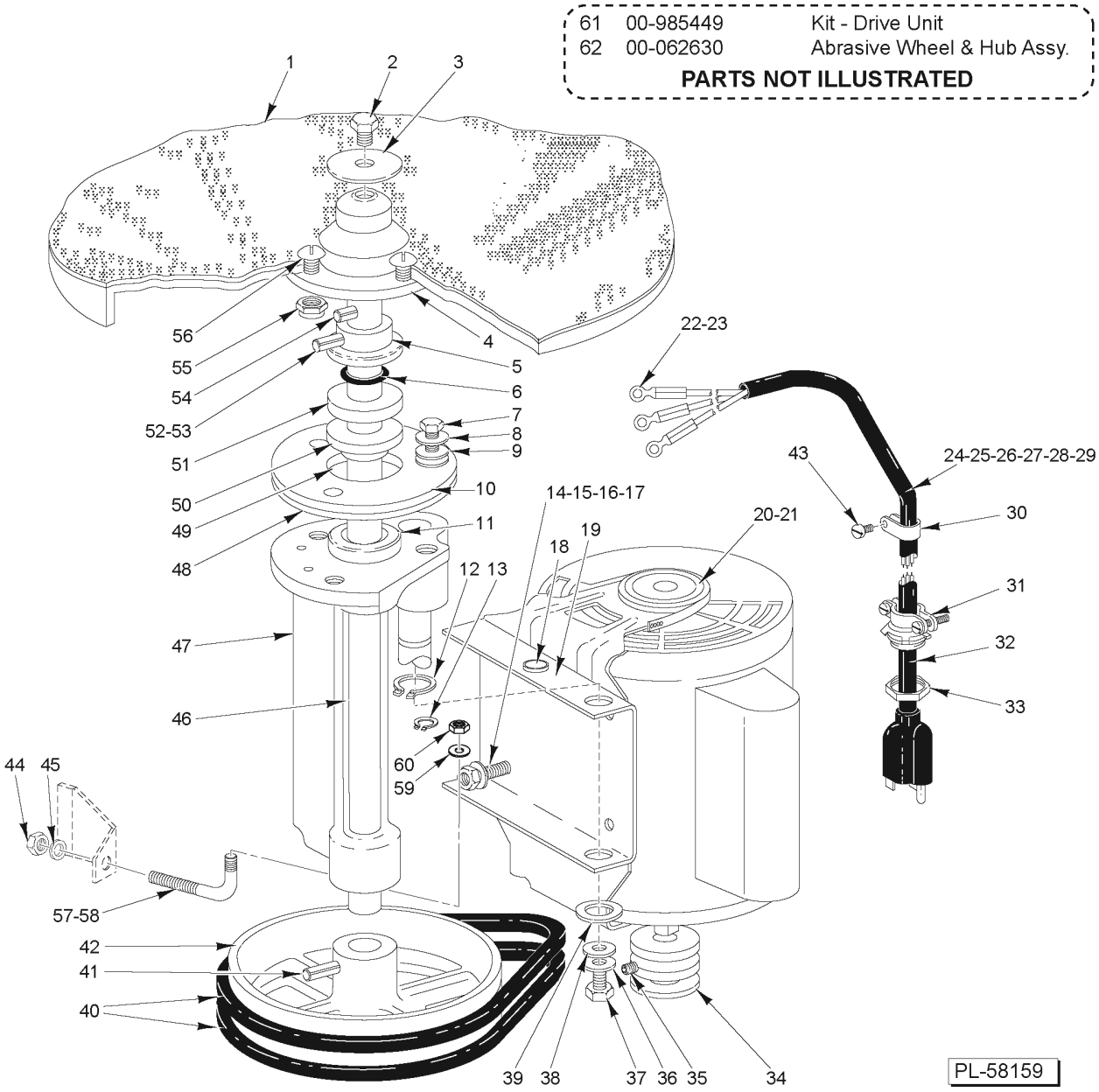
61 00-985449 Kit - Drive Unit
62 00-062630 Abrasive Wheel & Hub Assy.
PARTS NOT ILLUSTRATED
1
2
3
4
5
6
7
8
9
10
11
12 13
14-15-16-17
18
19
20-21
22-23
24-25-26-27-28-29
30
31
32
33
34
35
36
37
38
39
40
41
42
43
44 45
46
47
48
49
50
51
52-53
54
55
56
57-58
59
60
PL-58159

**DRIVE UNIT**

## DRIVE UNIT

| ILLUS. PL-58159 | PART NO. | NAME OF PART | AMT. |
|---|---|---|---|
| 1 | 00-117105 | Abrasive Wheel | 1 |
| 2 | SC-067-23 | Mach. Screw 5/16-18 x 3/8 Hex Hd | 1 |
| 3 | 00-070706-00002 | Washer - Sealer | 1 |
| 4 | 00-291252 | Hub - Abrasive Wheel | 1 |
| 5 | 00-875019 | Flange - Drive | 1 |
| 6 | 00-067500-00009 | O-Ring | 1 |
| 7 | SC-041-12 | Cap Screw 5/16-18 x 7/8 Hex Hd. (SST) | 3 |
| 8 | WL-006-23 | Lockwasher 5/16 Helical (SST) | 3 |
| 9 | WS-004-21 | Washer, Brass | 3 |
| 10 | 00-938673 | Plate, Retaining | 1 |
| 11 | 00-108394-00046 | Sleeve - Bearing | 2 |
| 12 | RR-004-18 | Retaining Ring | 1 |
| 13 | RR-007-10 | Retaining Ring (Previous Construction) | 1 |
| 14 | SC-037-85 | Cap Screw 5/16-18 x 1 Hex Hd | 4 |
| 15 | WL-003-44 | Lockwasher 5/16 Helical | 4 |
| 16 | NS-013-14 | Nut 5/16-18 Hex | 4 |
| 17 | WS-017-08 | Washer (0.328 x 0.625 x 0.062) (SST) | 4 |
| 18 | FE-022-43 | Bushing - Electric Snap | 1 |
| 19 | 00-290027 | Motor Sub-Base | 1 |
| 20 | 00-278187-00001 | Motor (115/230 V., 60 Hz., 1 Ph.) | 1 |
| 21 | 00-278187-00002 | Motor (115/220 V., 50 Hz., 1 Ph.) | 1 |
| 22 | SC-007-33 | Mach. Screw 8-32 x 3/8 Slotted Rd. Hd | 1 |
| 23 | WL-008-07 | Lockwasher #8 Internal Shakeproof | 1 |
| 24 | 00-117542-00092 | Cord & Plug Assy. (3 Cond., 125 V.) (Previous Construction) | 1 |
| 25 | 00-117542-00093 | Cord & Plug Assy. (Previous Construction) | 1 |
| 26 | 00-117542-00094 | Cord Assy. (Previous Construction) | 1 |
| 27 | 00-117542-00108 | Cord & Plug Assy. (3 Cond., 125 V.) (Current Construction) | 1 |
| 28 | 00-117542-00109 | Cord & Plug Assy. (Current Construction) | 1 |
| 29 | 00-117542-00107 | Cord Assy. (Current Construction) | 1 |
| 30 | 00-078752-00003 | Clamp - Cable (Cord & Plug) | 1 |
| 31 | FE-002-27 | Connector 1/2 Cord | 1 |
| 32 | FE-026-33 | Relief - Strain | 1 |
| 33 | FE-006-05 | Lock Nut 1/2 | 1 |
| 34 | 00-062670 | Pulley - Motor | 1 |
| 35 | SC-047-26 | Set Screw 1/4-28 x 3/8 Soc. Hd., Cup Pt | 1 |
| 36 | WL-003-38 | Lockwasher 1/4 Helical | 1 |
| 37 | SC-036-14 | Cap Screw 1/4-20 x 1/2 Hex Hd | 1 |
| 38 | WS-003-45 | Washer | 1 |
| 39 | WS-010-36 | Washer | 1 |
| 40 | 00-063267 | V-Belt (Order in Pairs Only) | 2 |
| 41 | RP-002-19 | | 1 |
| 42 | 00-063207 | Pulley - Driven | 1 |
| 43 | SC-007-33 | Mach. Screw 8-32 x 3/8 Slotted Rd. Hd | 1 |
| 44 | NS-032-12 | Stop Nut 5/16-18 Flexloc | 1 |
| 45 | WS-017-08 | Washer (0.328 x 0.625 x 0.062) (SST) | 1 |
| 46 | 00-290030 | Main Drive Shaft Assy. (Incls. Items 5, 6, 53, & 54) | 1 |
| 47 | 00-063260 | Bearing Carrier & Pivot Shaft Assy. (Incls. Items 11 & 50) | 1 |
| 48 | 00-064722 | Gasket - Bearing Carrier | 1 |
| 49 | 00-067500-00018 | O-Ring | 1 |
| 50 | 00-062368 | Flange - Seal | 1 |
| 51 | 00-062367 | Seal - Graphitar | 1 |
| 52 | RP-002-18 | Rollpin 1/4 Dia. x 1-1/4 Lg. (Before S/N 311605529) | 1 |
| 53 | PG-007-37 | Rollpin (After S/N 311605529) | 1 |
| 54 | RP-002-20 | Rollpin 5/16 Dia. x 1-3/8 Lg | 1 |
| 55 | NS-032-35 | Stop Nut 5/16-18 Flexloc | 4 |

## DRIVE UNIT

| ILLUS. PL-58159 | PART NO. | NAME OF PART | AMT. |
|---|---|---|---|
| 56 | SC-041-15 | Cap Screw 5/16-18 x 1-1/4 Hex Hd. (SST) | 4 |
| 57 | 00-875580 | Tightener - Belt (Previous Construction) | 1 |
| 58 | 00-938615-00002 | Belt Tightener Assy. (Incls. Items 58 & 59) (Current Construction) | 1 |
| 59 | WS-005-42 | Washer (Current Construction) | 1 |
| 60 | NS-032-12 | Stop Nut 5/16-18 Flexloc (Current Construction) | 1 |
| 61 | 00-985449 | Kit - Drive Unit (Incls. Items 5, 6, 11, 40, 49, 51, & 53) | 1 |
| 62 | 00-062630 | Abrasive Wheel & Hub Assy. (Incls. Items 1 thru 4, 54, & 55) | 1 |

# NOTES

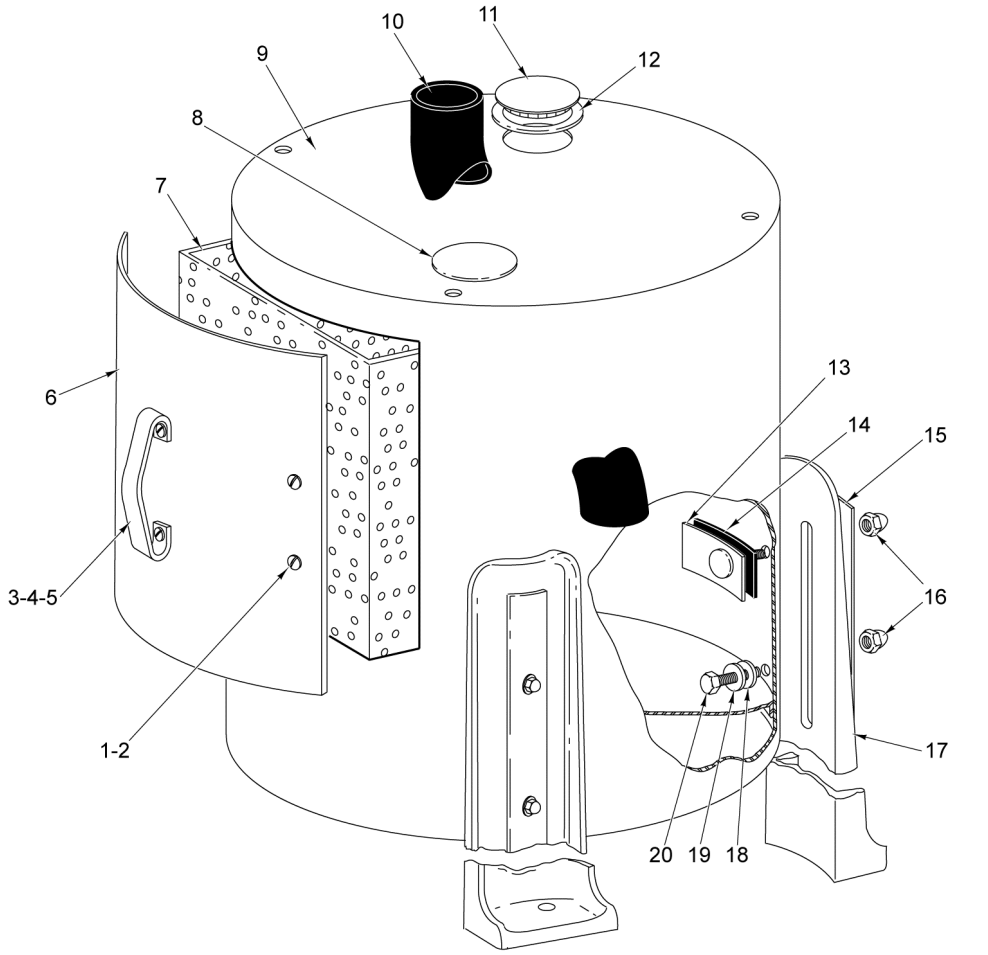


| | | |
|---|---|---|
| 21 | 00-437460 | Strainer Bucket & Door Assy. |
| 22 | 00-290580 | Leg Pack (Set of 3 Legs) |

**PARTS NOT ILLUSTRATED**

## PEEL TRAP UNIT (ML-16952-Z)

## PEEL TRAP UNIT (ML-16952-Z)

| ILLUS. PL-56393 | PART NO. | NAME OF PART | AMT. |
|---|---|---|---|
| 1 | SC-053-05 | Mach. Screw 10-24 x 3/8 Slotted Truss Hd. (SST) | 4 |
| 2 | NS-031-15 | Stop Nut 10-24 Hex (SST) (Elastic) | 4 |
| 3 | 00-111303-00002 | Handle - Door Strainer | 1 |
| 4 | SC-053-05 | Mach. Screw 10-24 x 3/8 Slotted Truss Hd. (SST) | 2 |
| 5 | NS-031-15 | Stop Nut 10-24 Hex (SST) (Elastic) | 2 |
| 6 | 00-291437 | Door - Strainer | 1 |
| 7 | 00-437461 | Strainer Bucket Assy | 1 |
| 8 | 00-064877 | Grommet - Drain Hose | 1 |
| 9 | 00-290404 | Peel Trap Housing Assy | 1 |
| 10 | 00-063273 | Hose - Drain (Peel Trap) | 1 |
| 11 | 00-291592 | Plug - Button (2 In.) | 1 |
| 12 | 00-064953 | Gasket - Plug Button | 1 |
| 13 | 00-077620 | Inside Leg Clamp and Bolt Assy | 3 |
| 14 | 00-062601-00002 | Gasket - Leg Screw | 3 |
| 15 | 00-077619 | Cover - Leg Slot | 3 |
| 16 | NS-025-16 | Acorn Nut 3/8-16 | 6 |
| 17 | 00-077618 | Leg - Peel Trap | 3 |
| 18 | WS-006-13 | Washer (Lead) | 3 |
| 19 | WS-006-44 | Washer (SST) | 3 |
| 20 | SC-041-28 | Cap Screw 3/8-16 x 3/4 Hex Hd. (SST) | 3 |
| 21 | 00-437460 | Strainer Bucket & Door Assy. (Incls. Items 1 thru 7) | 1 |
| 22 | 00-290580 | Leg Pack (Set of 3 Legs) | 1 |

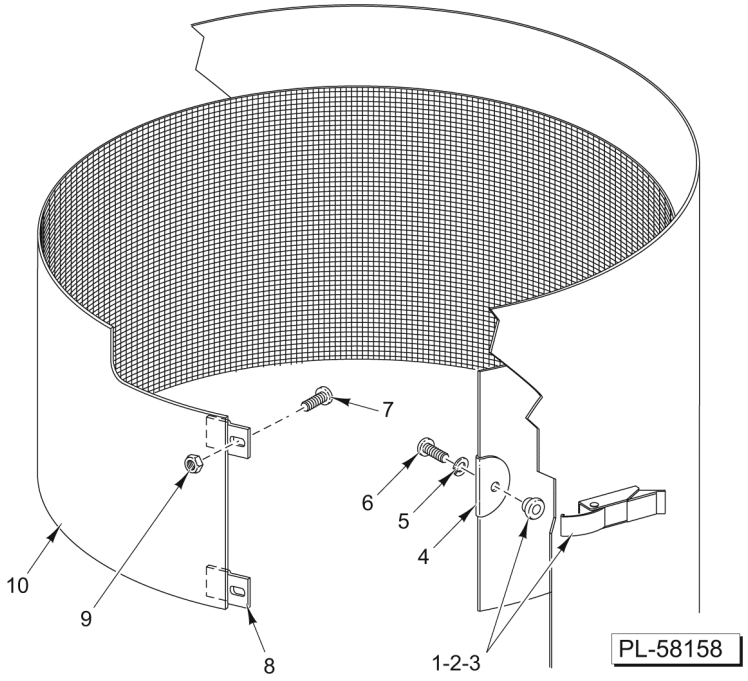


**LINER**

## LINER

| ILLUS. PL-58158 | PART NO. | NAME OF PART | AMT. |
|---|---|---|---|
| 1 | 00-479480 | Latch - Keeper & Draw | 1 |
| 2 | SC-021-98 | Mach. Screw 8-32 x 3/8 Phil. Rd. Hd. (SST) | 2 |
| 3 | NS-031-08 | Stop Nut 8-32 Special (SST) | 2 |
| 4 | 00-479473 | Bracket - Liner | 1 |
| 5 | WL-006-11 | Lockwasher #12 Light (SST) | 1 |
| 6 | SC-066-26 | Mach. Screw 12-24 x 1/2 Phil. Truss Hd. (SST) | 1 |
| 7 | SC-109-62 | Mach. Screw 10-24 x 3/8 Slotted Pan Hd | 2 |
| 8 | 00-479475 | Bracket - Liner LH | 2 |
| 9 | NS-031-15 | Stop Nut 10-24 Hex (SST) | 2 |
| 10 | 00-479494-00001 | Liner Service Assy. (Use For Service) | 1 |

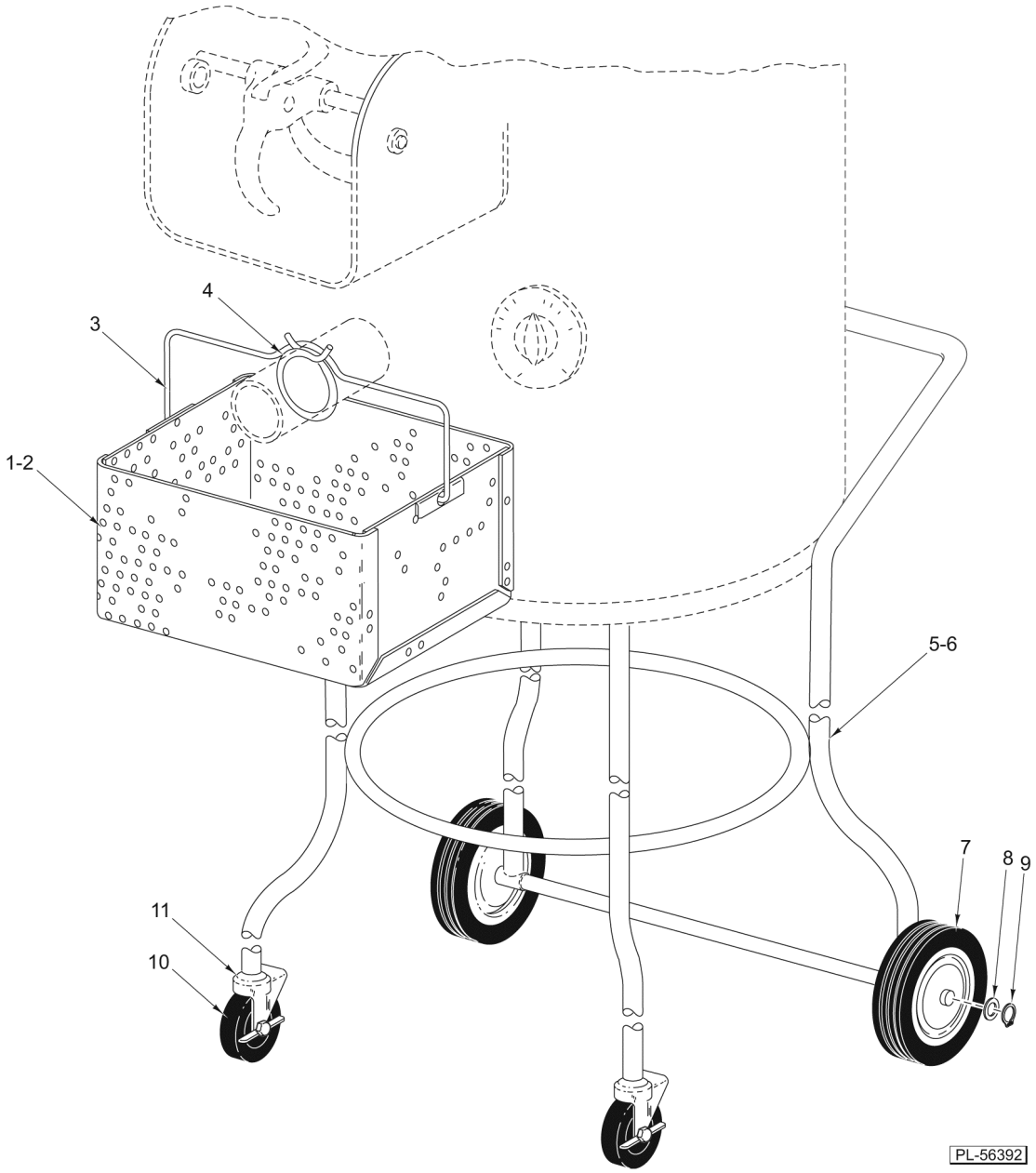


**PORTABLE STAND AND BASKET**

## PORTABLE STAND AND BASKET

| ILLUS. PL-56392 | PART NO. | NAME OF PART | AMT. |
|---|---|---|---|
| 1 | 00-290322 | Basket Assy. (Peel Trap) (Incls. Items 3 & 4) (ML-19869 & ML-137600) | 1 |
| 2 | 00-290471 | Basket Assy. (Peel Trap) (Incls. Items 3 & 4) (ML-19683 & ML-137601) | 1 |
| 3 | 00-069560 | Handle - Basket | 1 |
| 4 | 00-534651 | Clamp - Hose #32 | 1 |
| 5 | 00-290321 | Portable Stand Assy. (Incls. Items 7 thru 11) (ML-19869 & ML-137600) | 1 |
| 6 | 00-290472 | Portable Stand Assy. (Incls. Items 7 thru 11) (ML-19683 & ML-137601) | 1 |
| 7 | 00-068881-00013 | Wheel - Rear | 2 |
| 8 | WS-008-09 | Washer | 2 |
| 9 | RR-010-12 | Retaining Ring | 2 |
| 10 | 00-068881-00014 | Caster - Front | 2 |
| 11 | 00-068881-00015 | Socket - Caster | 2 |