INSTRUCTIONS

MODEL 6430, 6430T, 6460 & 6460T POTATO PEELER

MODEL

ML-19628 6430
ML-19629 6430T

ML-19630 6460
ML-19631 6460T

HOBART
CORPORATION

701 S. RIDGE AVENUE
TROY, OHIO 45374-0001

FORM 34675 (Apr. 2002)

Installation, Operation and Care of MODEL 6430, 6430T, 6460 & 6460T PEELERS

SAVE THESE INSTRUCTIONS

GENERAL

Models 6430 and 6430T Peelers are designed to peel 30 to 33 lbs (13.5 to 15.0 kg) of product in 1 to 3 minutes using a 3/4 HP, single- or three-phase electric motor. The 6430T includes a synchronous timer and is available for single-phase electrical service ONLY.

Models 6460 and 6460T Peelers are designed to peel 50 to 60 lbs (22.5 to 27.0 kg) of product in 1 to 3 minutes using a 1 HP, single- or three-phase electric motor. The 6460T includes a synchronous timer and is available for single-phase electrical service ONLY.

All models incorporate a reinforced peeling disc with the abrasive permanently bonded to its surface and a Lexan Liner for the inside of the hopper. The switch or timer is mounted on the right side of the discharge chute as standard but can be ordered on the left or changed in the field. The bottom of the peeler unit is cushioned with a rubber trim molding which also provides a seal.

Optional accessories include a peel trap or disposer stand.

INSTALLATION

NOTE: Immediately after unpacking, machine should be checked for possible shipping damage. If the machine is found to be damaged after unpacking, save the packaging material and contact the shipper.

This machine MUST be cleaned after installation and before being put into service. Refer to MAINTENANCE for instructions.

PEELER UNIT (FIG. 1)

1. Remove the peeler from its shipping carton and remove the hopper top.
2. Remove the fill tube and bracket assembly from the peeler housing and the cloth bag containing the fill tube gasket and acorn nuts.
3. Do NOT remove the rubber molding on bottom of peeler.
4. Lay the peeler on its side. Slightly loosen the clamp that attaches the drain hose and pull the drain hose down so that it extends approximately 7/8" below the bottom of peeler housing. Tighten the clamp.

On units that will NOT use a peel trap or disposer stand, attach the bottom cover plate using the bolts and washers supplied with the unit.

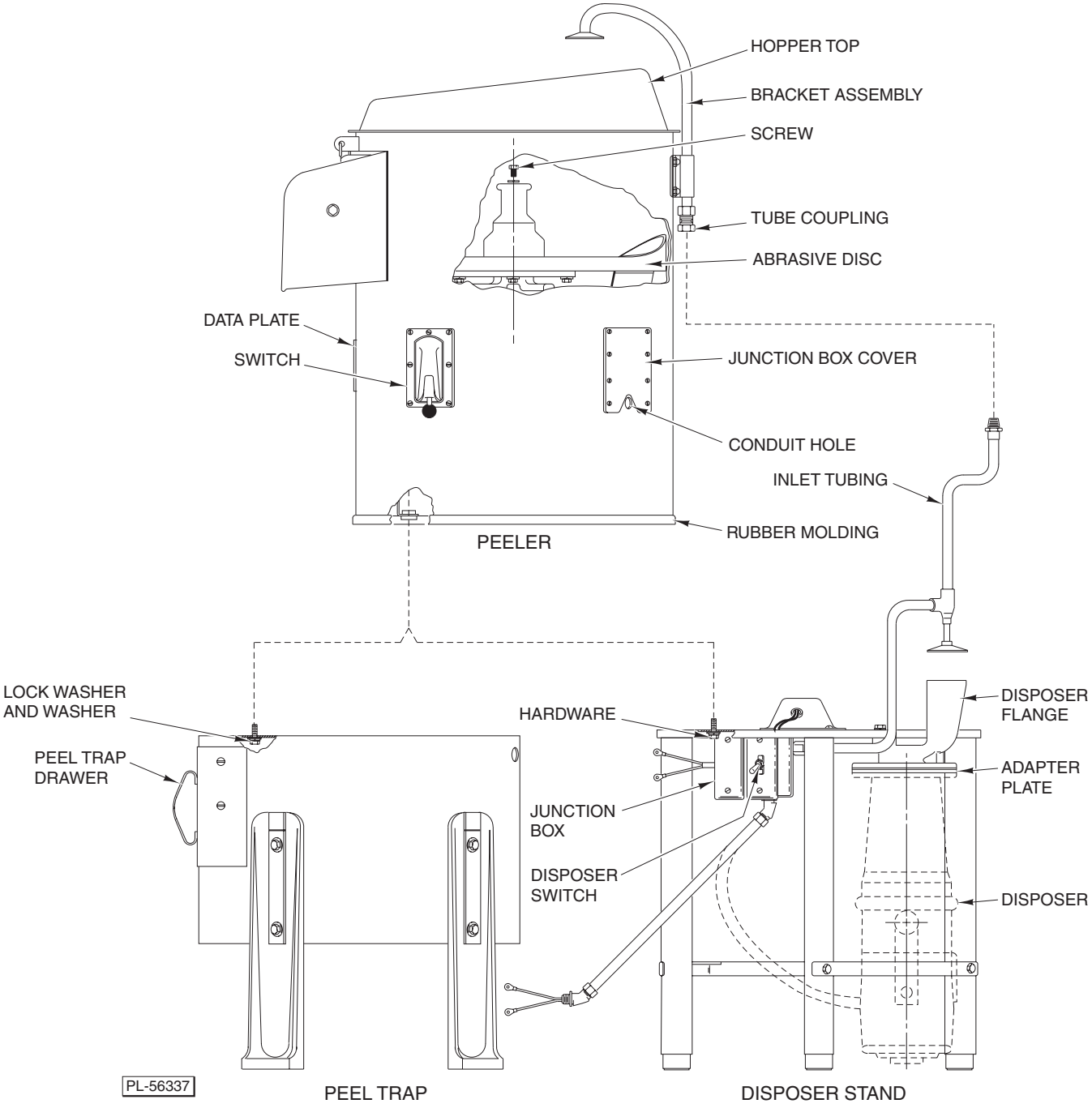
HOPPER TOP
BRACKET ASSEMBLY
SCREW
TUBE COUPLING
ABRASIVE DISC
DATA PLATE
SWITCH
JUNCTION BOX COVER
CONDUIT HOLE
INLET TUBING
RUBBER MOLDING
PEELER
LOCK WASHER AND WASHER
PEEL TRAP DRAWER
HARDWARE
DISPOSER FLANGE
ADAPTER PLATE
JUNCTION BOX
DISPOSER SWITCH
DISPOSER
PL-56337
PEEL TRAP
DISPOSER STAND

Fig. 1

LEXAN LINER

1. Slide the liner (Fig. 2) into the hopper, ensure the liner is under retaining brackets (Fig. 2) and resting on the top of the lip (Fig. 2) on the bottom of the hopper chamber.

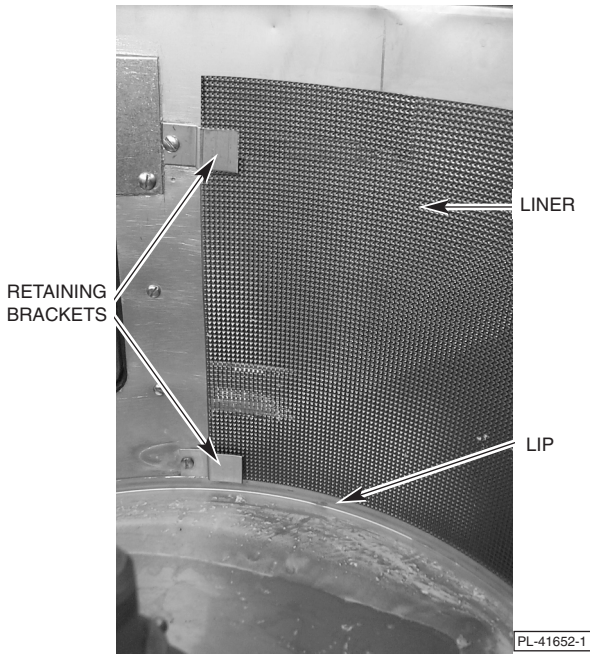

Fig. 2



Fig. 3

2. Push the liner keeper into the hole (Fig. 3) provided.
3. Secure the keeper using the exterior latch.

PEEL TRAP

If a peel trap is to be used, unpack the trap from its shipping carton. Remove the legs and cloth bag from inside the peel trap. The cloth bag contains hardware for attaching the legs.

Legs

It will be necessary to remove the peel trap drawer (Fig. 1) to allow enough room for attaching the legs.

Assemble the legs as follows (Fig. 4):

1. Lay the peel trap on its side.
2. Assemble one of the rubber gaskets to one of the curved leg clamp bolts.
3. Assemble the bolt and gasket from the inside, through one of the leg bolt holes in the peeler housing.
4. Assemble a leg and a leg slot cover on the leg clamp bolt.
5. Place a stainless steel washer and acorn nut onto the clamp bolt and partially tightened, set unit upright.
6. Each leg has an upper and lower leg clamp bolt assembly. When all are assembled and partially tightened, set unit upright.
7. Adjust each leg to a suitable height such that the unit is level, and tighten the acorn nuts.

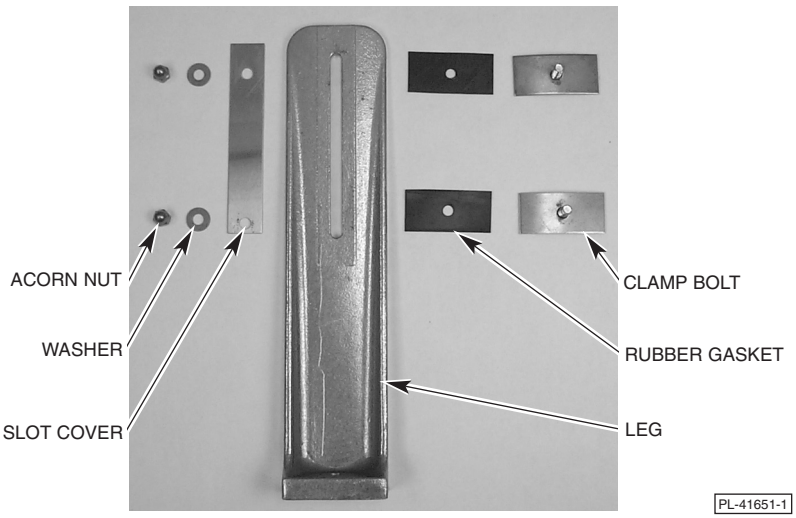

Fig. 4

Peelers

The peeler may be positioned on the peel trap in one of four positions. Each of the positions will cause the peel trap drawer to be located in a different position relative to the discharge chute.

The peel trap drawer may be directly beneath the discharge chute, to the right, left or rear (see Fig. 5).

After selecting the most convenient position for the peel trap drawer, remove the cover disc from the appropriate hole in the peel trap top and position the peeler on top of the peel trap, with the peeler drain hose extending through selected hole (Fig. 5).

The cloth bag shipped in peel trap drawer contains the capscrews, lockwashers and washers (Fig. 1) necessary for fastening the peeler to peel trap.

CAUTION: Excessive tightening of screws may distort housing.

If desired, the peel trap legs may be bolted to the floor.

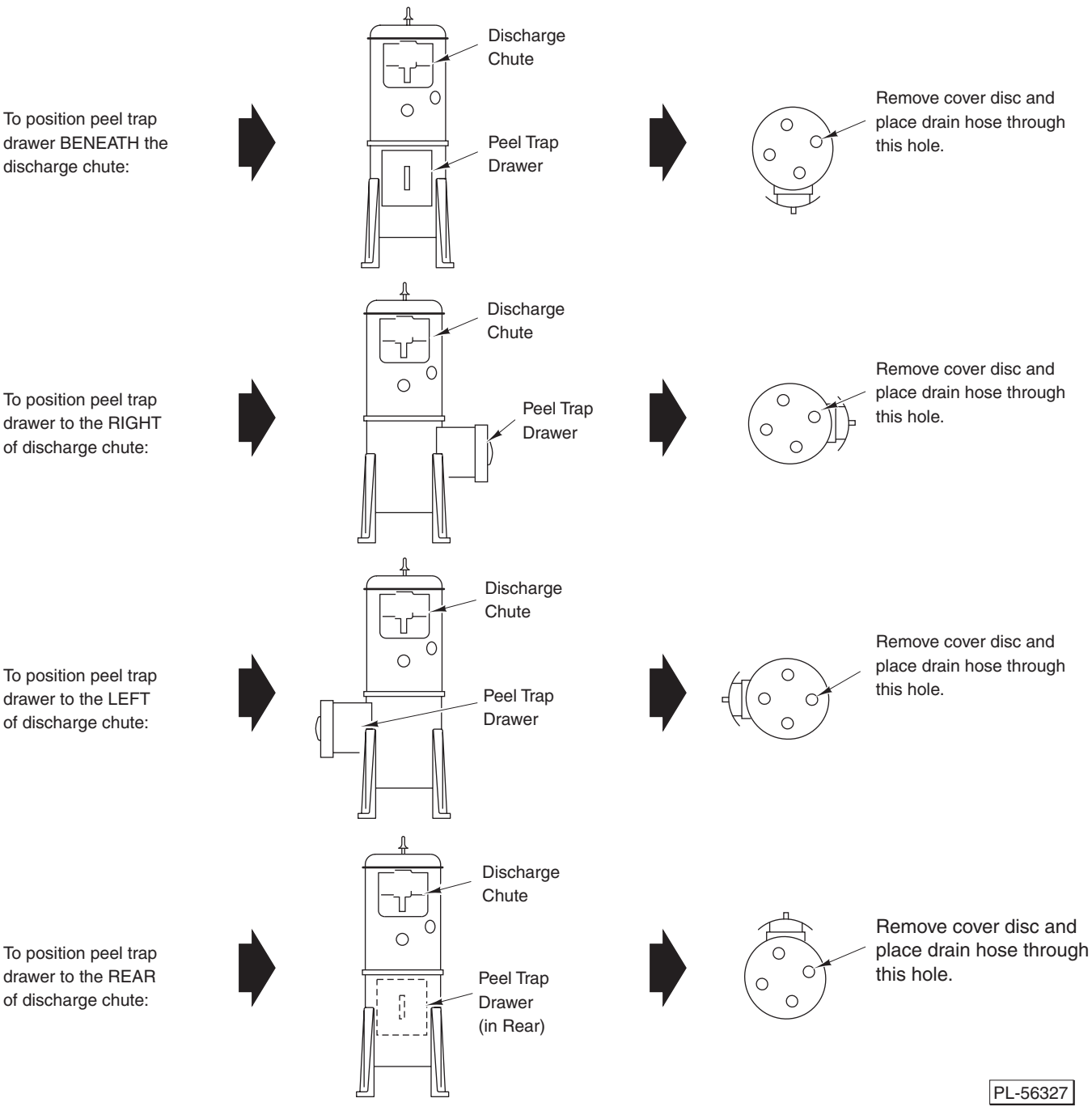
RELATIONSHIP OF PEELER WITH TRAP
VIEW OF TOP OF PEEL TRAP
To position peel trap drawer BENEATH the discharge chute:
Discharge Chute
Peel Trap Drawer
Remove cover disc and place drain hose through this hole.
To position peel trap drawer to the RIGHT of discharge chute:
Discharge Chute
Peel Trap Drawer
Remove cover disc and place drain hose through this hole.
To position peel trap drawer to the LEFT of discharge chute:
Discharge Chute
Peel Trap Drawer
Remove cover disc and place drain hose through this hole.
To position peel trap drawer to the REAR of discharge chute:
Discharge Chute
Peel Trap Drawer (in Rear)
Remove cover disc and place drain hose through this hole.
PL-56327

Fig. 5

DISPOSER STAND

If a disposer stand is to be used, unpack the stand from its shipping carton. The feet may be threaded in or out as necessary to level the disposer stand.

The disposer flange, adapter plate, gaskets and all hardware required for mounting the disposer are assembled and packed in a separate container. Refer to the disposer manual shipped with the disposer and follow the recommendations contained in it. Remove the three mounting bolts and lockwashers from the disposer flange.

Attach the disposer flange (Fig. 1) and if necessary, the adapter plate (Fig. 1) to the disposer.

NOTE: If a Hobart disposer is used, remove and discard the adapter plate and the smaller of the two gaskets.

Using the three mounting bolts and lockwashers (previously removed from disposer flange), mount the disposer and flange assembly to the disposer stand.

Peeler

Position the peeler on top of the disposer stand. Place the peeler drain hose in the hole above the disposer. Fasten the peeler to the stand using hardware (Fig. 1) shipped in the bag tied to the disposer stand.

If desired, the disposer stand feet may be bolted to the floor.

PLUMBING

WARNING: PLUMBING CONNECTIONS MUST COMPLY WITH APPLICABLE SANITARY, SAFETY AND PLUMBING CODES.

Peeler Unit Without Disposer

Using the supplied acorn nuts and gasket, attach the fill tube and bracket assembly (Fig. 1) to the peeler.

Connect a cold water supply to the 1/2" fill tube coupling (Fig. 1).

NOTE: A globe valve for controlling water supply should be installed in the water supply line at a location convenient to the operator.

Peeler Unit With Disposer

Using the supplied acorn nuts and gasket, attach the fill tube and bracket assembly (Fig. 1) to the peeler.

Connect the water inlet tubing (Fig. 1) to the 1/2" fill tube coupling (Fig. 1). Connect the other end of the water inlet tubing to the fill valve, which is mounted on the disposer stand.

Connect a cold water supply line to the fill valve, which has a 3/8"-18 N.P.S. female connection.

ELECTRICAL CONNECTIONS

Before making electrical connections, check the specifications on peeler data plate (Fig 1), as well as those of the disposer (where applicable), to assure they agree with those of your electrical service.

WARNING: ELECTRICAL AND GROUNDING CONNECTIONS MUST COMPLY WITH THE APPLICABLE PORTIONS OF THE NATIONAL ELECTRICAL CODE AND/OR OTHER LOCAL ELECTRICAL CODES.

WARNING: DISCONNECT ELECTRICAL POWER SUPPLY AND PLACE A TAG AT THE DISCONNECT SWITCH TO INDICATE CIRCUIT IS BEING WORKED ON.

If it is desired to move the switch (Fig. 1) or timer to the opposite side of the discharge chute, simply remove the screws that attach the switch or timer and cover plates. Interchange the switch or timer and cover plates and fasten each with the screws.

A $^{7}/_{8}$" conduit hole (Fig. 1) is provided in the peeler housing for $^{1}/_{2}$" trade size electrical conduit. Remove the junction box cover (Fig. 1), make electrical connections and replace the cover.

A separate junction box (Fig. 1) is provided for making disposer connections.

NOTE: The following information is compiled in accordance with the National Electrical Code, latest edition.

BRANCH CIRCUIT SIZE AND PROTECTION

DUAL ELEMENT TIME-DELAY FUSE						
Volts	Phase	Minimum Circuit Ampacity		Maximum Fuse Size		60°C Copper Wire Size
		6430	6460	6430	6460	
115	1	25	25	25	25	10
200-230	1	15	15	15	15	14
200-230	3	15	15	6	10	14
460	3	15	15	3	6	14

INVERSE TIME CIRCUIT BREAKER						
Volts	Phase	Minimum Circuit Ampacity		Maximum Circuit Breaker Size		60°C Copper Wire Size
		6430	6460	6430	6460	
115	1	25	30	25	30	10
200-230	1	20	20	20	20	12
200-230	3	15	15	10	10	14
460	3	15	15	6	6	14

OPERATION

Using the lugs on the hopper top as locators, position the hopper top on the housing and turn it clockwise into place.

Close and latch the discharge chute door.

Pour the product into the hopper. There should be room in the hopper for the product to move around while peeling. Do NOT overload the peeler; peeler capacities are 30 to 33 lbs (13.5 to 15.0 kg) maximum for the 6430/6430T and 50 to 60 lbs (22.5 to 27.0 kg) for the 6460/6460T.

Turn on the water supply. On units with a disposer , turn on the disposer switch (Fig. 1). This will open the valve.

Turn on the peeler. On units equipped with a timer, set the timer at the desired time.

Peeling times will vary depending on the type and condition of product. When the desired degree of peeling has been reached, turn off the water (or disposer where applicable). Place a container to catch the product under the discharge chute door.

NOTE: On units equipped with a timer, if the timer has expired, it will be necessary to reset the timer to allow enough time for the product to be discharged.

After the product has been completely discharged, turn off the peeler and it is ready for a repeat operation.

If the peeler is equipped with a peel trap, it will be necessary to empty the peel trap drawer occasionally (after a few batches).

WARNING: DISCONNECT ELECTRICAL POWER SUPPLY AND REPLACE A TAG AT THE DISCONNECT SWITCH, INDICATING CIRCUIT IS BEING WORKED ON BEFORE BEGINNING ANY MAINTENANCE PROCEDURE.

CLEANING

The peeler should be cleaned after the peeling operation has been completed.

As soon as the peeling operation has been completed and BEFORE the hopper has had time to dry, turn on the water or disposer, if equipped, and flush the interior of the hopper. Turn off the water (or disposer).

Rotate the hopper top COUNTERCLOCKWISE and lift to remove. Clean the hopper top in a sink.

Lift out the abrasive disc (Fig. 1), which is NOT fastened to the shaft and scrub it with a brush and mild soap. Clean the housing beneath the abrasive disc with mild soap and water.

NOTE: If the abrasive disc should stick and is NOT easily removed, it may be loosened by removing the hex head screw (Fig. 1) on top of the hub and threading a longer screw (such as $^{5}/_{16}$"-18 x 1-$^{1}/_{2}$") in until disc loosens.

To remove the lexan liner, unlatch the exterior latch on the outside of the hopper and push the keeper out of the hole (Fig. 3). Slide the liner out from under the retaining brackets. Take to the sink and scrub with a nonabrasive brush, using soap and water to clean. Allow to air dry before installing into the hopper.

Turn on the water or disposer, if equipped, and thoroughly clean the interior of the hopper using a mild soap and brush. Turn off the water or disposer.

If the drawer is equipped with a peel trap, remove the peel trap drawer and thoroughly clean the drawer, as well as the peel trap interior.

The discharge chute MUST be left open when the unit is NOT in use in order to prolong the life of the door seal.

MOTOR

This machine is equipped with a manual-reset overload protection switch. If during operation, the motor should overheat and trip this switch, turn the peeler switch or timer off and allow the motor to cool for several minutes. To reset the switch, remove the top screw from the round cover plate (Fig. 6), rotate the cover plate and push the red button (Fig. 6). Install round cover plate and screw onto potato peeler.

If the overload switch persists in tripping, contact your local Hobart Service Office.

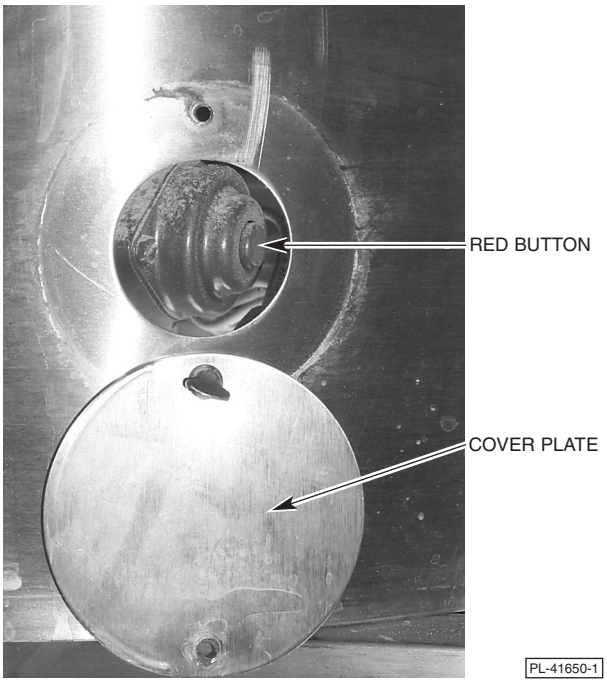

Fig. 6

MAINTENANCE

LUBRICATION

The peeler uses sealed ball bearings and therefore, requires no lubrication maintenance.

TROUBLESHOOTING

SYMPTOM	POSSIBLE CAUSE
Peeler won't operate.	Electrical power not connected.
	Circuit breaker tripped or fuse blown.
Excessive foaming.	Too much water in the hopper.
If the above suggestions do not remedy the situation, contact Hobart Service Office.	

SERVICE

Contact your local Hobart-authorized Service Office for any repairs or adjustments needed on this equipment.

LEGEND

E1-ELECTRICAL CONN.: 7/8" DIA. HOLE (FOR 1/2" CONDUIT)
P1-WATER CONNECTION: ST'D. 1/2" FEMALE PIPE THREAD
P2-DRAIN HOSE: 2-3/8" I.D. X 2-3/4" O.D.

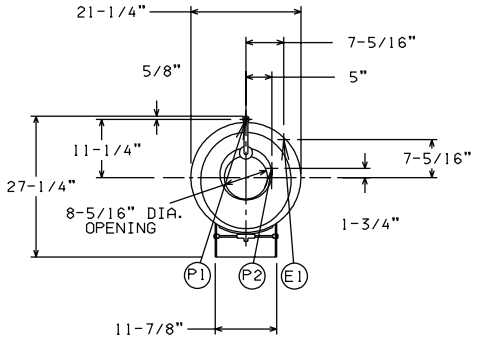

WARNING

ELECTRICAL AND GROUNDING CONNECTIONS MUST COMPLY WITH THE APPLICABLE PORTIONS OF THE NATIONAL ELECTRICAL CODE AND/OR OTHER LOCAL ELECTRICAL CODES.

PLUMBING CONNECTIONS MUST COMPLY WITH APPLICABLE SANITARY, SAFETY AND PLUMBING CODES IN FORCE.

NOTE:

NET WEIGHT OF PEELER - 142 LBS.
DOMESTIC SHIPPING WEIGHT OF PEELER - 147 LBS.

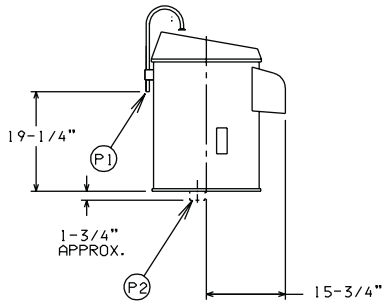

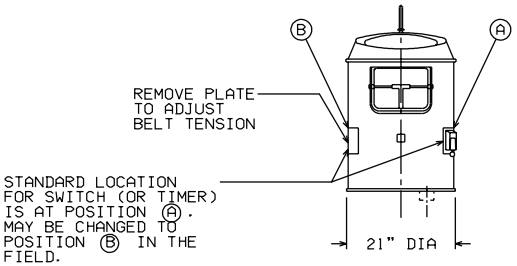

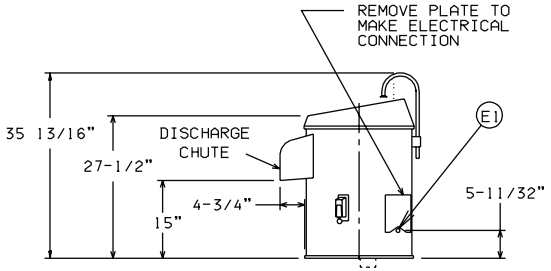

MODEL/ ELEC. CODE	ELECTRICAL SPECIFICATION	AMPS	DUAL ELEMENT TIME DELAY FUSE STYLE			INVERSE TIME CIRCUIT BREAKER STYLE		
			MINIMUM CIRCUIT AMPACITY	MAXIMUM FUSE SIZE	60° C COPPER WIRE SIZE	MINIMUM CIRCUIT AMPACITY	MAXIMUM CIRCUIT BREAKER	60° C COPPER WIRE SIZE
6430/J	200-230/60/3	3.2	15	6	14	15	10	14
6430/H	460/60/3	1.6	15	3	14	15	6	14
6430T/A	115/60/1	13.0	25	25	10	25	25	10
6430T/E	200-230/60/1	6.5	15	15	14	20	20	12

MODEL 6430 & 6430-T
PEELER (WITHOUT TRAP)
D-272008
REV. C

PL-56334

LEGEND:

E1-ELECTRICAL CONNECTION: 7/8" DIA. HOLE FOR 1/2" CONDUIT

P1-WATER CONNECTION: STANDARD 1/2" FEMALE PIPE THREAD

P2-DRAIN CONNECTION: STANDARD 2" MALE PIPE THREAD

NOTES:

ALL DIMENSIONS TAKEN FROM FLOOR LINE MAY BE INCREASED AS MUCH AS 13/16" BY LEG ADJUSTMENT.

APPROXIMATE SHIPPING WEIGHT OF PEELER AND PEEL TRAP UNIT: 201 LBS.

APPROXIMATE SHIPPING WEIGHT OF PEELER LESS PEEL TRAP UNIT: 147 LBS.

NET WEIGHT OF PEELER AND PEEL TRAP UNIT: 190 LBS.

WARNING

ELECTRICAL AND GROUNDING CONNECTIONS MUST COMPLY WITH THE APPLICABLE PORTIONS OF THE NATIONAL ELECTRICAL CODE AND/OR OTHER LOCAL ELECTRICAL CODES.

PLUMBING CONNECTIONS MUST COMPLY WITH APPLICABLE SANITARY, SAFETY AND PLUMBING CODES IN FORCE.

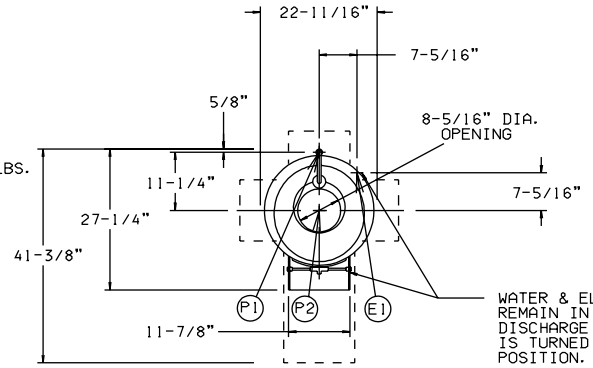

WATER & ELECTRIC CONNECTIONS REMAIN IN SAME RELATION TO DISCHARGE CHUTE WHEN PEELER IS TURNED TO ANOTHER DISCHARGE POSITION.

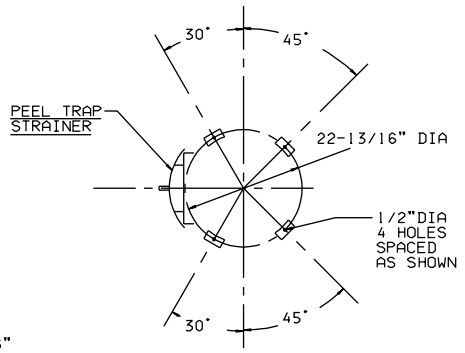

PLAN VIEW OF PEEL TRAP SHOWING HOLES IN LEGS FOR BOLTING TO FLOOR WHEN REQUIRED.

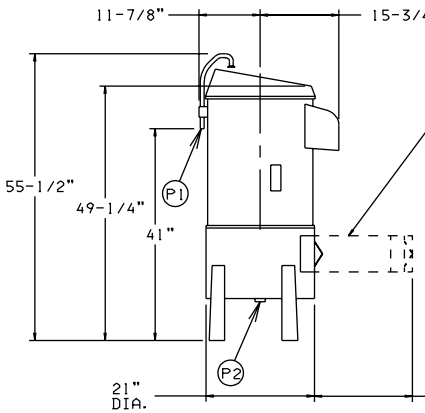

SPACE REQ'D FOR REMOVAL OF PEEL TRAP STRAINER

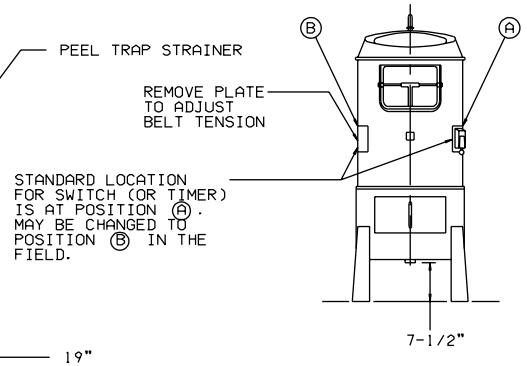

STANDARD LOCATION FOR SWITCH (OR TIMER) IS AT POSITION (A). MAY BE CHANGED TO POSITION (B) IN THE FIELD.

PEELER IS SECURED TO PEEL TRAP AS SHOWN, BY FOUR SCREWS, LOCATED RADIALLY FROM CENTER LINE. ASSEMBLY CAN BE MADE SO THAT PEELER WILL DISCHARGE IN ANY ONE OF THE FOUR POSITIONS AS SHOWN IN TOP VIEW.

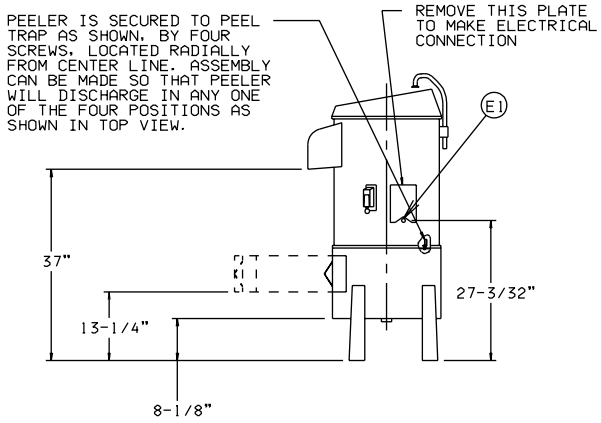

MODEL/ ELEC. CODE	ELECTRICAL SPECIFICATION	AMPS	DUAL ELEMENT TIME DELAY FUSE STYLE			INVERSE TIME CIRCUIT BREAKER STYLE		
			MINIMUM CIRCUIT AMPACITY	MAXIMUM FUSE SIZE	60° C COPPER WIRE SIZE	MINIMUM CIRCUIT AMPACITY	MAXIMUM CIRCUIT BREAKER	60° C COPPER WIRE SIZE
6430/J	200-230/60/3	3.2	15	6	14	15	10	14
6430/H	460/60/3	1.6	15	3	14	15	6	14
6430T/A	115/60/1	13.0	25	25	10	25	25	10
6430T/E	200-230/60/1	6.5	15	15	14	20	20	12

MODEL 6430 & 6430-T
PEELER (WITH PEEL TRAP)
D-271985
REV. B

PL-56333

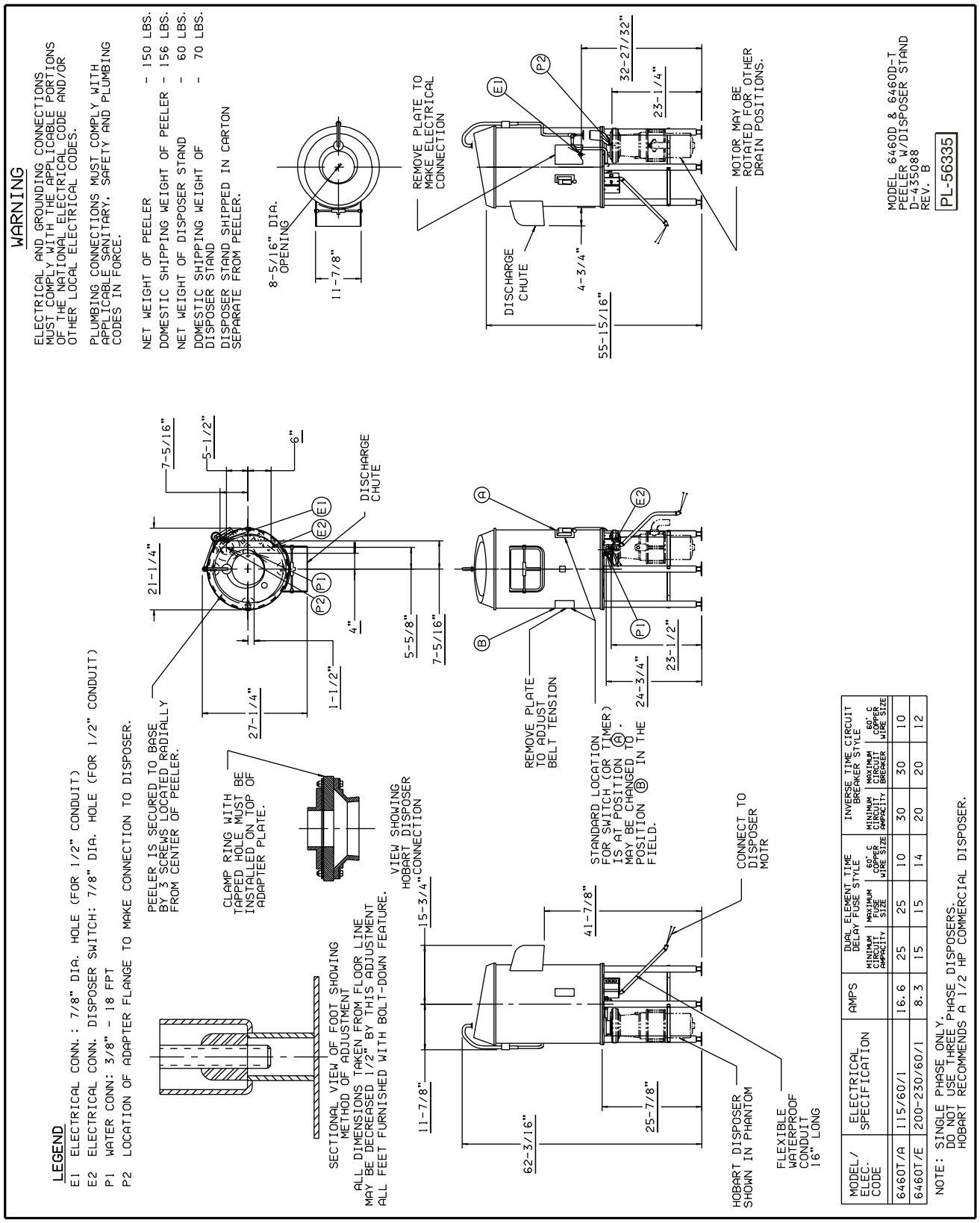

MODEL/ ELEC. CODE	ELECTRICAL SPECIFICATION	AMPS	DUAL ELEMENT TIME DELAY FUSE STYLE			INVERSE TIME CIRCUIT BREAKER STYLE		
			MINIMUM CIRCUIT CAPACITY	MAXIMUM FUSE SIZE	60° C COPPER WIRE SIZE	MINIMUM CIRCUIT CAPACITY	MAXIMUM CIRCUIT BREAKER	60° C COPPER WIRE SIZE
6460T/A	115/60/1	16.6	25	25	10	30	30	10
6460T/E	200-230/60/1	8.3	15	15	14	20	20	12

NOTE: SINGLE PHASE ONLY.
DO NOT USE THREE PHASE DISPOSERS.
HOBART RECOMMENDS A 1 1/2 HP COMMERCIAL DISPOSER.

INSTALLATION DIAGRAM (DISPOSER STAND)

NOTES

NOTES