HOBART

CATALOG OF REPLACEMENT PARTS



6430CE POTATO PEELER

ML-136156 **6430T (CE)**

A product of HOBART 701 S. RIDGE AVENUE TROY, OHIO 45374-0001

FORM 43334 (October 2016)

 © HOBART 2016

Table of Contents

5 TIMER UNIT
7 HOUSING UNIT
9 CHUTE UNIT
11 LINER UNIT
13 DRIVE UNIT
15 PEEL TRAP UNIT

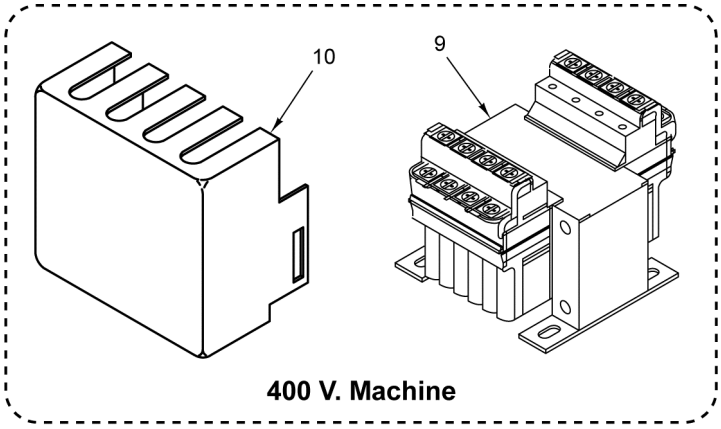

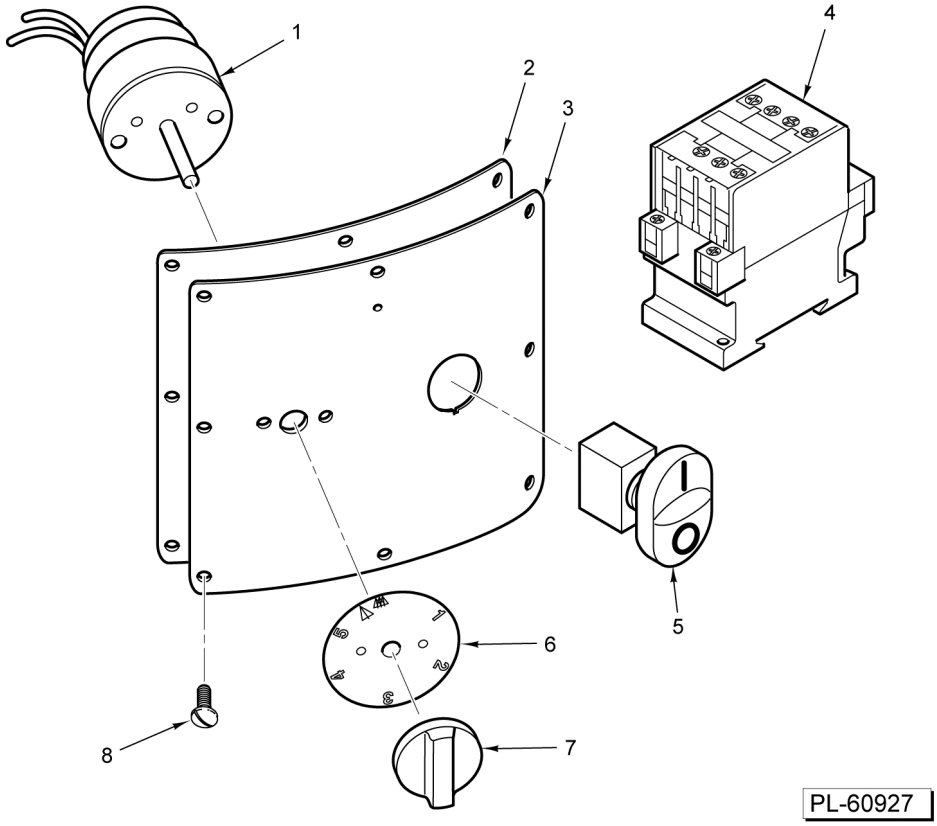

TIMER UNIT

TIMER UNIT

ILLUS. PL-60927	PART NO.	NAME OF PART	AMT.
1	00-294650-04-13	Timer Assy	1
2	00-891511	Gasket	1
3	00-914911	Plate - Cover (Timer/Switch)	1
4	00-914288	Contactor	1
5	00-087711-232-1	Switch (Start/Stop)	1
6	00-914913	Dial - Adhesive	1
7	00-914914	Knob - Timer	1
8	SD-033-44	Self-Tapping Screw 8-18 x 5/16 Slotted Pan Hd., Type B	8
9	00-944019	Transformer (400 V.)	1
10	00-944033	Cover - Transformer	2

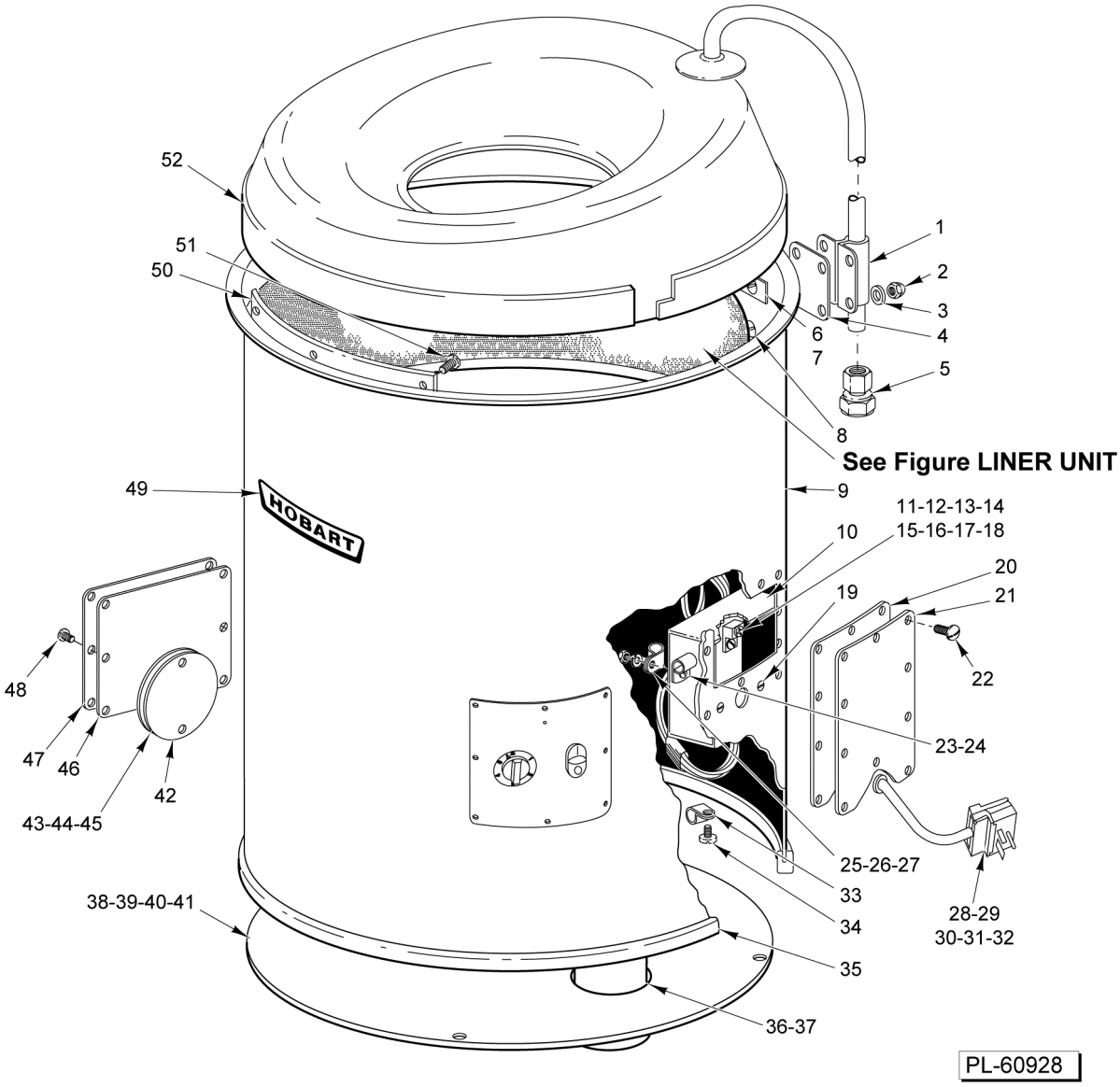

HOUSING UNIT

HOUSING UNIT

ILLUS. PL-60928	PART NO.	NAME OF PART	AMT.
1	00-078115	Fill Tube & Bracket Assy	1
2	NS-025-01	Crown Nut 10-24 (SST)	4
3	WS-002-30	Washer (Fiber)	AR
4	00-078105	Gasket - Fill Tube	1
5	00-069903-00002	Coupling (1/2 Female Pipe x 5/8 Tube)	1
6	SC-022-18	Mach. Screw 10-24 x 7/16 Slotted Flat Hd. (SST)	2
7	00-124518	Bracket - Support	1
8	SC-025-07	Mach. Screw 10-24 x 5/16 Slotted Bndg. Hd. (SST)	2
9	00-124697-00001	Housing - Formed (6430)	1
10	00-290497	Bracket - Wire Clamp	1
11	00-118544-00001	Lug - Solderless	1
12	SC-008-41	Mach. Screw 10-32 x 1/2 Slotted Rd. Hd	1
13	WL-007-12	Lockwasher 10 External Shakeproof	1
14	NS-009-30	Nut 10-32 Hex	1
15	SC-027-28	Mach. Screw 8-32 x 3/8 Slotted Rd. Hd. (Brass)	6
16	SC-027-29	Mach. Screw 8-32 x 3/8 Slotted Rd. Hd. (Brass)	3
17	WL-010-01	Lockwasher #8 External Shakeproof	3
18	NS-010-11	Nut 8-32 Hex (Brass)	3
19	SC-022-09	Mach. Screw 8-32 x 1/2 Slotted Flat Hd. (SST)	2
20	00-124527	Gasket - Junction Box Cover	1
21	00-124525	Cover - Junction Box	1
22	SD-033-44	Self-Tapping Screw 8-18 x 5/16 Slotted Pan Hd., Type B	10
23	00-078752-00006	Clamp	1
24	SC-081-17	Mach. Screw 10-32 x 1 Slotted Rd. Hd. (SST)	1
25	00-078752-00004	Retainer (7/16 In.)	3
26	WL-007-12	Lockwasher 10 External Shakeproof	1
27	NS-009-30	Nut 10-32 Hex	1
28	00-117613-00037	Cord & Plug Assy. (400/50/3)	1
29	00-117542-00024	Cord & Plug Assy. (240/50/1)	1
30	FE-023-33	Strain Relief - Electrical (Use With Item 28)	1
31	FE-026-25	Strain Relief - Electrical (Use With Item 29)	1
32	FE-006-05	Lock Nut 1/2 (Electrical) (Use With Items 28 & 29)	1
33	00-078752-00004	Retainer (7/16 In.)	2
34	SC-009-65	Mach. Screw 8-32 x 1/4 Slotted Rd. Hd	2
35	00-062635-00002	Base - Rubber	1
36	00-082437	Hose - Drain	1
37	00-089977	Clamp - Hose	1
38	00-078138	Plate - Bottom Cover	1
39	SC-041-10	Cap Screw 5/16-18 x 5/8 Hex Hd. (SST)	4
40	WL-006-22	Lockwasher 5/16 Light	4
41	NS-018-06	Jam Nut 5/16-18 Hex (SST)	8
42	00-124529	Gasket - Reset Cover	1
43	00-124526	Cover - Reset Button	1
44	00-070641-00018	Thumb Screw 8-32	2
45	NS-031-08	Stop Nut 8-32 Special (SST) (Use with Top Thumb Screw)	1
46	00-124528	Gasket - Cover	1
47	00-124522	Cover - Blank	1
48	SD-033-44	Self-Tapping Screw 8-18 x 5/16 Slotted Pan Hd., Type B	8
49	00-118364	Logo (Hobart)	1
50	00-124754-00001	Reinforcement - Hopper (6430)	1
51	SC-053-06	Mach. Screw 10-24 x 5/8 Slotted Truss Hd. (SST)	3
52	00-077919	Top - Hopper	1

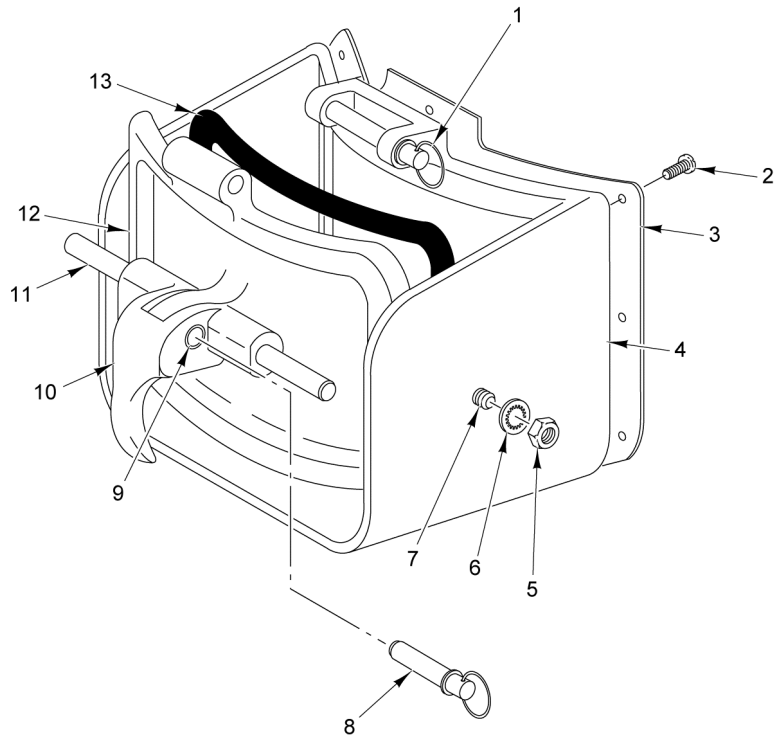

14	00-437420	Door & Handle Assy.

PART NOT ILLUSTRATED

PL-60929

CHUTE UNIT

CHUTE UNIT

ILLUS. PL-60929	PART NO.	NAME OF PART	AMT.
1	00-292011-00001	Pin - Lock	1
2	SC-112-77	Mach. Screw 10-24 x 7/16 Slotted Pan Hd. (SST)	8
3	00-078114	Gasket - Chute	1
4	00-077981	Chute	1
5	NS-018-06	Jam Nut 5/16-18 Hex (SST)	2
6	WL-008-22	Lockwasher 5/16 Internal Shakeproof	2
7	00-064200-00002	Stud - Latch	2
8	00-292011-00003	Pin - Lock	1
9	00-078145	Bushing - Chute Door	1
10	00-437455	Handle - Locking Assy. (Incls. Item 11)	1
11	00-290338	Shaft - Door Locking	2
12	00-078148	Chute Door - Bushing & Seal Assy. (Incls. Item 9 & 13)	1
13	00-062372-00002	Seal - Chute Door	1
14	00-437420	Door & Handle Assy. (Incls. Items 8 thru 13)	1

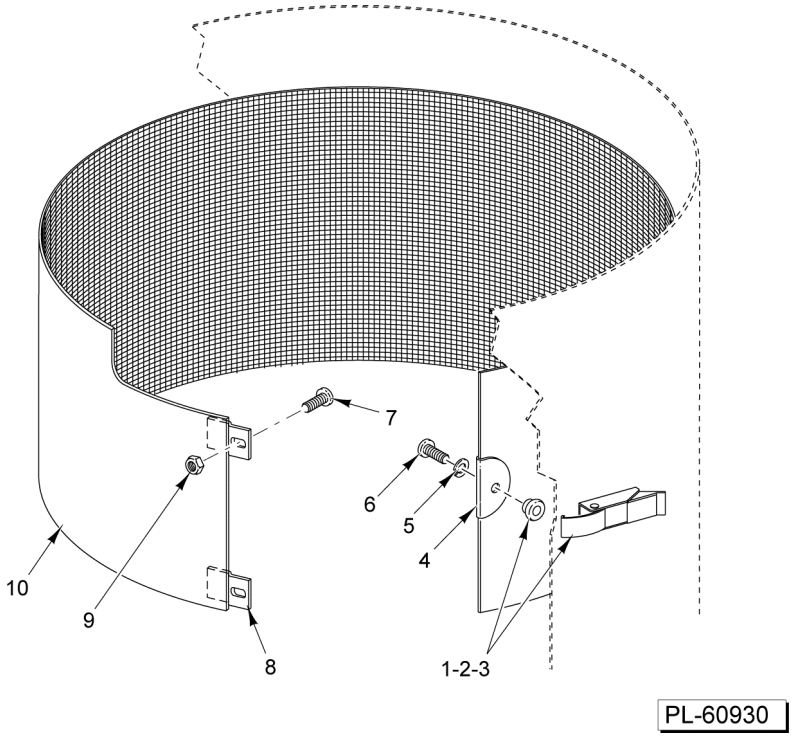

LINER UNIT

LINER UNIT

ILLUS. PL-60930	PART NO.	NAME OF PART	AMT.
1	00-479480	Latch - Keeper & Draw	1
2	SC-021-98	Mach. Screw 8-32 x 3/8 Phil. Rd. Hd. (SST)	2
3	NS-031-08	Stop Nut 8-32 Special (SST)	2
4	00-479473	Bracket - Liner	1
5	WL-006-11	Lockwasher #12 Light (SST)	1
6	SC-066-26	Mach. Screw 12-24 x 1/2 Phil. Truss Hd. (SST)	1
7	SC-109-62	Mach. Screw 10-24 x 3/8 Slotted Pan Hd	2
8	00-479475	Bracket - Liner LH	2
9	NS-031-15	Stop Nut 10-24 Hex (SST)	2
10	00-479494-00002	Liner Service Assy. (Incls. Items 4, 5, & 6)	1

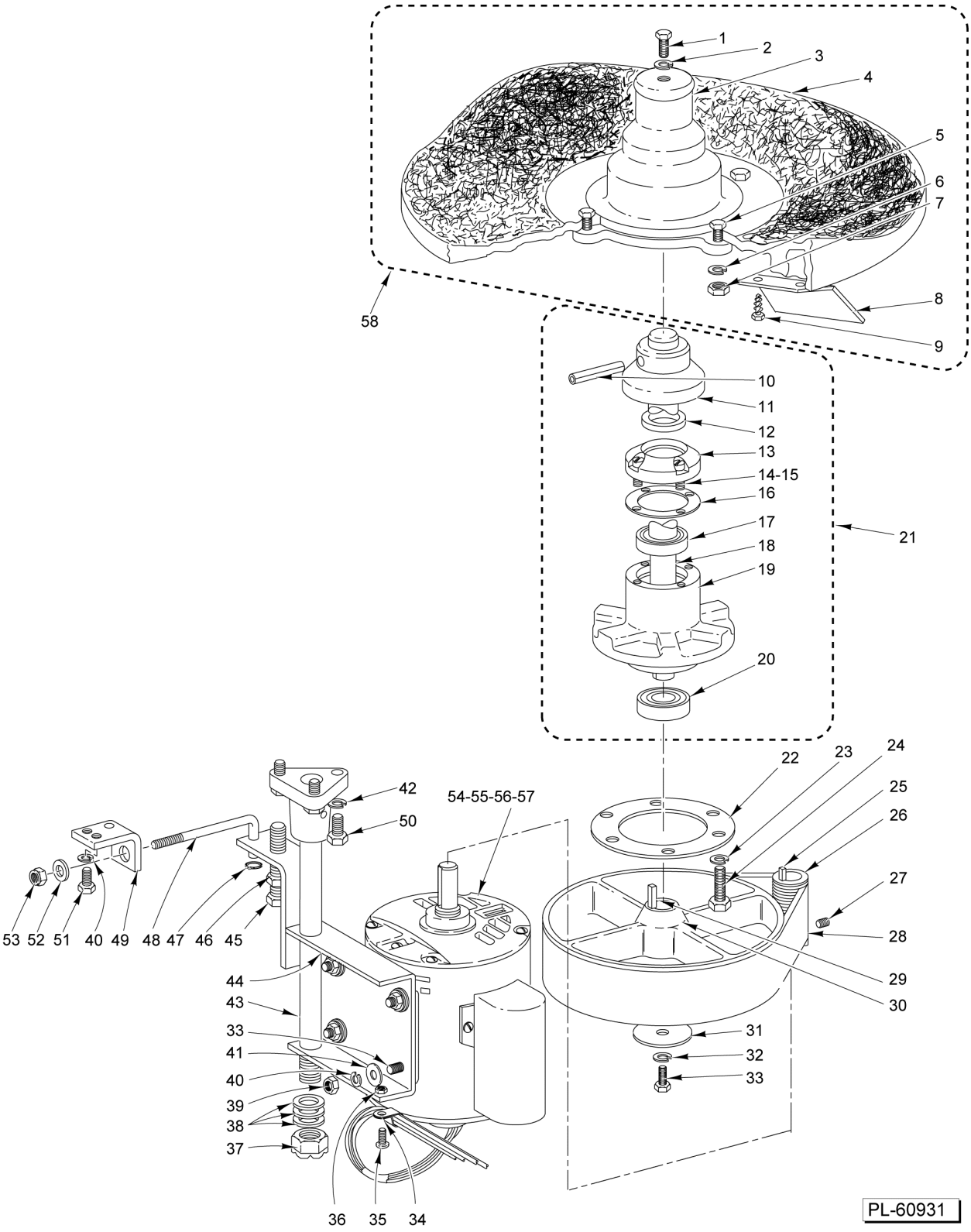
1
2
3
4
5
6
7
8
9
58
10
11
12
13
14-15
16
17
18
19
20
21
22
23
24
25
26
27
28
29
30
31
32
33
42
50
54-55-56-57
53 52 51 40 49 48 47 46 45
44
43
33
41
40
39
38
37
36 35 34
PL-60931

DRIVE UNIT

DRIVE UNIT

ILLUS. PL-60931	PART NO.	NAME OF PART	AMT.
1	SC-041-09	Cap Screw 5/16-18 x 1/2 Hex Hd. (SST)	1
2	00-070706-00002	Washer - Sealer	1
3	00-078154	Drive Hub & Liner Assy.	1
4	00-078198	Abrasive Disc (Disc Only)	1
5	SC-041-31	Cap Screw 3/8-16 x 1-1/4 Hex Hd. (SST)	4
6	WL-006-27	Lockwasher 3/8 Helical (SST)	4
7	NS-018-14	Jam Nut 3/8-16 Hex	4
8	00-078109	Wiper - Hopper	2
9	SD-009-16	Self-Tapping Screw 1/4-20 x 3/4 Hex Hd., Type F	4
10	PS-003-40	Spiral Pin 3/8 Dia. x 2-1/4 Lg. (SST)	1
11	00-077960	Flinger	1
12	00-077483	Seal - Drive Shaft	1
13	00-077979	Retainer - Bearing	1
14	SC-012-36	Mach. Screw 10-24 x 3/4 Slotted Fil. Hd	4
15	WL-003-20	Lockwasher #10 Light	4
16	00-078106	Gasket - Bearing Retainer	1
17	BB-015-08	Bearing - Ball (SKF 6005-2RSI/C3 OE6 HT 51)	1
18	00-077965	Shaft - Drive	1
19	00-077978	Support - Drive Shaft	1
20	BB-005-34	Bearing - Ball (NSK 6204DDUCE1SRIS)	1
21	00-078240	Vertical Drive Assy. (Incls. Items 10 thru 20)	1
22	00-078110	Gasket - Support Hub	1
23	WL-004-03	Lockwasher 3/8 Medium	6
24	SC-036-57	Cap Screw 3/8-16 x 1-1/4 Hex Hd	6
25	00-012430-00064	Key	1
26	00-081356	Pulley - Motor (50 Hz.)	1
27	SC-047-12	Set Screw 1/4-20 x 3/8 Socket Hdls., Knife Cup Pt	1
28	00-078094	Belt - Drive	1
29	00-012430-00148	Key	1
30	00-077962	Pulley - Drive	1
31	WS-005-08	Washer (0.344 x 1.375 x 0.125)	1
32	WL-007-19	Lockwasher 5/16 External Shakeproof	1
33	SC-036-25	Cap Screw 5/16-18 x 3/4 Hex Hd	AR
34	00-078752-00004	Retainer (7/16 In.)	1
35	SC-007-42	Mach. Screw 8-32 x 1/2 Slotted Rd. Hd	1
36	NS-009-12	Nut 8-32 Hex	1
37	NS-031-41	Stop Nut 3/4-16 Elastic	1
38	WS-012-41	Washer (0.797 x 1.125 x 0.062)	AR
39	NS-013-11	Nut 5/16-18 Hex Fin	4
40	WL-003-43	Lockwasher 5/16 Light	AR
41	WS-005-05	Washer (0.344 x 0.750 x 0.062)	4
42	WS-012-41	Washer (0.797 x 1.125 x 0.062)	3
43	00-123739	Shaft Assy. (Motor Mount)	1
44	00-077993	Motor Mounting Bracket Assy.	1
45	SC-111-75	Cap Screw 3/8-16 x 3-1/2 Hex Hd. (Thd. to Hd.)	1
46	NS-013-22	Nut 3/8-16 Hex	1
47	RR-007-10	Retaining Ring	1
48	00-077987-00001	Tightener - Belt	1
49	00-077988	Bracket - Belt Tightener	1
50	SC-090-08	Cap Screw 5/16-24 x 1 Hex Hd	3
51	SC-090-07	Cap Screw 5/16-24 x 5/8 Hex Hd	2
52	WS-004-25	Washer (0.328 x 0.750 x 0.062)	1
53	NS-032-12	Stop Nut 5/16-18 Flexloc	1
54	00-875503-00001	Motor (115/200-230 V., 60 Hz., 1 Ph.)	1
55	00-875504-00001	Motor (200-230/460 V., 60 Hz., 3 Ph.)	1
56	SD-015-39	Self-Tapping Screw 8-32 x 1/4 Phil. Pan Hd., Type TT	1
57	WL-007-07	Lockwasher #8 External Shakeproof	1
58	00-123730	Hub Disc Assy. (Incls. Items 1 thru 9)	1

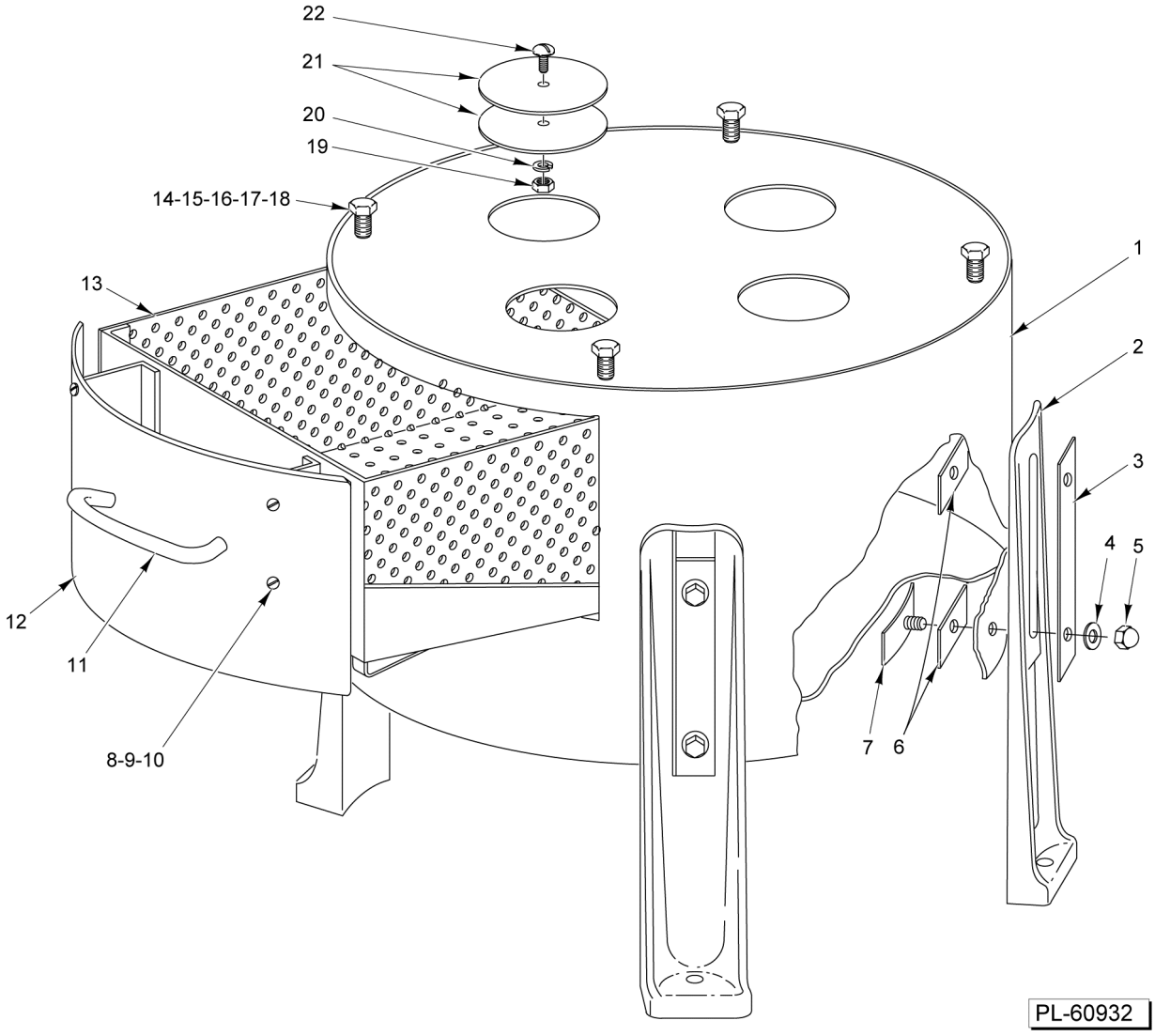

PEEL TRAP UNIT

PEEL TRAP UNIT

ILLUS. PL-60932	PART NO.	NAME OF PART	AMT.
1	00-077938-00001	Peel Trap Assy. (6430)	1
2	00-077963	Leg - Peel Trap	4
3	00-077990	Cover - Leg Slot	4
4	WS-006-44	Washer	8
5	NS-025-16	Acorn Nut 3/8-16	8
6	00-062601-00002	Gasket - Leg Screw	8
7	00-077620	Inside Leg Clamp and Bolt Assy	8
8	SC-053-05	Mach. Screw 10-24 x 3/8 Slotted Truss Hd. (SST)	4
9	00-526407	Adhesive	AR
10	NS-031-15	Stop Nut 10-24 Hex (SST)	4
11	00-478486	Handle - Strainer Door	1
12	00-478484-00001	Strainer Door & Support (6430)	1
13	00-478490-00001	Basket - Peel Trap Strainer Assy. (6430 Series)	1
14	SC-113-18	Mach. Screw 5/16-18 x 1-1/4 Hex Hd. (SST)	4
15	WL-006-22	Lockwasher 5/16 Light	4
16	WS-017-08	Washer (0.328 x 0.625 x 0.062) (SST)	4
17	NS-018-06	Jam Nut 5/16-18 Hex (SST)	8
18	NS-015-11	Nut 5/16-18 Hex (SST)	4
19	NS-011-18	Nut 10-24 Hex (SST)	3
20	WL-006-07	Lockwasher #10 Helical (SST)	3
21	00-079414	Disc - Cover	6
22	SC-021-23	Mach. Screw 10-24 x 1/2 Slotted Rd. Hd. (SST)	3