HOBART

INSTRUCTION MANUAL

... with Replacement Parts

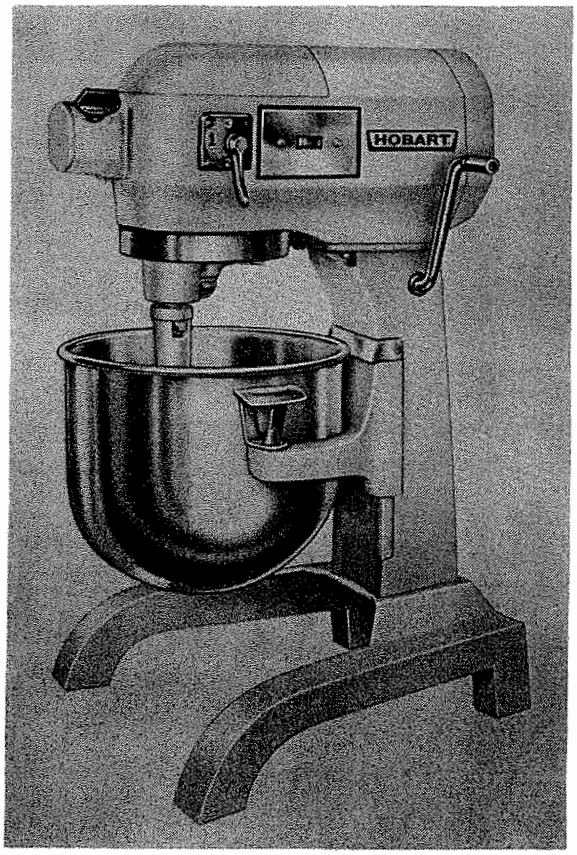

MODELS A-120 and A-120T MIXERS

ML-17666 - A-120
ML-17667 - A-120T

A product of HOBART CORPORATION TROY, OHIO 45374

FORM 10379D (Rev. 4-75) (Supsds. F. 10379C, 4-73)

- THIS PAGE INTENTIONALLY LEFT BLANK -

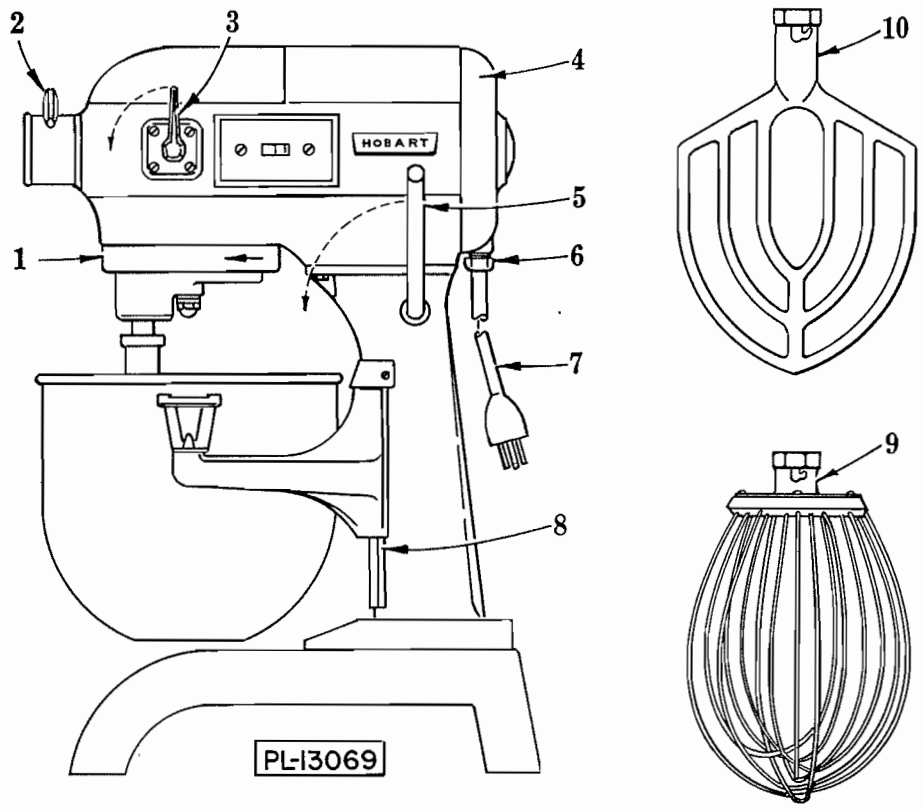

Fig. 1

Instructions for Operation and Care of MODELS A-120 AND A-120T HOBART MIXERS

INSTALLATION:

If cord and plug is not used with this machine, electrical connections should be made by qualified workmen who will observe all applicable Safety Codes and the National Electrical Code.

Before making electrical connections, CHECK THE SPECIFICATIONS ON THE NAME PLATE TO MAKE SURE THEY AGREE WITH THOSE OF YOUR ELECTRICAL SERVICE.

A cord and plug (7, Fig. 1) is furnished as standard equipment on this mixer (except for three phase current). The electrical outlet (6, Fig. 1) is tapped for 1/2" conduit should a permanent installation be desired.

Multiphase motors should be connected so that the planetary will revolve in the direction of the arrow in the illustration.

OPERATION:

A-120:

Set the shifter handle (3, Fig. 1) at the desired speed and turn on the switch to start the motor.

A-120T:

To start the motor for non-timed operation, set the shifter handle (3, Fig. 1) at the desired speed, then set the timer on hold and turn on the switch. For timed operation set the timer for the desired time and then turn on the switch.

LUBRICATION:

The motor (4, Fig. 1) has grease packed ball bearings so will require little attention. The transmission gearing is packed with special grease that

will last for several years. When grease is needed for replacement, it should be ordered from your local Hobart Representative. Lubricate the bowl slideways (8, Fig. 1) occasionally by applying a small amount of oil or grease with the tip of the finger. Only mineral oils are suitable for this type of lubrication.

The polished drip-cup (1, Fig. 1) is a safe-guard to prevent any lubricant that might work out of the planetary gearing from dropping into the bowl. Remove the drip cup (by pulling straight down) once a month and wipe it clean.

SPEED CONTROL:

To change speeds, first turn off the motor, then move the shifter handle (3, Fig. 1) to the desired speed. In the illustration the shifter handle is set at number 3 or high speed.

Use number 3 speed for fast, light work as whipping cream, beating eggs and mixing thin batters.

Number 1 or slow speed is for heavy mixtures, like breakfast rolls, etc. Also use this speed for the food chopper attachment (see attachments). In many mixing operations it is customary to start on Number 1 and then change to a higher speed as the work progresses.

BOWL LIFT:

Pull the lift handle (5, Fig. 1) forward to lower the bowl. It is necessary to lower the bowl to change agitators, this also makes the bowl more accessible for filling. When raising the bowl, move the lift handle a little beyond the vertical center until you feel it touch the stop. To mash potatoes, or to cream butter, start with the bowl down and raise it slowly into working position, while the agitator is rotating.

AGITATORS:

When attaching an agitator the bowl must be in the down position. Slip the agitator up on the shaft and turn it until the driving pin in the shaft reaches the L-shaped slot in the agitator shank. Agitators of various styles are available, each suited to a particular job.

The style "B" beater (10, Fig. 1) is commonly used for thin batters, cakes, and mashing potatoes. The style "D" whip (9, Fig. 1) is best for whipping cream and beating eggs. Two other styles frequently used are the "E" dough arm for heavy bread doughs, and the "P" pastry knife for cutting shortening into flour for pastry.

ATTACHMENTS:

Some of the more popular attachments are the vegetable slicer and shredder, the food chopper, the fruit juice extractor, the salad oil tank, and the colander. The attachment socket is for the size 12 attachments. Before putting an attachment into the socket, stop the motor, then insert with a slight twist toward the left so that the stop stud in the attachment is tight against the side of the hole that receives it. When in place tighten the thumb screw (2, Fig. 1).

The attachment drive has three speeds, governed by the shifter handle (3, Fig. 1) of the mixer. For most attachments set the handle at number 1. Set the speed at number 3 for the tool grinder. THE CHOPPER ATTACHMENT MUST NEVER RUN FASTER THAN SPEED 1 when cutting meat, but when cutting vegetables it may run at the number 2 speed. Use the motor switch to start and stop attachments, and always stop the motor before changing the speed of an attachment.

MOTORS:

Motor parts are listed on separate Motor Parts Sheet.

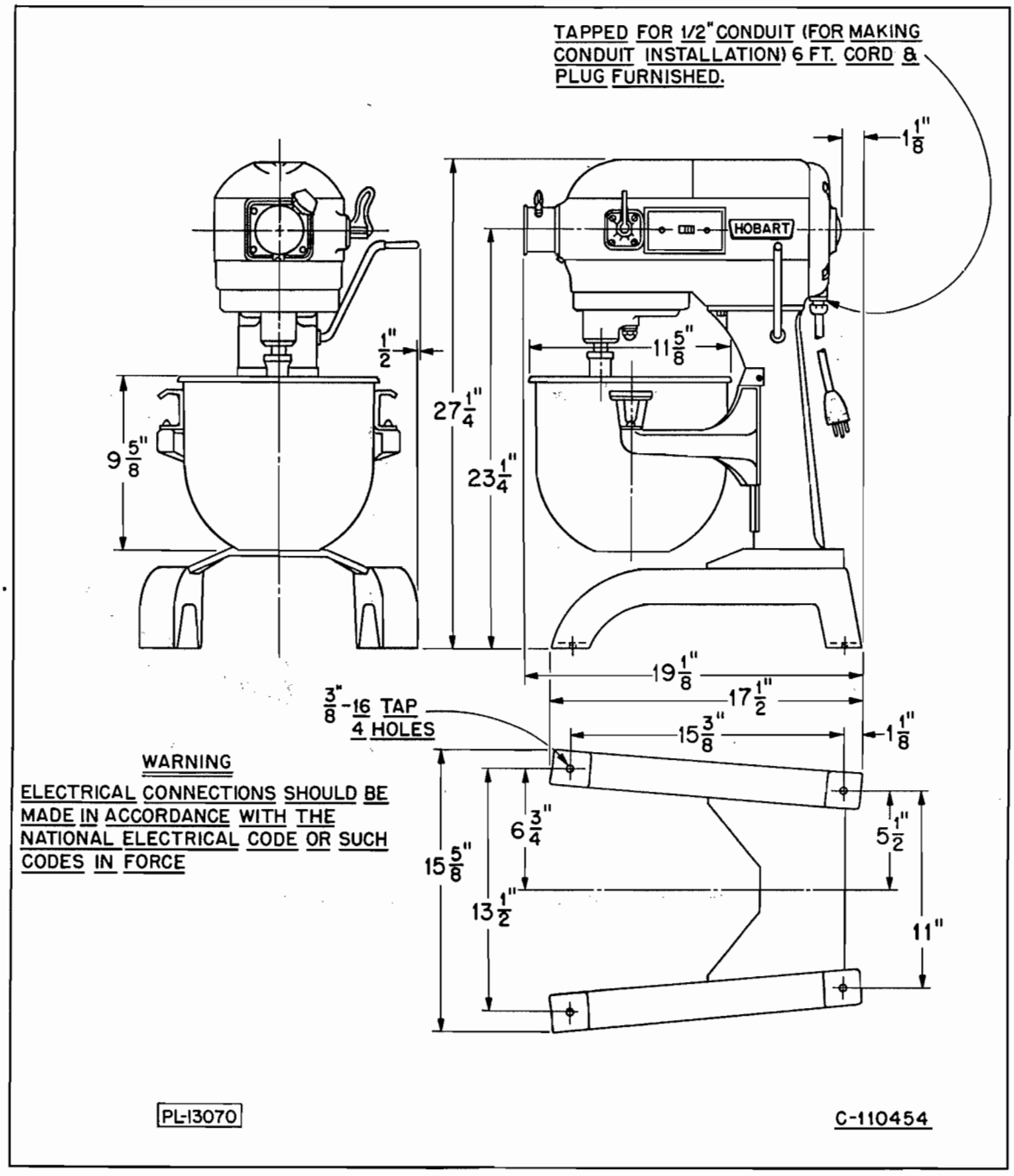

INSTALLATION DIAGRAM

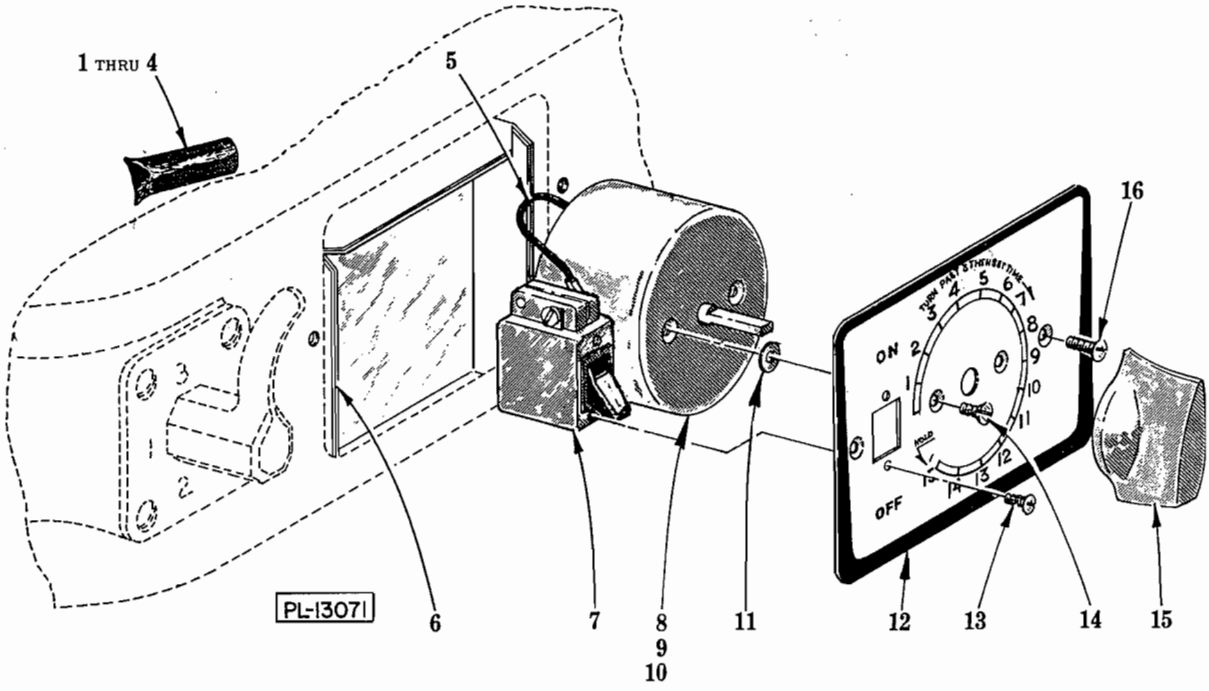

SWITCH, TIMER AND CONTROL UNIT

SWITCH, TIMER AND CONTROL UNIT

ILLUS. PL-13071	PART NO.	NAME OF PART	AMT.
1	M-61285-1	Boot - Insulating (Cord & Plug)	2
2	SC-27-28	Mach. Screw - #8-32 x 1/4" Rd. Hd.	2
3	WL-10-1	Lock Washer - #8 Ext. Shakeproof	2
4	NS-10-11	Mach. Nut - #8-32 Hex	2
5	C-87532-9	Lead Wire Assy. (Timer to Switch)	1
6	P-70782	Insulator - Switch	2
7	P-87711-98-1	Switch (Incls. item #13)	1
8	A-114720	Timer & Knob Assy. (Incls. items #9, 14 & 15)	1
9	SC-19-36	Mach. Screw - #6-32 x 1/4" Bind. Hd.	2
10	WL-10-22	Lock Washer - #6 Ext. Shakeproof	2
11	WS-2-18	Washer (Between Timer & Plate)	2
12	C-117876	Plate - Switch	1
13	SC-9-87	Mach. Screw - #3-48 x 1/4" Rd. Hd.	2
14	SC-13-7	Mach. Screw - #5-40 x 1/4" Flat Hd.	2
15	B-114703	Knob - Pointer	1
16	SC-15-8	Mach. Screw - #6-32 x 1/4" Oval Hd.	2
	M-71291-2	Conversion Kit (A-120 to A-120T) (3 Conductor Cord) (1 Ph. ONLY) (Incls. items #1 thru 16)	1

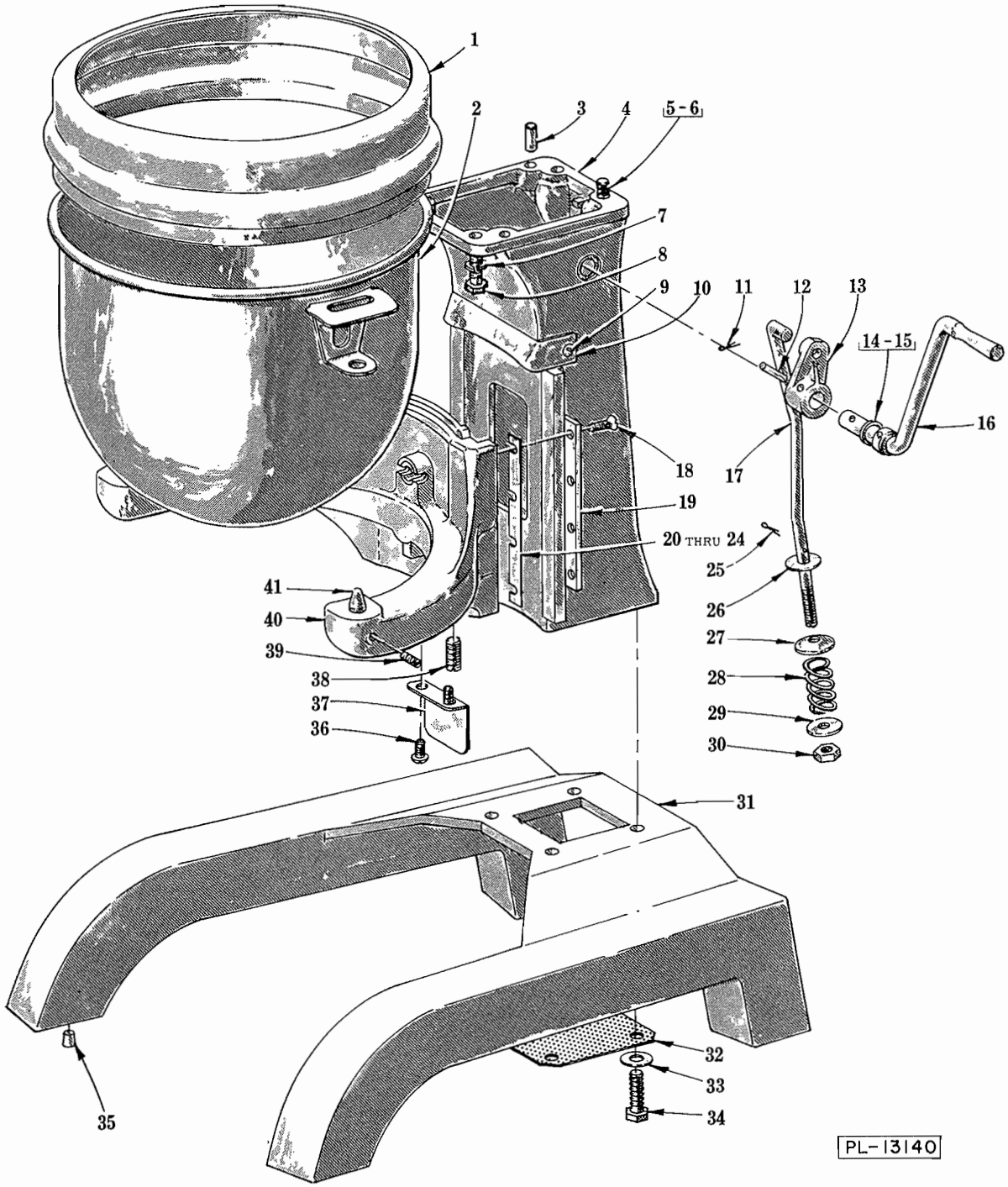

BASE, PEDESTAL AND BOWL UNIT

BASE, PEDESTAL AND BOWL UNIT

ILLUS. PL-13140	PART NO.	NAME OF PART	AMT.
1	R-86069-1	Cover - Splash (12 Qt.)	1
2	S-12667	Bowl Assy. (12 Qt.)	1
3	D-11800-116	Dowel	2
4	T-78634	Pedestal	1
5	SC-8-92	Mach. Screw - 5/16"-18 x 1" Rd. Hd.	2
6	WL-3-43	Lock Washer - 5/16" x .117" x .056"	2
7	WL-3-43	Lock Washer - 5/16" x .117" x .056"	2
8	SC-36-27	Fin. Bolt - 5/16"-18 x 1" Hex Hd.	2
9	SC-10-32	Mach. Screw - #8-32 x 3/8" Truss Hd.	2
10	P-78506	Shield - Upper Splash	1
11	PC-3-55	Cotter Pin - 1/8" x 3/4"	1
12	PS-4-15	Spirol Pin - 1/4" Dia. x 1-1/8" Lg.	1
13	M-114430	Arm - Bowl Lift	1
14	WS-9-11	Washer (STL)	As Reqd.
15	WS-9-13	Washer (Fiber)	As Reqd.
16	P-114432	Bowl Lift Handle Sub-Assy.	1
17	P-12714	Rod - Bowl Lift	1
18	SC-13-49	Mach. Screw - #10-24 x 5/8" Flat Hd.	8
19	M-12715	Gib - Bowl Support	2
20	V-16388-1	Shim - Bowl Support (.003" Thk.)	As Reqd.
21	V-16388-4	Shim - Bowl Support (.009" Thk.)	As Reqd.
22	V-16388-5	Shim - Bowl Support (.005" Thk.)	As Reqd.
23	V-16388-6	Shim - Bowl Support (.0075" Thk.)	As Reqd.
24	V-16388-7	Shim - Bowl Support (.015" Thk.)	As Reqd.
25	PC-3-55	Cotter Pin - 1/8" x 3/4"	1
26	WS-6-33	Washer (STL)	As Reqd.
27	V-12745	Washer - Special	1
28	V-12782	Spring	1
29	WS-6-26	Washer (STL)	1
30	NS-13-26	Full Nut - 3/8"-24 Hex Fin.	1
31	E-110411	Base Assy.	1
32	B-108159	Screen - Air	1
33	WS-18-19	Washer	4
34	SC-62-42	Fin. Bolt - 3/8"-16 x 1" Hex Hd.	4
35	B-114992	Plug - Base (Plug for Foot Pads)	4
36	SC-60-56	Mach. Screw - #10-32 x 5/16" Rd. Hd.	2
37	P-78505	Shield - Lower Splash	1
38	SC-83-16	Set Screw - 7/16"-14 x 7/8" Hdls., Oval Pt.	1
39	V-5014-1	Stud - Ice Jacket Hook	2
40	M-24870	Bowl Support Sub-Assy. Unit (Incls. items #20, 21, 24, 36, 37, 38 & 41)	1
41	V-6938-2	Pin - Bowl Locating	2

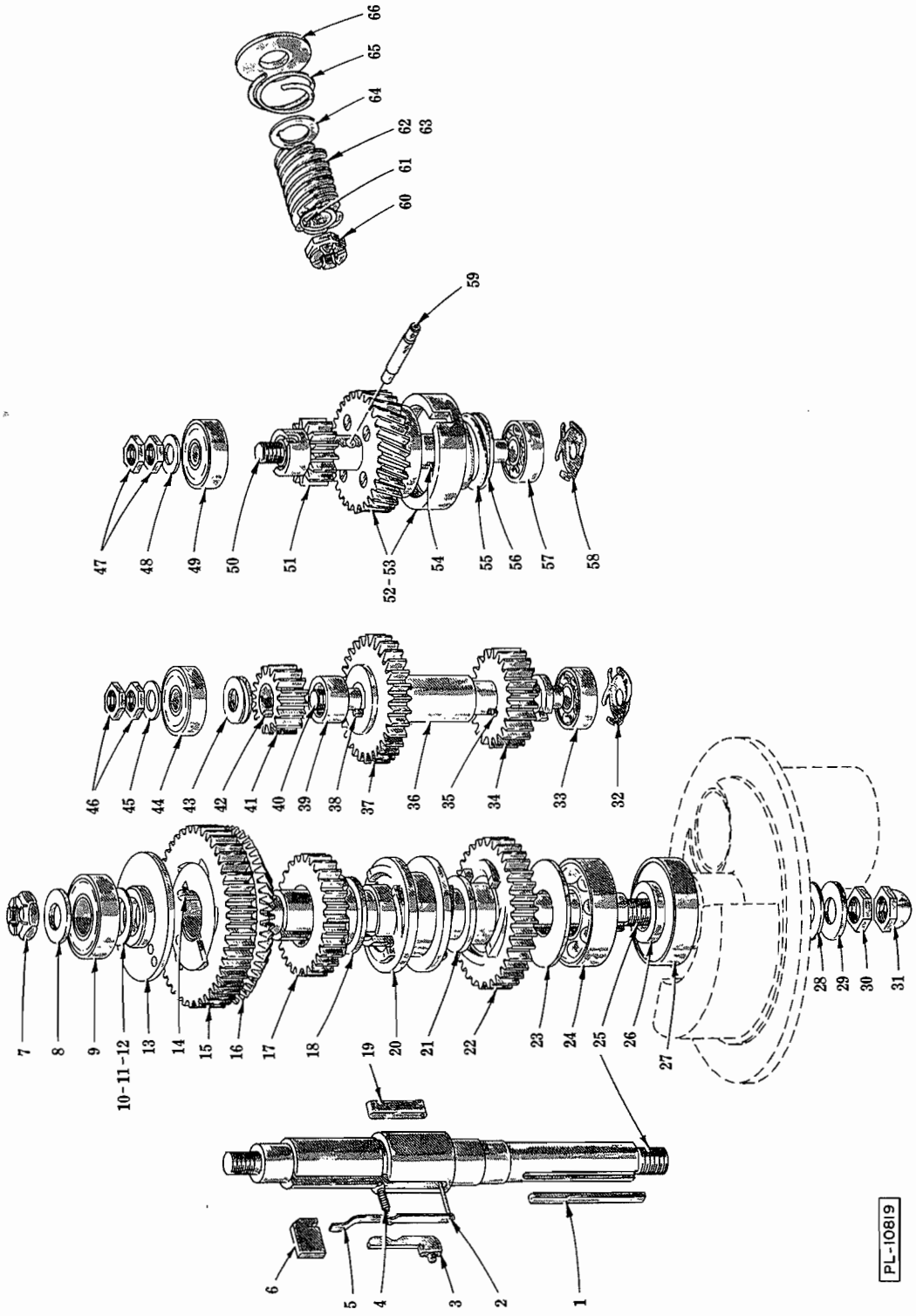

TRANSMISSION GEAR UNIT

TRANSMISSION GEAR UNIT

ILLUS. PL-10819	PART NO.	NAME OF PART	AMT.
1	R-12430-18	Key	1
2	V-113373-2	Rivet	1
3	M-13024	Block - Diving Key Control	1
4	V-12759	Spring	1
5	V-12749	Arm - Diving Key Control	1
6	M-15528	Key - Diving	1
7	NS-32-29	Stop Nut - 1/2"-20 "Flexloc"	1
8	WS-8-13	Washer - Retaining	1
9	BB-20-18	Ball Bearing - N.D. #77503	1
10	WS-10-18	Shim - Brg. (.002" Thk.)	As Reqd.
11	WS-10-19	Shim - Brg. (.003" Thk.)	As Reqd.
12	WS-10-20	Shim - Brg. (.010" Thk.)	As Reqd.
13	A-102777	Spacer & Pin Assy.	1
14	R-12430-59	Key	1
15	C-15225	Gear - Slow Speed (46T)	1
16	P-18800	Gear - Zerol Bevel (46T)	1
17	C-12694	Gear - Clutch (29T)	1
18	M-12695	Bearing - Clutch Gear	1
19	V-16577	Key - Special Feather	1
20	C-12703	Sleeve - Clutch	1
21	M-12695	Bearing - Clutch Gear	1
22	C-12696	Gear - Clutch (38T)	1
23	M-12723	Spacer - Lower	1
24	BB-20-6	Ball Bearing - N.D. #7504	1
25	R-12750	Shaft - Center	1
26	M-14674	Spacer - Bearing	1
27	A-114695	Seal - Oil	1
28	WS-7-26	Washer (Fiber)	1
29	WS-24-1	Washer - Retaining (STL)	1
30	V-10928-2	Nut - 1/2"-20 Special	1
31	M-24715-3	Acorn Nut - 1/2"-20	1
32	SL-2-8	Spring - Preloading	1
33	BB-5-1	Ball Bearing - N.D. #3200	1
34	C-12699	Gear (23T)	1
35	C-109070-18	Key	1
36	V-12697	Spacer - Lower	1
37	C-12700	Gear (32T)	1
38	C-109070-18	Key	1
39	V-12698	Spacer - Central	1
40	M-12717	Shaft - Transmission	1
41	C-103960	Gear (15T)	1
42	C-109070-18	Key	1
43	V-12744	Spacer - Upper	1
44	BB-5-2	Ball Bearing - N.D. #7500	1
45	WS-6-8	Washer - Retaining	1
46	V-12710	Nut - Retaining	2
47	V-12710	Nut - Retaining	2
48	WS-6-8	Washer - Retaining	1
49	BB-5-2	Ball Bearing - N.D. #7500	1
50	M-12725	Shaft - Worm Gear	1
51	C-12719	Gear (15T)	1
52	M-86525-1	Lower Release, Worm Wheel & Hub Sub-Assy. (29T) (60 Hz.)	1
53	M-86525-2	Lower Release, Worm Wheel & Hub Sub-Assy. (24T) (50 Hz.)	1
54	R-12430-1	Key	1
55	M-12724	Spring - Friction Drive	1
56	WS-9-28	Washer	1
57	BB-5-1	Ball Bearing - N.D. #3200	1
58	SL-2-8	Spring - Preloading	1
59	V-18431	Pin	1
60	NS-32-23	Stop Nut - 7/16"-20 "Flexloc"	1
61	V-12747	Key	1
62	C-12743	Worm (5T) (60 Hz.)	1
63	M-12770	Worm (5T) (50 Hz.)	1
64	V-12754	Washer	1
65	V-12757	Spring - Shock Absorber	1
66	V-12711	Washer - Shock Absorber Spring	1
	P-24551	Center Shaft Assy. Unit (Incls. items #2, 4, 5, 19 & 25)	1
	M-24861-1	Worm Gear Shaft Sub-Assy. Unit (60 Hz.) (Incls. items #50, 51, 52, 54, 55, 56 & 59)	1
	M-24861-2	Worm Gear Shaft Sub-Assy. Unit (50 Hz.) (Incls. items #50, 51, 53, 54, 55, 56 & 59)	1

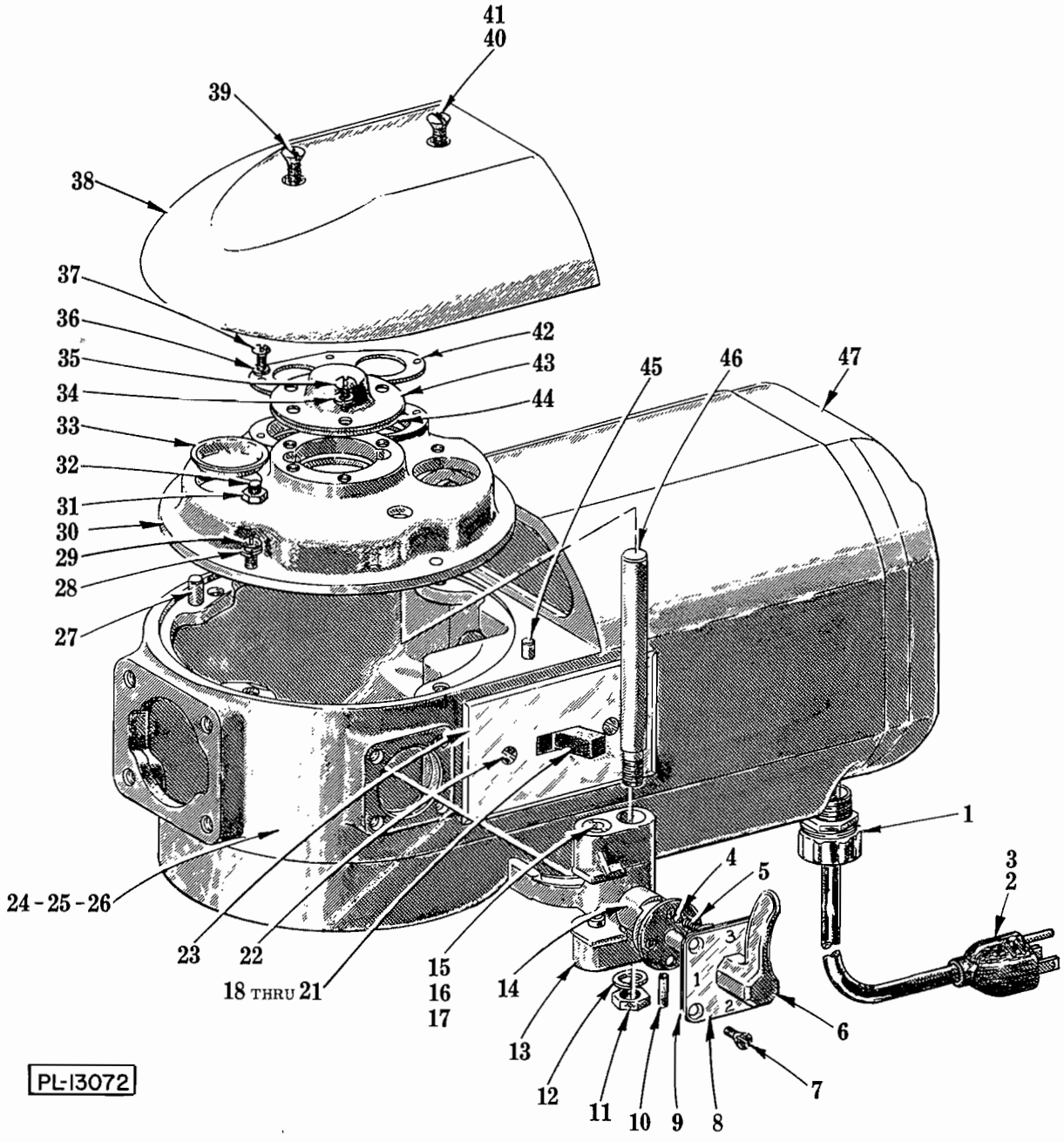

TRANSMISSION CASE AND SHIFTER UNIT

TRANSMISSION CASE AND SHIFTER UNIT

ILLUS. PL-13072	PART NO.	NAME OF PART	AMT.
1	FE-6-31	Connector - Strain Relief	1
2	B-117542-7	Cord & Plug Assy. (3 Cond., Under 150 V.)	1
3	B-117542-12	Cord & Plug Assy. (3 Cond., 200-250 V.)	1
4	BA-2-9	Ball - 1/4" Dia.	2
5	V-111170	Spring - Detent	2
6	C-114505	Handle - Shifter	1
7	SC-30-24	Mach. Screw - #10-24 x 1/2" Oval Hd.	4
8	P-12726-1	Plate - Shifter Index	1
9	M-23946	Gasket - Shifter Index Plate	1
10	PS-3-8	Spirol Pin - 1/8" Dia. x 3/4" Lg.	1
11	NS-13-22	Full Nut - 3/8"-16 Hex Fin.	1
12	WL-4-2	Lock Washer - 3/8" x .136" x .070"	1
13	P-13160	Yoke - Shifter	1
14	B-114506	Cam - Gear Shifter	1
15	V-12733	Plunger - Shifter Yoke	2
16	V-12734	Spring - Shifter Yoke	2
17	V-12732	Retainer - Spring (Shifter Yoke)	2
18	P-87711-99-4	Switch (1 Ph.)	1
19	P-87810-19-1	Switch (D.C.)	1
20	P-16504	Insulator - Switch	2
21	M-74835	Screw - Switch Mounting	2
22	SC-30-6	Mach. Screw - #6-32 x 3/8" Oval Hd.	2
23	B-103118	Plate - Switch	1
24	E-118039	Case - Transmission	1
25	PL-3-14	Plug - 15/16" Dia. Expansion	1
26	PL-3-28	Plug - 1-5/16" Dia. Expansion	1
27	D-11800-116	Dowel	1
28	WL-3-28	Lock Washer - #12 x .062" x .047"	4
29	SC-8-51	Mach. Screw - #12-24 x 3/4" Rd. Hd.	4
30	P-67750	Transmission Shaft Support and Screw Assy. (Incls. items #31 & 32)	1
31	NS-9-36	Mach. Nut - #12-24 Hex	1
32	SC-8-56	Mach. Screw - #12-24 x 1-1/2" Rd. Hd.	1
33	M-64871	Plug - Friction	2
34	WL-3-28	Lock Washer - #12 x .062" x .047"	3
35	SC-8-48	Mach. Screw - #12-24 x 1/2" Rd. Hd.	3
36	WL-3-22	Lock Washer - #10 x .055" x .040"	4
37	SC-7-74	Mach. Screw - #10-24 x 3/8" Rd. Hd.	4
38	S-18231-1	Cover - Transmission Case	1
39	SC-13-73	Mach. Screw - #12-24 x 1-1/4" Flat Hd.	1
40	SC-13-74	Mach. Screw - #12-24 x 1-1/2" Flat Hd.	1
41	NS-9-36	Mach. Nut - #12-24 Hex	2
42	M-12708	Retainer - Twin Bearing	1
43	M-20394-1	Cap - Bearing Retainer	1
44	M-20395	Retainer - Bearing	1
45	D-11800-61	Dowel	2
46	M-12735	Rod - Shifter Guide	1
47	---	Motor (see separate Motor Parts Sheet)	1

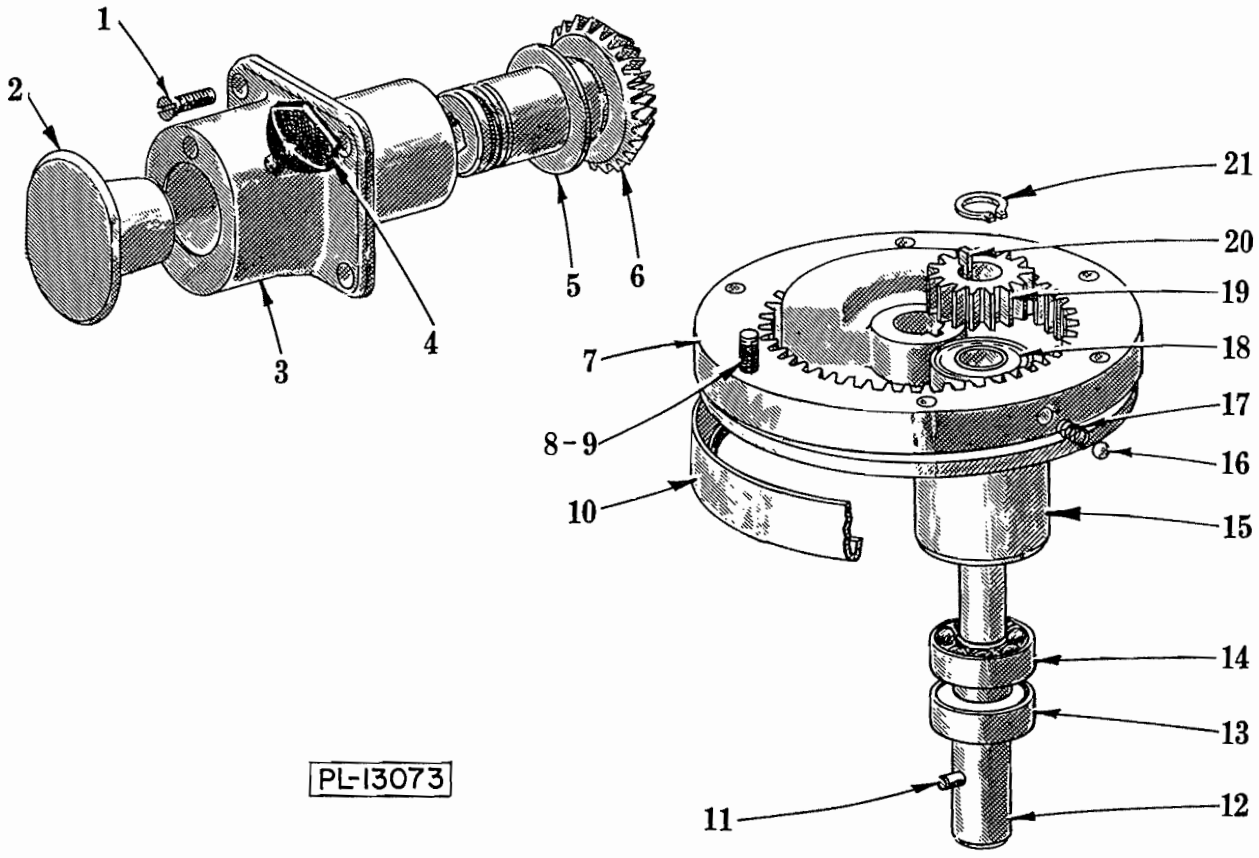

PLANETARY AND ATTACHMENT HUB UNIT

PLANETARY AND ATTACHMENT HUB UNIT

ILLUS. PL-13073	PART NO.	NAME OF PART	AMT.
1	SC-13-71	Mach. Screw - #12-24 x 3/4" Flat Hd.	4
2	C-114832-2	Plug - Attachment Hub	1
3	R-12686-1	Hub - Attachment	1
4	C-108197-1	Thumb Screw Assy.	1
5	M-12746	Washer - Thrust (Give Thk.)	As Reqd.
6	M-24889	Zerol Bevel Drive Gear (35T) & Plug Sub-Assy. Unit	1
7	P-12682	Internal Gear Sub-Assy. Unit (56T) (Incls. items #16 & 17)	1
8	SC-40-84	Cap Screw - 1/4"-20 x 7/8" Soc. Fil. Hd.	6
9	WL-3-35	Lock Washer - 1/4" x .047" x .078"	6
10	P-12684-1	Cup - Drip	1
11	M-65062-2	Pin	1
12	B-113949	Agitator Shaft Sub-Assy. Unit (Incls. item #11)	1
13	M-23481	Seal - Oil (13/16" I.D.)	1
14	BB-17-12	Ball Bearing - N.D. #7503	1
15	C-113953	Planetary	1
16	BA-2-9	Ball - 1/4" Dia.	2
17	V-7094	Spring	2
18	BB-17-12	Ball Bearing - N.D. #7503	1
19	V-12683	Pinion - Beater (17T)	1
20	R-12430-48	Key	1
21	RR-4-18	Retaining Ring	1

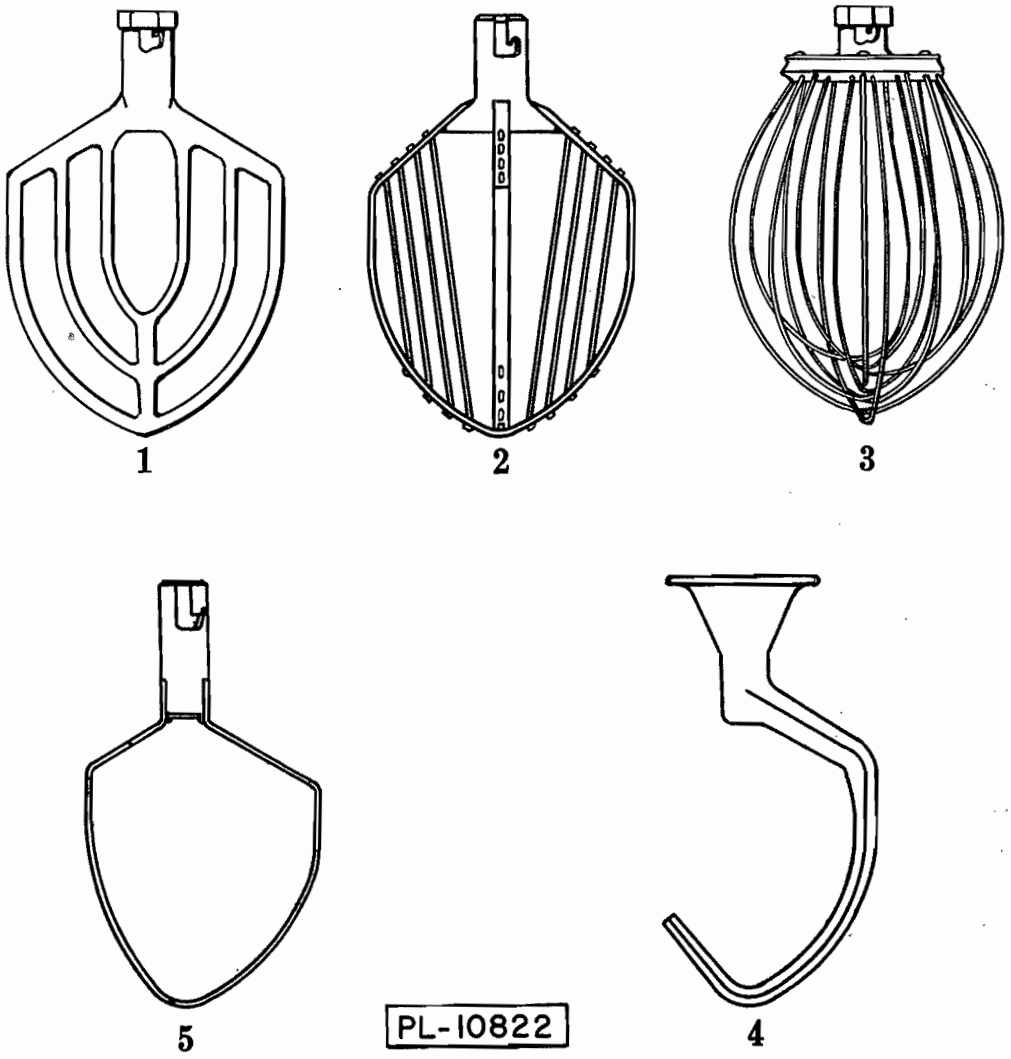

AGITATORS

ILLUS. PL-10822	PART NO.	NAME OF PART	AMT.
1	R-23493	"B" Flat Beater	1
2	R-23867	"C" Wing Whip	1
3	R-23527-1	"D" Wire Whip	1
4	S-23501	"E" Dough Arm	1
5	R-18370	"P" Pastry Knife	1